SLOPED ROOF WINDOWS
Supply and fit new Timber velux windows or similar and approved laid out to match plan layouts and elevations.

Note:– All panes of glass with any part less than 800mm above FFL. Or within 300mm of any type of doorway. Must have the double glazed units formed with 2 sheets of 6.4mm laminated glass or toughened glass all clearly marked.
NOTE: The overall U–value of every window must be not higher than 1.0 W/m2. A certificate is to be obtained from supplier to issue to Towers for signing off to building control.

ROOF TIES.
Fit standard 30x5mm galvanised mild steel straps at 1800mm centres nailed to joists and screwed to walls.

PRETREATMENT TO STRUCTURAL TIMBER
All structural timber to be tanonised prior to delivery to site.
All structural timber to comply with B.S.5268.

JOIST HANGERS, Ties ETC. To be "Simpson Strong ties" or similar and approved. All installed strictly to manufacturers instructions

NEW PITCHED ROOF CONSTRUCTION.
Fit 100x50mm Wall plates on new walls and tied down with roof ties as below
Rafters 150x50 C24 @ max 400 c/c
Double RafterTrimmers positioned as drawing birds mouthed and spiked to wall plates
All timber to be C24 grade.
to be fixed to 150x50 C24 wall plate bolted to upper wall with M16 Chemical fixings at max 600 c/c as section.

PITCHED ROOF COVERING
Prepare trusses with tilting fillet for bottom tiles. Lay 600mm strip of reinforced roofing felt to lap under bottom of main felt into gutter. Cover roof completly with Klober Permo" breatherable felt. Lay 38x25mm tannonised battons gauge as specified by Tile manufacturer. Lay Plain concrete tiles see elevations all fitted to manufacturers instructions.

RAINWATER GOODS
To be Deep flow plastic fittings all from the same manufacturer and installed strictly to manufacturers instructions.

FLASHING.
Provide and securely fix code 4 lead flashings at all tiling joints provide a good water tight joint.

FASCIA & SOFFIT
NOTE open eaves detail showing ends of rafters or false ends of rafters. see section details.

Floor Legend
- joist hanger
- Posi–joist
- Proposed Keystone lintel

WINDOWS
Supply and fit new UPVC or Timber windows laid out to match plan layouts and elevations. Where marked ESCAPE WINDOW the opening section must have an unobstructed opening area of 0.33m2 with both horizontal & vertical measurements being not less than 450mm, and the max cill height to be not more than 1100mm above FFL. (Even where not marked it is advisable where practical to have an external escape route from all habitable rooms.) All glazing to be double glazed with Low–E, en=0.15 glass (ie Pilkington K Glass or similar and approved.) With minimum 16mm clear air gap to achieve a U Value of 1.5W/m2K. Max
Note:– All panes of glass with any part less than 800mm above FFL. Or within 300mm of any type of doorway. Must have the double glazed units formed with 2 sheets of 6.4mm laminated glass Low–E, en=0.15 (ie Pilkington K Glass or similar and approved.) With minimum 16mm clear air gap Max

All windows to comply part Q building regulation and to meet security requirements of PAS24: 2012 Refer to Manual 1

GLAZING TO NEW DOORS AND WINDOWS.
Glazed door panels to be minimum double glazed sealed unit with 2 layers of 6.4mm laminated glass.

All glazing below 800mm above finished floor level to double glazed sealed units with 2 layers of 6.4mm laminated glass. Any glazing within 300mm of a door to be double glazed sealed units with 2 layers of 6.4mm laminated glass.

All Safety glazing to BS.6206.
All as the building regulations. All other glass to be as standard.

All glazing to comply part Q building regulation and to meet security requirements of PAS24: 2012 Refer to Manual 1

INTERNAL DOORWAYS
Door clear opening to be a min of 750mm when appoched head on or from a corridor min 1200mm wide. Or a min of 775 when approched from a corridor 1050mm wide. Or a min of 900 when approched from a corridor 900mm wide.

FIRE CHECK DOORS
FD20 — Fire check door and frame with intumescent strip. Hinges to be 3 No 102x36x3mm Steel butt hinges.

WASTES
Provide wastes as follows:–
Sink 38mm dia.
Dish washer 38mm dia
Washing Machine 38mm dia.
Basin 32mm dia.
Bath or Shower 38mm dia.
all with 75mm deep sealed traps
All combined waste to be either 50mm dia or to largest connecting pipe.
W.C.100mm dia
All sections of pipe to be accessable for rodding.

BACKGROUND VENTILATION.
Provide the following background ventilation. Formed with a conbination of air bricks and window trickle vents.
Habitable rooms 8000 sq mm
kitchen 5000 sq mm
Utility room 5000 sq mm
Bathroom 5000 sq mm

BATHROOM with Shower extract
Provide ant fit mechnical extract of minimum 15 Ltrs/second. Switched from and Humidistat. Wired through a switched spur at high level.
Note
All vents/extractors to be to outside air

AIR PERMEABILITY TEST.

At completion stage, complete an air permeability test by an appoved firm, confirm the test resuls comply with the Saps 2012 design level of 5.00
For all other Criterion on the Part L1A please see saps results design & as built.

PLEASE NOTE
Lateral straps to be position as layed out and shown in RED. This is the minimum amount of straps. The positions are approx as variations for other site factors may require slight repositioning of joists.

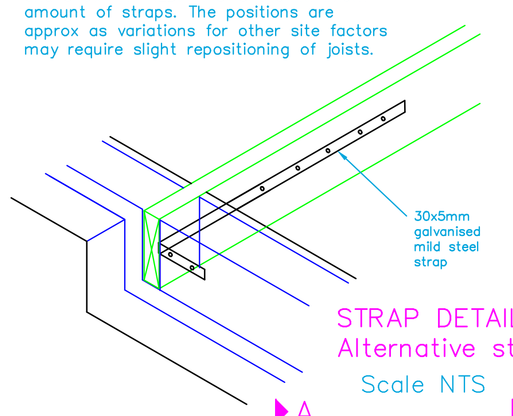

STRAP DETAIL 1
Alternative strap position
Scale NTS

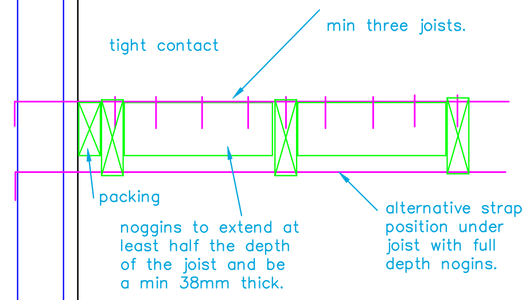

STRAP DETAIL 2.
Scale NTS

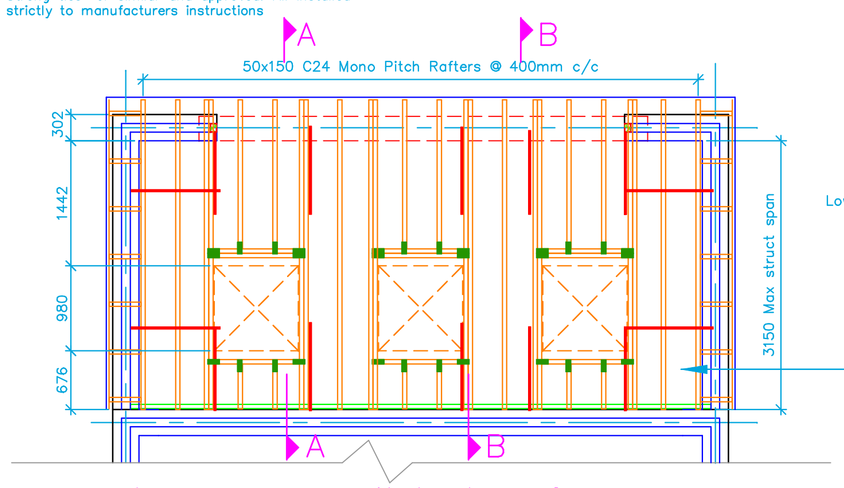

Lower mono pitched roof

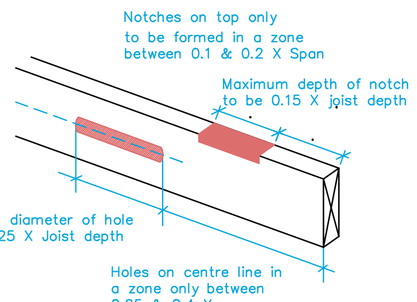

SERVICE HOLES THROUGH SOLID JOISTS.OR RAFTERS
Scale NTS

KEYSTONE STEEL LINTOLS
Over new door and window openings fit KEYSTONE STEEL LINTOLS for all new openings sized as plan layout notes.
All fitted to manufactures instructions.
Shown red dotted.

ENG FLOOR JOIST LAYOUT.
Provide and fit Posi Joists as Howard TRUSSES and JOIST Ltd design to BS5268. All fitted to manufacturers instructions. with all necessary fixings anchors, ties, bracings etc.
NOTE:
Structural details of Joists to be submitted & approved before fitting.

JOIST HANGERS, Ties ETC. To be "Simpson Strong ties" or similar and approved. All installed strictly to manufacturers instructions

Sound insulation to be complied with by filling the floor void with 150mm of rockwool insulation quilt. (Min density 70Kg/m3)

FLOOR DECKING
Fit 22mm T&G Grade Chipboard. All joints parallel with joist to beover joists or Supported on 50x50 noggings. Perimeter to be supported on 50x50 noggins. All securely fixed.

Lateral & Vertical Straps
Fit standard 30*5mm galvanised mild steel straps at 1800mm centres nailed to joists and screwed to walls.

GROUND FLOOR CEILINGS
Fix direct to joists 12.5mm soundbloc Plasterboard with tape joints and skim with plaster ready to paint.
All to give 1/2 hour fire protection.

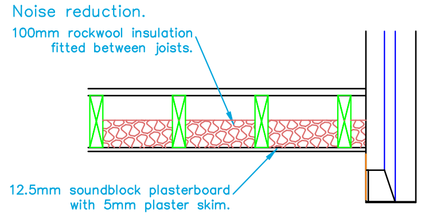

FLOOR DETAIL
Scale NTS

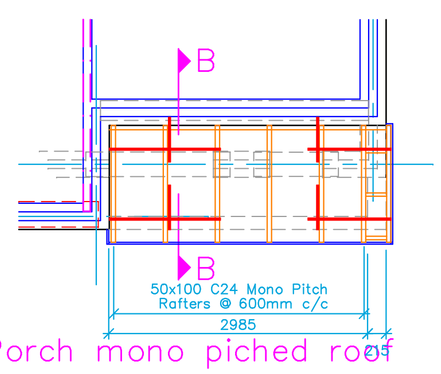

Porch mono piched roof

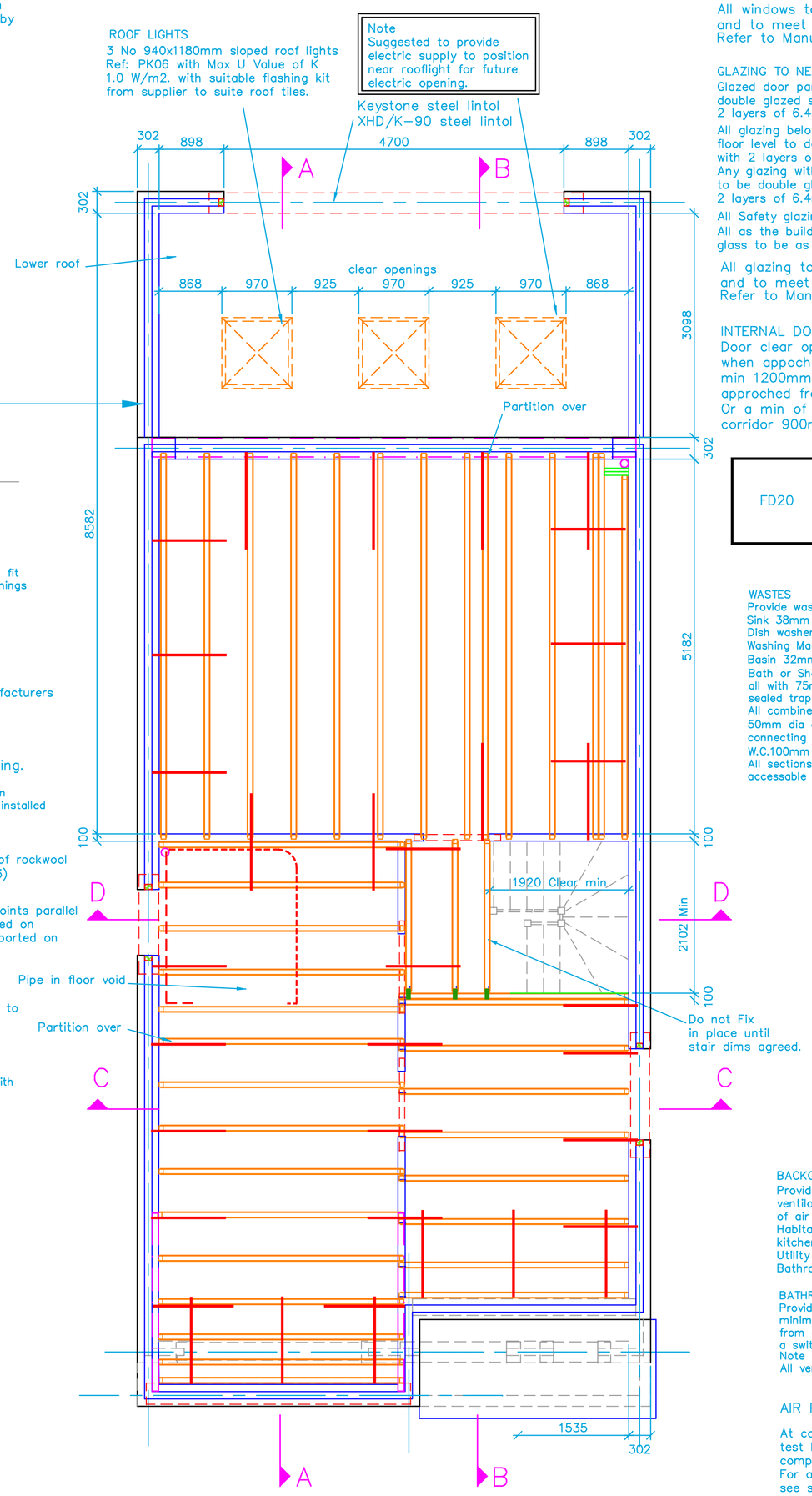

First floor carcassing layout
Posi Joist layout to be designed by manfacturer and approved in writing by LA before ordering. Minera Ref 21/4803A
Check dimension on site before ordering trusses.

If there is any change on truss roof layout, inform Towers. Lintel layout may need revising.

0 500mm 2.5M 5M
250mm 1M

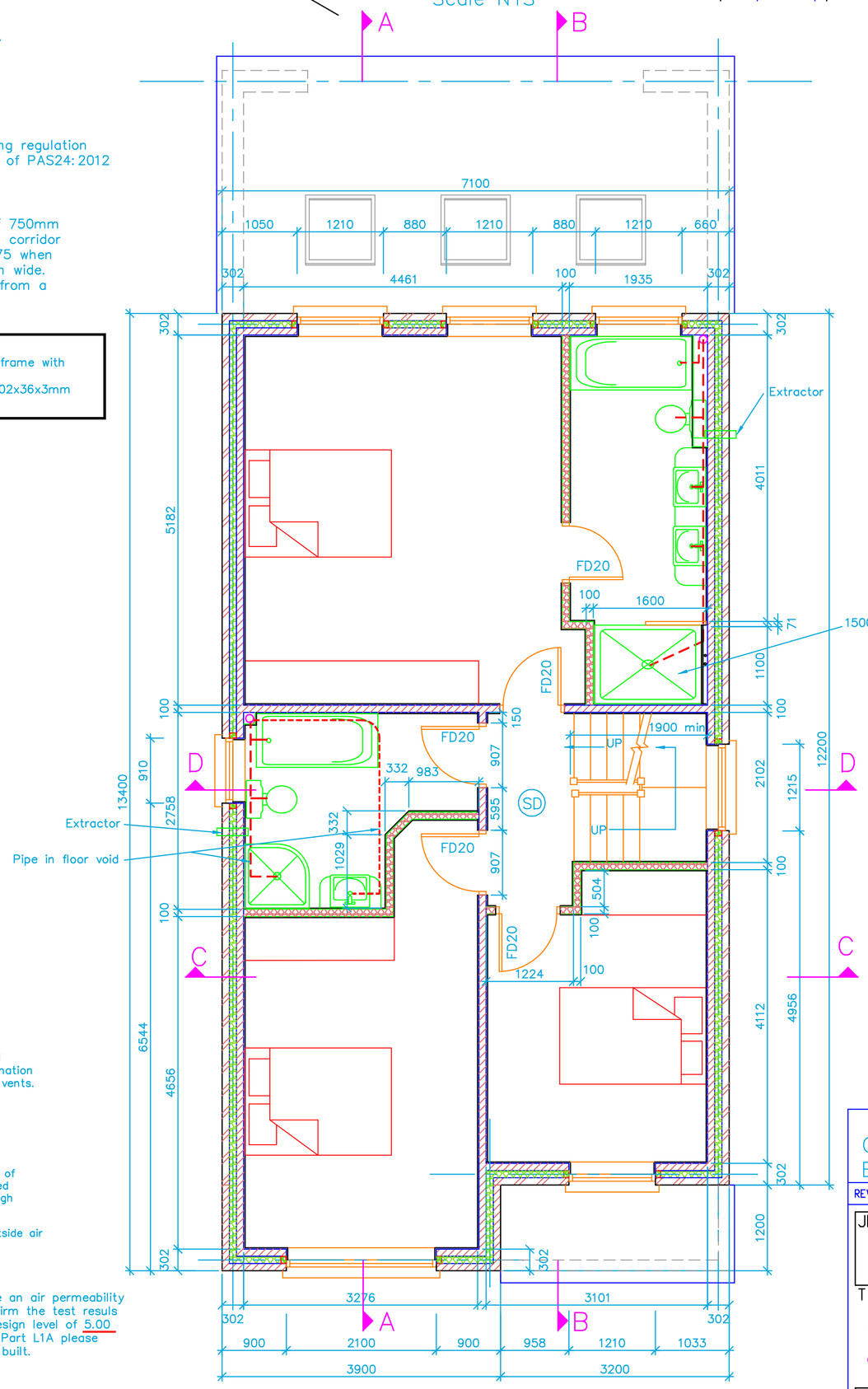

First floor layout

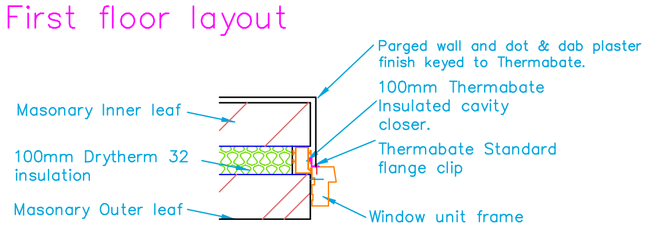

CAVITY CLOSER DETAIL
SCALE 1:10

SD — Fit mains powered & battery backup smoke detectors min 300mm away from walls & lights. all to be linked together to operate simultaneously. All to BS 5446.

1. Do not scale from this drawing.
2. All dimensions to be checked on site before ordering materials or commencing work.
3. In case of discrepancies in drawings, calculations or details refer to TOWERS ASSOCIATES. for clarification: Unilateral decisions by contractors will not be accepted.
4. For any information not covered by these drawings refer to TOWERS ASSOCIATES. for clarification: Unilateral decisions by contractors will not be accepted.
5. The contractor must ensure that work is being carried out to the latest revisions of all the working drawings.
6. It is the contractors responsibility to inform the local authority before work commences on site, and at all prescribed stages of work. All to the District Surveyors satisfaction.
7. If work commences on site before full plans approval has been given, TOWERS ASSOCIATES accept no responsibility for any additional work or materials that the District Surveyor may require.
8. This drawing and all copies produced there from remain the copyright and property of TOWERS ASSOCIATES. It may only be reproduced by TOWERS ASSOCIATES and all copies must be returned to TOWERS ASSOCIATES if demanded.

By using this drawing the user and his or her employer signify their agreement of the above terms and conditions.

NHBC Please note
All materials used and construction work completed on this project is to comply with all curent NHBC standards and all other current codes of practice & legislation. If any items on this drawing are found to contradict with this please notify TOWERS ASSOCIATES immediately.

Check all dimensions on site before work proceeds.

ALL PRODUCTS.
To be BBA approved and fitted strictly to manufacturers instructions. Any discrepance with Towers notes must be reported to Towers before use or if possible before ordering.

REV.	DATE	DESCRIPTION
C	Jun 22	Family bathroom revised
B	May 22	Family bathroom revised

JOB 188 Bury St.
Ruislip. HA4 7TJ

TITLE
First Floor Carcassing and First floor layout

DRG. No. 3284–12 REV. C

SCALE 1:50 | © Copyright 2021 | DRN. BY JDS
DATE Dec 21
CHECKED PDN
DATE Dec 21

TOWERS ASSOCIATES
Harefield Oil Terminal, Harvil Rd, Harefield, MIDDX. UB9 6JL.
FAX. 01895 814664
TEL. 01895 812822