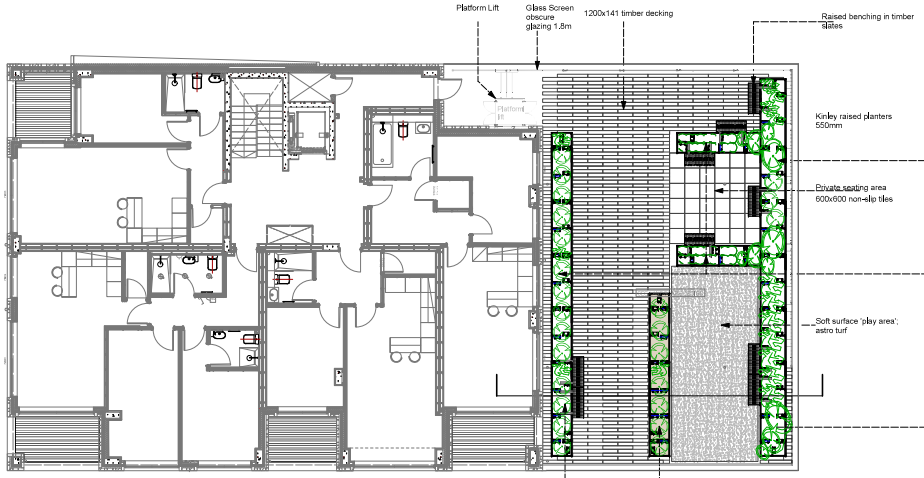

First Floor

Viburnum Tinus 'Eve Price' 60/90cm 10L pot [6no.]

Box hedging or Buxus sempervirens - Box 20/ 30cm 2L - 3per meter [10no]

Plant Species: Buxus Microphylla 'Green Pillow' 14no, 10ltr pots

Plantation to be used - low planter.

Raised 350mm planter [low level] boarder plantation – mixture of Coral Bells (Heuchera) and Russian Sage (Perovkia Atriplicifolia), Plants to grow to 900mm (16no plants in total)

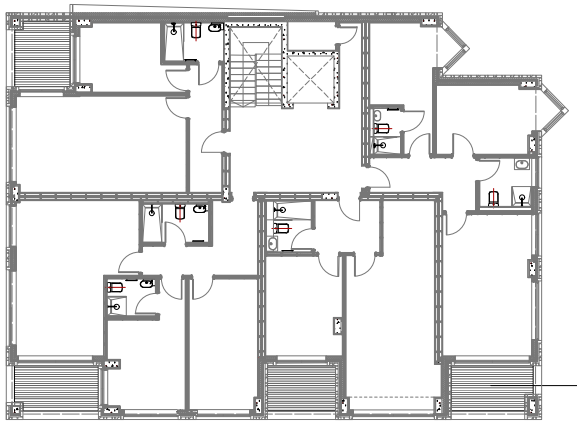

Balcony Areas to include composite decking on raised pedestals

Second Floor

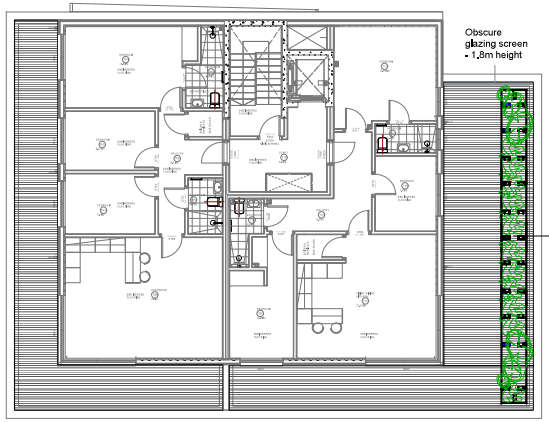

Third Floor

Viburnum Tinus 'Eve Price' 60/90cm 10L pot [6no.]

Box hedging or Buxus sempervirens - Box 20/ 30cm 2L - 3per meter [10no]

GLAZING BALUSTRADE - OBSCURE GLASS 1.8M

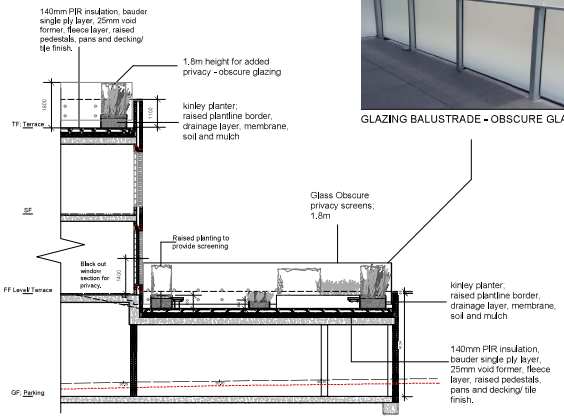

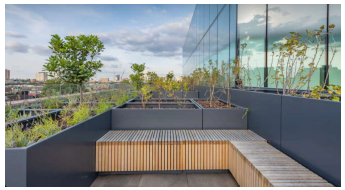

Raaft Terrace System

A terrace can easily be transformed into a garden with layers of interest and a feeling of permanence by adding planters. Surfaces include Atria Porcelain Tiles, and Farrino Porcelain Decking and are available in many styles, colours, effects and finishes.

3D View of planters and Decking

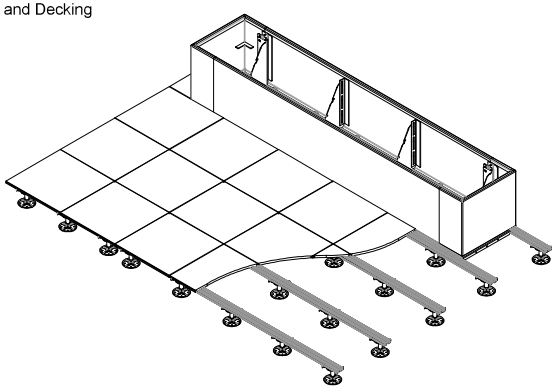

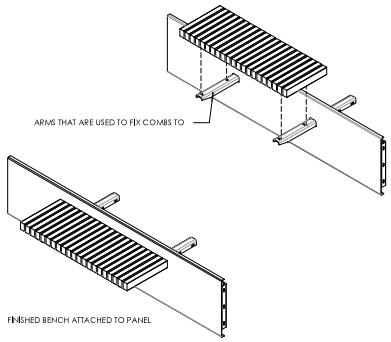

PLANNING CONDITIONS 10

All dimensions to be verified on site by contractors. Any discrepancies to be verified with the designer No scaled dimensions to be used only figured dimensions. Copyright of HSD Contractors to work to CDM 2015 if applicable

HSD	ARB RIBA		
Project:	STAR PUB DEVELOPMENT		
Title:	Condition 10 - Landscape Design		
SCALE	DRAWN:	REVISION	DATE
100 @ A1	H S SURI	Rev 01	12.08.22
	PG NO: DWG 05	Rev 02	13.08.22