PROPOSED FRONT ELEVATION
SCALE 1:100

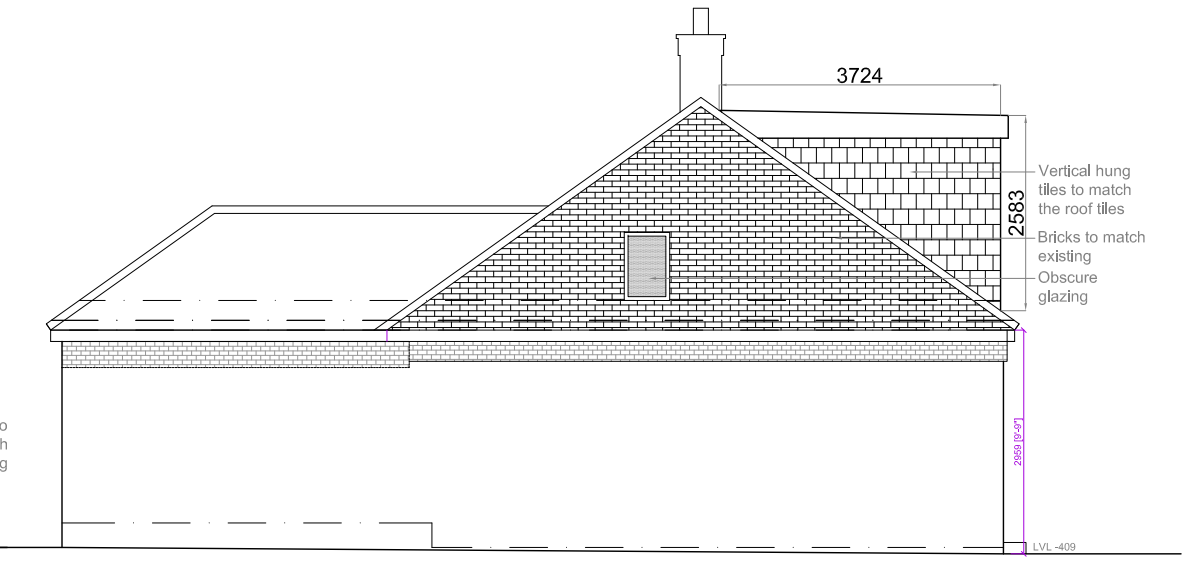


PROPOSED SIDE ELEVATION (VIEW FROM NO.104)
SCALE 1:100

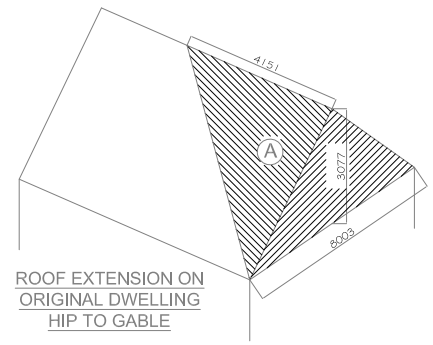


ROOF EXTENSION ON ORIGINAL DWELLING HIP TO GABLE

VOLUME OF HIP TO GABLE = ½ (4.151(D)X3.077(H)x 8.003(W)
= ½ (102.22)
= 17.03

PROPOSED REAR ELEVATION
SCALE 1:100

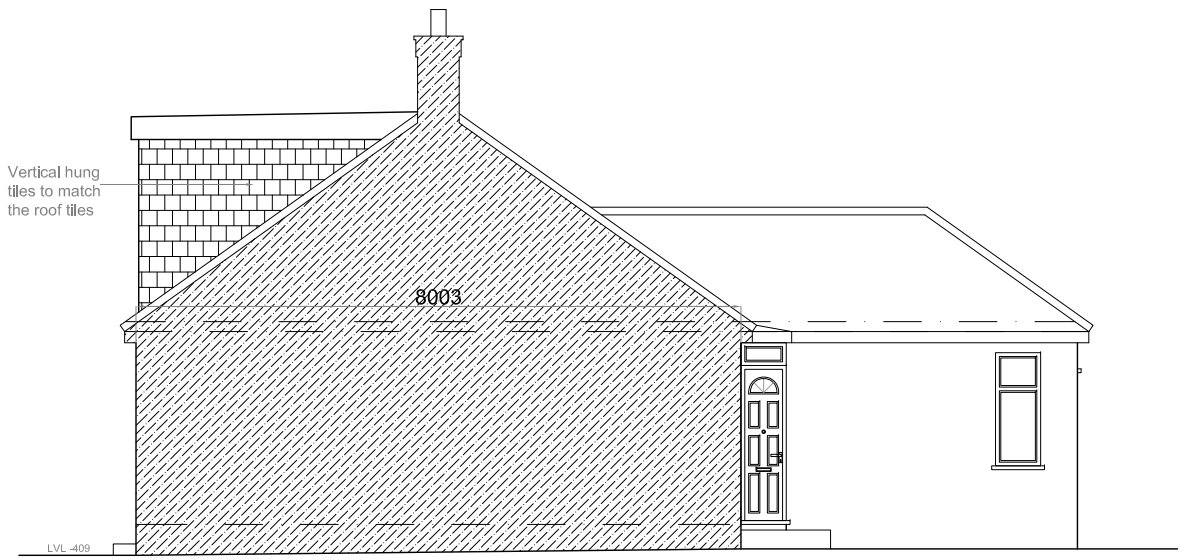


PROPOSED SIDE ELEVATION
SCALE 1:100

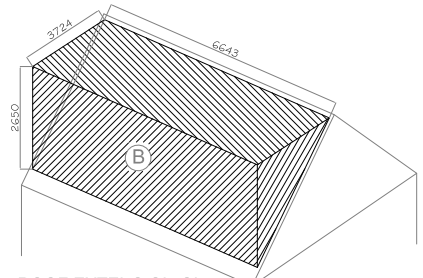


ROOF EXTENSION ON ORIGINAL DWELLING

VOLUME OF DORMER B = 3.724 (D)X 2.650(H)/2x 6.643(L)
= 65.56
= 32.78 cubic metres

TOTAL VOLUME A+B = 32.78 +17.03
< 49.81 cubic metres

THEREFORE THE PROPOSED LOFT CONVERSION IS WITHIN THE PERMISSIBLE VOLUME FOR A TERRACE DWELLINGHOUSE UNDER PERMITTED DEVELOPMENT

DEVELOPMENT IS PERMITTED BY CLASS B OF THE TOWN AND COUNTRY PLANNING (GENERAL PERMITTED DEVELOPMENT) (AMENDMENT) (NO. 2) (ENGLAND) ORDER 2008

a. AS A RESULT OF THE WORKS NO PART OF THE DWELLINGHOUSE WOULD EXCEED THE HEIGHT OF THE HIGHEST PART OF THE EXISTING ROOF

b. NO PART OF THE DWELLINGHOUSE WOULD EXTEND BEYOND THE PLANE OF ANY EXISTING ROOF SLOPE WHICH FORMS THE PRINCIPLE ELEVATION OF THE DWELLINGHOUSE AND FRONTS A HIGHWAY, WITH THE EXCEPTION OF THE ROOFLIGHTS WHICH ARE PERMITTED UNDER CLASS C

c. THE CUBIC CONTENT OF THE RESULTING ROOF SPACE WOULD NOT EXCEED THE THE CUBIC CONTENT OF THE ORIGINAL ROOF SPACE BY MORE THAN 40 CUBIC METRES.

d. THE WORKS WOULD NOT CONSIST OF THE CONSTRUCTION OF A VERANDA, BALCONY OR OTHER RAISED PLATFORM. IT WOULD CONSIST OF ALTERATIONS TO THE CHIMNEY WHICH IS PERMITTED UNDER CLASS G.

e. THE DWELLING IS NOT ON ARTICLE 1(5) LAND.

## GENERAL NOTES

All dimensions, levels, sizes, positions and locations of particulars as indicated on drawings are to be verified by the appointed Contractor on site prior to engaging in works.

Any discrepancies must be reported to the Architect/Surveyor/Engineer or responsible person/s immediately.

No dimension to be scaled from the drawings for construction purposes unless otherwise indicated. All work is to comply with current Building Regulations.

Party Wall etc. Act 1996 would apply and contractor is to assure that no work is commenced until this formality is completed.
The sole purpose of this drawing is the procurement of Planning Permission and Building Regulation approval and work is NOT to commence before such approvals.

Where this drawing is used for the works, contractor should request at the time of tender, from the tenderer, full specification and schedule of work. To avoid any disputes, this schedule of works in conjuction with the drawings would be used to resolve matters.
Contractor to assure and satisfy himself that necessary Planning permission and Building Regulations are approved before tendering or commencement of works.

The competent person is to send to the local authority via the scheme provider) a self-certification certificate within 30 days of the electrical works' completion. The client must receive both a copy of the self certificate and a BS7671 Electrical Installation Test Certificate. (Reg. P1)

The Gas and Boiler Installations will be carried out by a suitably qualified CORGI registered gas engineer or equal approved.

The Contractor is responsible for ensuring compliance with the CDM Regulations, and appropriate Health & Safety on site precautions.

SHAH DESIGNS LTD
+44 07985 433 242
15 Derwent Avenue, Pinner, HA5 4QH
darshikas@shahdesignsltd.co.uk
www.shahdesignsltd.co.uk

- Existing walls
- Existing walls to be demolished
- Proposed Partition wall
- Proposed cavity wall
- Proposed Beam to engineer's detail

0 1m 2m
Scale 1:100

0 1m
Scale 1:50

PROJECT
106 NORTH VIEW
PINNER
HA5 1PY

| REVISION | DESCRIPTION | BY | DATE |
|---|---|---|---|

DRAWING TITLE
PROPOSED ELEVATIONS

| | | | |
|---|---|---|---|
| DATE | 27.06.2025 | DRAWN BY | DS |
| SCALE | 1:100@A3 | CHECKED BY | DS |

DRAWING NO. / REVISION
SD2526(P)12