Trevor Heaps
Arboricultural Consultancy Ltd.

12 Plover Drive, Milford-on-Sea, Hampshire, SO41 0XF - Tel: 07957 763 533

Email: trevor@trevorheaps.co.uk • www. trevorheaps.co.uk

Arboricultural Impact Assessment
Method Statement & Tree Protection Plan
(to BS:5837 2012)

For

Yiewsley & West Drayton Leisure Centre, Rowhleys Place, Harmondsworth Road, West Drayton, UB7 9LU

Prepared for London Borough of Hillingdon

Prepared by Trevor Heaps BSc, MICFor, M. Arbor.A.

Date: 26th September 2019

Ref: TH 2122/B

Arboricultural ASSOCIATION Professional Member

Institute of Chartered Foresters Registered Consultant

Summary

It is proposed to demolish the youth centre and family centre and construct a new leisure centre with car park.

The proposals will require the removal of about 37 trees. To mitigate, at least 30 new trees will be planted post-construction.

Some basic tree protection measures and working methodology (in accordance with BS 5837:2012) will ensure the retained trees are not detrimentally affected during construction.

The relationship between the proposal and retained trees is sustainable and will not result in any unreasonable pressure to carry out inappropriate tree works.

If the proposal is implemented in accordance with the recommendations laid out in this report, neither the trees or wider landscape will be adversely affected.

This is an arboriculturally defensible scheme and there are no (arboricultural) reasons why planning consent should not be granted.

© Trevor Heaps Arboricultural Consultancy Ltd.

Contents

1.0 Introduction 1

2.0 Instruction 1

3.0 Drawings provided 1

4.0 Report context 1

5.0 Statutory tree protection 2

6.0 Ecological constraints 2

7.0 The site 3

8.0 The soil and topography 3

9.0 Arboricultural Impact Assessment (AIA) and Tree Protection Methods 3

10.0 Conclusions 7

11.0 The Arboricultural Method Statement (AMS) 7

12.0 Arboricultural supervision 9

13.0 Signature 10

Appendix 1 - Professional résumé 11

Appendix 2 - Tree data schedule 12

Appendix 3 - Tree data schedule explanatory notes 20

Appendix 4 – Specifications for tree protective measures 22

Appendix 5 – General precautions and further information 34

Appendix 6 - Procedure to follow in case of damage to retained trees 36

Appendix 7 - Induction form for all site personnel 37

Appendix 8 - Site inspection record 38

Appendix 9 - Tree Protection Plan ..... End of Report

© Trevor Heaps Arboricultural Consultancy Ltd.

1.0 Introduction

1.1 I am Trevor Heaps, Director of Trevor Heaps Arboricultural Consultancy Ltd. I have experience and qualifications in the field of Arboriculture. Further information is provided in Appendix 1.

1.2 Contact details:

Who	Name	Organisation	Details
Arboricultural consultant	Trevor Heaps	THAC Ltd. 12 Plover Drive, Milford-on-Sea, Hampshire, SO41 0XF	Tel: 07957 763 533 E-mail: trevor@trevorheaps.co.uk
London Borough of Hillingdon - LPA	Tree Officer	The London Borough of Hillingdon, Civic Centre, High Street, Uxbridge, UB8 1UW	Tel: 01895 556000 E-mail: trees@hillingdon.gov.uk

2.0 Instruction

2.1 We are to survey all significant trees that could be affected by the proposed construction works.

2.2 We are then to prepare a report to appraise the effect these works will have on any nearby trees and the surrounding landscape.

2.3 We are then to set out recommendations for the protection of the trees during development - in accordance with British Standard 5837:2012 'Trees in relation to design, demolition and construction – Recommendations' (BS5837).

3.0 Drawings provided

3.1 Proposed Site Plan – Ref. M9534/APL004/B – Dated August 2019 – Drawn by Hunters

4.0 Report context

4.1 The site was surveyed by Trevor Heaps on the 1st April 2019 and again on 7th May 2019..

4.2 The trees were surveyed from within the site at ground level. No climbed inspections were carried out and no root/soil samples were taken for analysis.

4.3 The trees were inspected based on the Visual Tree Assessment (VTA) developed by Mattheck & Breloer (The Body Language of Trees, 1994).

© Trevor Heaps Arboricultural Consultancy Ltd.

4.4 Tree heights, crown spreads and stem diameters were measured with a clinometer, a Disto laser measure and a diameter measuring tape respectively.

4.5 Small trees and shrubs (with stem diameters less than 75mm) were not surveyed.

4.6 This report is based on the information provided (i.e. site plans, proposed drawings, scales, measurements etc.) and observations during the site visit.

4.7 This report will support a planning application or an application to discharge a tree-related condition and its purpose is to assist and inform the planning process.

4.8 This report does not set out the detailed, working specifications of tree protection measures and engineering / design features, but provides enough detail to demonstrate the feasibility of the scheme in principle.

4.9 We were not instructed to investigate the statutory protection status of trees on or adjacent to the site (but have checked the LPAs website for any relevant information).

4.10 The report does not assess the potential influence of trees upon load-bearing soils beneath existing and proposed structures (resulting from water abstraction by trees on shrinkable soils).

5.0 Statutory tree protection

5.1 According to the LPAs website, these two sites are within the West Drayton Green Conservation Area.

5.1.1 This means that if any works are required to trees with a stem diameter of 75mm or above, then a Section 211 Notice must be served on the LPA (to give them six weeks' prior notice).

5.2 The sites are not covered by a Tree Preservation Order (TPO).

6.0 Ecological constraints

6.1 The Wildlife and Countryside Act 1981 (as amended by the Countryside and Rights of Way Act 2000) provides statutory protection to birds, bats and other species that inhabit trees.

6.2 In addition to any tree matters considered in this report, these protected animals could impose significant constraints on the use and timing of access to the site.

© Trevor Heaps Arboricultural Consultancy Ltd.

7.0 The site

7.1 These two sites are situated within a leafy, residential part of West Drayton.

8.0 The soil and topography

8.1 The soils at this site were determined using information provided by the British Geological Survey and observations during the site visit.

8.2 The site is flat, and the soil texture is silt to silty loam. The soil parent material is residual clay and loamy loess.

8.3 The soil is deep, and so a thick soil profile is likely. Soil (and any underlying parent Material) should be easily dug to a depth of more than one metre.

8.4 Given the information above, the soil has the potential of becoming compacted (which is harmful to tree roots).

9.0 Arboricultural Impact Assessment (AIA) and Tree Protection Methods

9.1 Table 1 lists the potential effects the construction works will have on the subject trees. Mitigation measures are discussed in more detail below, and this information should be read in conjunction with the supporting Tree Protection Plan (TPP). Further information on the subject trees is provided in Appendices 2 & 3.

Table 1: Potential effects on trees due to development

The impacts on trees due to this development	Category A trees affected	Category B trees affected	Category C trees affected
Trees to be removed to facilitate development	3, 32	1, 9, 13, 19, 21, 50, 51, 52, 73, 78, 79, 80, 81, 85, 86, 93, 94, 95, 96, 97	2, 10, 14, 15, 17, 18, 20, 33, 56, 57, 58, 59, 60, 61, 75
Foundations within RPA of retained trees			9
Soil compaction around retained trees	All	All	All
Demolition of existing structures	34, 43	65, 69, 70	62, 71
Potential conflict with low branches	34, 84	65, 69, 70	
New surfaces to be laid within RPA of retained trees	34, 43, 84	6, 65, 69, 70, 72	26, 62, 63, 64, 71
Underground services	34, 84	65, 69, 70	

© Trevor Heaps Arboricultural Consultancy Ltd.

9.2 Trees to be removed to facilitate development

9.2.1 Two category A trees, twenty category B trees and 15 category C trees (thirty seven trees in total) will need to be removed to facilitate development.

9.2.2 In order to mitigate the loss of these trees, at least 30 new high quality trees will be planted throughout the site.

9.2.3 The location and species of tree will be carefully selected to ensure that each can grow into maturity and improve and enhance the amenity and arboreal character of the local area (especially, in the north-eastern section of the car parking area; which is currently devoid of any significant trees).

9.2.4 It is normally appropriate to deal with re-planting matters by condition or by way of a landscape plan; however, several potential re-planting locations have been shown on the Tree Protection Plan (TPP); and the following details can be confirmed at this stage:

- The new trees will be a mix of standard and heavy standard size (about 2-3m high and 3-4m high respectively);
- The new trees will be planted in full accordance with current British Standards (BS 8545: From Nursery to Independence in the Landscape);
- Once planted, the trees will be regularly maintained (watered and weeded during the spring and summer months) for at least 5 years or until established.

9.3 Foundations within RPA of retained trees

9.3.1 The proposed sub-station will be constructed within the RPAs of T29 and T30.

9.3.2 These minor incursions (5% of T29 and 10% of T30) can be more than off-set within the surrounding soft areas contiguous with its RPA and therefore non-invasive foundations are not justified; however, methodology is provided in the appendices to minimise root disruption..

9.3.3 The proposed cycle store will be constructed within the RPAs of T75 & T76.

9.3.4 The areas affected (9% of T75 and 18% of T76) are moderate and so the store will sit on a floating concrete raft (i.e. no excavations required).

© Trevor Heaps Arboricultural Consultancy Ltd.

9.4 Soil compaction around retained trees

9.4.1 Soil compaction can be caused by various construction-related activities such as storage or materials and the use of heavy machinery (or even heavier than normal foot-fall during works). It is harmful to tree roots because it reduces gaseous exchange and the availability of water and nutrients.

9.4.2 To avoid soil compaction affecting the retained trees at this site, all vulnerable areas will be separated from the working area by protective fencing and ground protection.

9.4.3 Where possible, all existing hard surfaces (within the RPAs of retained trees) will also be left in situ during construction and only be removed (by hand / small machinery) at the landscaping stage.

9.5 Demolition of existing structures

9.5.1 To ensure that disruption is minimised to the roots and crowns of the nearby trees, the existing buildings will be demolished working away from the retained trees, using the 'top down, pull back' method and the base / foundations will be left in situ during construction to provide a working / storage area.

9.5.2 At the last possible stage, these bases will then be carefully removed working away from the retained trees.

9.6 Potential conflict with low branches of retained trees

9.6.1 The lower lateral branches on some of the retained trees are potentially vulnerable to damage during demolition and construction.

9.6.2 To remove the risk of accidental damage, the lateral branches on the vulnerable sides of their crowns will be tip-reduced and crown-lifted to provide adequate clearance.

9.6.3 Some works are suggested; however, the final, specific pruning specification will be agreed on during a pre-commencement meeting with the arboricultural consultant, tree officer and tree contractor.

© Trevor Heaps Arboricultural Consultancy Ltd.

9.7 New surfaces to be laid within RPA of retained trees

9.7.1 Several of the new hard surfaces (for paths and parking) conflict with the RPAs of retained trees.

9.7.2 To minimise root disruption, the new surfaces will be of a 'no-dig' design, and have permeable surfaces.

9.7.3 The new 'no-dig' surfaces will be laid before construction commences and so will act as ground protection for any roots beneath during construction.

9.8 Underground services

9.8.1 The proposals will be designed in such a way as to either connect directly to existing underground services (with no further excavations) or be connected to existing services using a route outside the RPAs of trees shown retained.

9.8.2 If existing services within RPAs require upgrading, care shall be taken to minimise disturbance and where practicable, trenchless techniques employed; only as a last resort should open excavations be considered. Where existing services within RPAs are deemed not satisfactory for any further use, they should be left in situ rather than being excavated or removed.

9.8.3 If, for whatever reason, the proposed services need to be moved (and incursions into RPAs are unavoidable), then the installation works will be carried out under full arboricultural supervision and will, at the very least, comply with the methods and guidelines detailed in the National Joint Utilities Group publication NJUG 4, Guidelines for the Planning, Installation, and Maintenance of Utility Services in Proximity to Trees (November 2007).

9.8.4 If necessary, the locations of service routes will be approved by the arboricultural consultant and shown on a revised Tree Protection Plan.

© Trevor Heaps Arboricultural Consultancy Ltd.

10.0 Conclusions

10.1 Forty trees will need to be removed to facilitate construction.

10.2 There is scope for a well thought out landscaping plan to help enhance and complement the amenity and arboreal character of the local area. As part of this, at least thirty new replacement trees will be planted within the site (post-construction).

10.3 The retained trees will be protected using up-to-date methodology and guidance provided by the current British Standards (BS 58378:2012). To this end, a site-specific AMS and TPP have been provided. These are found in Section 11 and Appendix 9 respectively.

10.4 Provided the recommendations laid out in this report are followed, the proposals will not detrimentally affect the trees and, with the suggested tree re-planting, will improve and enhance the character and appearance of the local area.

10.5 The trees do not cause any significant conflicts in terms of construction activities, nor will any significant issues of post-development pressure be likely to emerge that could not be managed with routine, minor tree maintenance.

11.0 The Arboricultural Method Statement (AMS)

11.1 Effective tree protection relies on following a logical sequence of events and arboricultural supervision. This AMS lays down the methodology for all construction works that may influence significant trees and recommendations for arboricultural supervision are provided in Section 12.

11.2 It is essential that this AMS is observed and adhered to. Therefore, a copy of this AMS must be issued to the building contractor to be integrated into their work schedule and must also be permanently made available on-site for the duration of development.

11.3 This AMS should be read in conjunction with the supporting Tree Protection Plan (TPP), which is found in Appendix 9.

© Trevor Heaps Arboricultural Consultancy Ltd.

11.4 At this site, operations are to occur in the following sequence (refer to Appendix 4 for further details on underlined methodology; which are listed in alphabetical order):

1. Hold pre-commencement site meeting with project arboriculturist, building contractor, arboricultural officer and tree contractor (prior to the commencement of any development work commencing on site). The contractor will be required to read and sign the induction form (see Appendix 7).

2. Carry out tree work operations highlighted yellow in the tree data schedule (Appendix 2) and/or agreed at the pre-commencement site meeting. All tree works are to be carried out by a competent and experienced arborist to current British Standards (see Appendix 5.9 for assistance finding a suitable arborist).

3. Erect protective fencing along the position(s) shown by the dashed red line/s on the TPP.

4. Arboricultural Consultant to check Tree Protection at this stage.

5. Demolish existing buildings, leaving any suitable hard surfaces in situ (as ground protection).

6. Lay the 'no-dig' paths and parking areas, at the very least within the RPAs of the retained trees affected. This will act as ground protection during construction.

7. Arboricultural Consultant to check Tree Protection at this stage.

8. Commence construction

9. Working from on top of existing hard surfaces and/or suitable ground protection, construct the cycle store)

10. Working from on top of existing hard surfaces and/or suitable ground protection, excavate traditional strip foundation trenches for the sub-station.

11. Remove tree protection when all construction activity has ended.

12. Carry out tree planting and any other landscaping works.

© Trevor Heaps Arboricultural Consultancy Ltd.

12.0 Arboricultural supervision

12.1 A suitably-qualified arboriculturalist will provide on-going supervision during construction. The occasions when supervision is required are outlined in Table 2. If the LPA wish to see further supervision, this matter can be dealt with by amending the report and/or by condition.

Table 2: Indicative arboricultural supervision requirements

Supervision details	Required (Y / N)	When	Details	Nature	Sign off
Pre-commencement site meeting	Y	Prior to any site activity	To ensure contractors are briefed & understand the AMS & TPP. A site supervisor will be appointed to oversee tree protection & the reporting of any damage to trees or deviation from the AMS - to the project arboriculturist / LPA	Informal and open discussions. Induction form signed by attendees	Details of meeting to be sent to LPA within 5 days
Meeting with tree contractors	Y	Prior to protective measures being installed	To ensure tree work instructions are clear and understood.	Informal meeting	No follow up required
Protective measure(s) check	Y	Prior to any site activity	To ensure that protective measures are fit-for-purposed and correctly positioned.	Site meeting with a site monitoring report to be prepared	Details of to be sent to LPA within 5 days
On-going supervision	Y	Every 2 weeks during construction	To ensure that the protective measures have not been moved and continue to be fit-for-purpose.	Site meeting with a site monitoring report to be prepared	Details of to be sent to LPA within 5 days
Supervision of excavation works near trees	Y	During construction	To supervise key stages of works near trees (laying no-dig surfaces near T34 & T84)	Site meeting with a site monitoring report to be prepared	Details of to be sent to LPA within 5 days
~~Meeting with landscape contractors~~	~~N~~	~~After construction~~	~~To provide advice on tree / shrub selection (if not conditioned)~~	~~Informal meeting~~	~~No follow up required~~

12.2 A site inspection record (see Appendix 8) will be prepared after each visit and will state the condition of tree protection measures and outline any required remedial action (and timescales).

12.3 To demonstrate compliance, and to help the LPA discharge relevant planning conditions, all site monitoring reports will be forwarded to the LPAs arboricultural officer within 5 working days of the visit.

12.3 NOTE: It is the applicant's responsibility to arrange meeting dates with the arboriculturist.

© Trevor Heaps Arboricultural Consultancy Ltd.

13.0 Signature

This report represents a true and factual account of the potential arboricultural impacts, and makes recommendations for appropriate protective measures, at the subject property.

Signed

.....

Trevor Heaps

Chartered Arboriculturist

BSc (Hons), MArborA, MICFor.

Dated

25th September 2019

© Trevor Heaps Arboricultural Consultancy Ltd.

Appendix 1 - Professional résumé

I am Trevor Heaps, director of Trevor Heaps Arboricultural Consultancy Ltd. I am a Chartered Arboriculturist, a Professional Member of the Arboricultural Association (AA) and hold a First-Class Honours Degree in Arboriculture.

Professional training

- Arboriculture and Bats: Scoping Surveys for Arborists (BCT & AA) – October 2017
- Tree Science (AA) – June 2016
- OPM (Oak Processionary Moth) Training (FC) – May 2016
- Visual Tree Assessment (Arboricultural Association) - October 2015
- Trees and the Law (Dr Charles Mynors) - June 2015
- Mortgage (Home Buyers) Report Writing (LANTRA / CAS) - February 2015
- Tree Preservation Orders - effective application (LANTRA / CAS) - November 2014
- Professional Tree Inspection 3-day course (LANTRA / AA) - July 2014
- Arboricultural Consultancy Course (AA) - May 2014
- Further down the subsidence trail 1-day course (AA) - April 2013
- Getting to grips with subsidence 1-day course (AA) - November 2012

AA – Arboricultural Asscociation

BCT – Bat Conservation Trust

CAS – Consulting Arborist Society

FC – Forestry Commission

© Trevor Heaps Arboricultural Consultancy Ltd.

Appendix 2 - Tree data schedule

Ref	Name	Age	DBH (mm)	Hgt. (m)	Can. hgt. (m)	Can N (m)	Can E (m)	Can S (m)	Can W (m)	Physio cond.	Struct cond.	Life Exp.	Ret. Cat.	Comments	Rec's (proposed works are highlighted)
T1	Acer pseudoplatanus (Sycamore)	EM	200	5	2.5	2	2	2	2	Normal	Fair	40+	B2	Pruned (badly) in past.	Remove to facilitate development
G2	Rhus typhina (Stags Horn Sumach)	EM	50	3	1.5	1.5	1.5	1.5	1.5	Normal	Normal	40+	C2	Small group of shrubs	No works required at present.
T3	Prunus avium (Wild Cherry)	EM	260	8	3	4.5	4.5	4.5	4.5	Normal	Normal	40+	A2		Remove to facilitate development
T4	Acer pseudoplatanus (Sycamore)	EM	200	10	4	3	3	3	3	Normal	Normal	40+	B2		No works required at present.
T5	Betula pendula (Silver Birch)	M	300	16	2.5	3	3	3	3	Normal	Normal	40+	A2	Growing on third-party land (dbh estimated).	N/A - Third party tree.
T6	Acer pseudoplatanus (Sycamore)	EM	250	15	3	3.5	3.5	3.5	3.5	Normal	Fair	40+	B2	Growing on third-party land (dbh estimated). Ivy (light covering). Triple-stemmed at base.	N/A - Third party tree.
T7	Betula pendula (Silver Birch)	D	125	8	4	3	3	3	3	Dead	Dead	<10	U		Remove (due to poor condition).
T8	Betula pendula (Silver Birch)	D	125	8	4	3	3	3	3	Dead	Dead	<10	U		Remove (due to poor condition).
T9	Betula pendula (Silver Birch)	M	175	12	4	3	3	3	3	Normal	Normal	20+	B2		Remove to facilitate development
T10	Betula pendula (Silver Birch)	M	210	15	4	3	3	3	3	Normal	Fair	20+	C2	Decay at base due to historic removal of old stem	Remove to facilitate development
T11	Fraxinus excelsior (Ash)	EM	200	14	4	3	3	3	3	Normal	Normal	40+	B2	Growing on third-party land (dbh estimated).	N/A - Third party tree.
S12	Rhus typhina (Stags Horn Sumach)	EM	100	3	1.5	1.5	1.5	1.5	1.5	Normal	Normal	40+	C2		No works required at present.
T13	Crataegus monogyna (Hawthorn)	EM	200	5	2	2.5	2.5	2.5	2.5	Normal	Normal	40+	B2		Remove to facilitate development
S14	Rhus typhina (Stags Horn Sumach)	EM	100	3	1.5	1.5	1.5	1.5	1.5	Normal	Normal	40+	C2		Remove to facilitate development

© Trevor Heaps Arboricultural Consultancy Ltd.

Ref	Name	Age	DBH (mm)	Hgt. (m)	Can. hgt. (m)	Can N (m)	Can E (m)	Can S (m)	Can W (m)	Physio cond.	Struct cond.	Life Exp.	Ret. Cat.	Comments	Rec's (proposed works are highlighted)
S15	Rhus typhina (Stags Horn Sumach)	EM	75	3	1.5	2.5	2.5	2.5	2.5	Normal	Normal	40+	C2	Multi-stemmed at base.	Remove to facilitate development
T16	Fraxinus excelsior (Ash)	EM	250,200	7	2.5	3	3	3	3	Normal	Normal	40+	B2	Twin-stemmed.	No works required at present.
T17	Fraxinus excelsior (Ash)	EM	150	5	2.5	2	2	2	2	Normal	Normal	40+	C2		Remove to facilitate development
T18	Fraxinus excelsior (Ash)	EM	100	5	2.5	1.5	1.5	1.5	1.5	Normal	Normal	40+	C2		Remove to facilitate development
T19	Fraxinus excelsior (Ash)	EM	200	6.5	2.5	2	2	2	2	Normal	Normal	40+	B2		Remove to facilitate development
T20	Fraxinus excelsior (Ash)	EM	150	5	2.5	2	2	2	2	Normal	Normal	40+	C2		Remove to facilitate development
T21	Prunus serrulata 'Kanzan' (Kanzan Cherry)	EM	250	4	2	3	3	3	3	Fair	Normal	20+	B2	Sparse.	Remove to facilitate development
T22	Alnus glutinosa (Common Alder)	EM	275	15	3	2.5	2.5	2.5	2.5	Normal	Normal	40+	B2		No works required at present.
T23	Ailanthus altissima (Tree of Heaven)	EM	200	4.5	2	2.5	2.5	2.5	2.5	Normal	Normal	40+	B2		No works required at present.
T24	Acer pseudoplatanus (Sycamore)	M	350,250	18	3	5	5	5	5	Normal	Normal	40+	B2	Ivy (light covering). Twin-stemmed at base. Epicormics.	No works required at present.
G25	Ulmus procera (English Elm),Sambucus nigra (Elder),Acer pseudoplatanus (Sycamore)	EM	100	5	0.5	2.5	2.5	2.5	2.5	Fair	Fair	40+	C2	Ivy (heavy covering).Linear group of ivy smothered Elm, Elder and Sycamore. Growing 2-3 m above level of playground to the west	No works required at present.
S26	Sambucus nigra (Elder)	M	300	5	2	2.5	2.5	2.5	2.5	Fair	Fair	20+	C2	Multi-stemmed at base.	No works required at present.
S27	Sambucus nigra (Elder)	M	450	7	2	2.5	2.5	2.5	2.5	Fair	Fair	20+	C2	Ivy (heavy covering). Multi-stemmed at base. Growing 2m higher than ground level of playground	No works required at present.

© Trevor Heaps Arboricultural Consultancy Ltd.

Ref	Name	Age	DBH (mm)	Hgt. (m)	Can. hgt. (m)	Can N (m)	Can E (m)	Can S (m)	Can W (m)	Physio cond.	Struct cond.	Life Exp.	Ret. Cat.	Comments	Rec's (proposed works are highlighted)
T28	Acer pseudoplatanus (Sycamore)	M	300	16	3	5	5	5	5	Normal	Fair	40+	C2	Ivy (heavy covering). Twin-stemmed at base. Tight forks noted.	Remove ivy from base of tree (from ground level to crown break) and re-inspect for defects.
T29	Acer pseudoplatanus (Sycamore)	M	350	16	3	5	5	5	5	Normal	Fair	40+	C2	Ivy (heavy covering). Multi-stemmed at base. Tight forks noted.	Remove ivy from base of tree (from ground level to crown break) and re-inspect for defects.
T30	Liquidambar styraciflua (Sweet Gum)	SM	190	6	2	2.5	2.5	2.5	2.5	Normal	Normal	40+	B2		No works required at present.
T31	Liquidambar styraciflua (Sweet Gum)	SM	140	5	2	2.5	2.5	2.5	2.5	Normal	Normal	40+	C2		No works required at present.
T32	Fraxinus excelsior (Ash)	M	570	20	5.5	6	6	6	6	Normal	Normal	40+	A1		Remove to facilitate development
T33	Malus (Apple)	EM	100	6	2.5	2.5	2.5	2.5	2.5	Fair	Fair	20+	C2	Multi-stemmed at base. Tight forks noted. Leaning on lamp column	Remove to facilitate development
T34	Fraxinus excelsior (Ash)	M	665	20	5.5	8	8	8	8	Normal	Normal	40+	A1	Large limb growing towards access road. May need pruning if site developed.	Crown lift to 5.2m and cut back to provide access for vehicles and construction
T35	Acer pseudoplatanus (Sycamore)	M	490	18	5	4	4	4	4	Normal	Normal	40+	B2	Ivy (heavy covering).Part of a linear group of self-seeded boundary trees located either side of fence.	Sever ivy at base.
T36	Acer pseudoplatanus (Sycamore)	M	450	18	5	4	4	4	4	Normal	Normal	40+	C2	Ivy (heavy covering).Part of a linear group of self-seeded boundary trees located either side of fence.	Sever ivy at base.
T37	Acer pseudoplatanus (Sycamore)	M	250	15	5	3.5	3.5	3.5	3.5	Normal	Normal	40+	C2	Ivy (heavy covering).Part of a linear group of self-seeded boundary trees located either side of fence.	Sever ivy at base.

© Trevor Heaps Arboricultural Consultancy Ltd.

Ref	Name	Age	DBH (mm)	Hgt. (m)	Can. hgt. (m)	Can N (m)	Can E (m)	Can S (m)	Can W (m)	Physio cond.	Struct cond.	Life Exp.	Ret. Cat.	Comments	Rec's (proposed works are highlighted)
T38	Acer pseudoplatanus (Sycamore)	M	500	18	5	4	4	4	4	Normal	Normal	40+	C2	Ivy (heavy covering).Part of a linear group of self-seeded boundary trees located either side of fence.	Sever ivy at base.
T39	Acer pseudoplatanus (Sycamore)	M	250	15	5	3.5	3.5	3.5	3.5	Normal	Normal	40+	C2	Ivy (heavy covering).Part of a linear group of self-seeded boundary trees located either side of fence.	Sever ivy at base.
T40	Acer pseudoplatanus (Sycamore)	M	450	18	5	4	4	4	4	Normal	Normal	40+	C2	Ivy (heavy covering). Twin-stemmed at base. Part of a linear group of self-seeded boundary trees located either side of fence.	Sever ivy at base.
T41	Fraxinus excelsior (Ash)	M	510	18	4	4.5	4.5	4.5	4.5	Normal	Normal	40+	A2	Ivy (heavy covering).	Sever ivy at base.
G42	Ulmus procera (English Elm)	SM	100	8	2	2.5	2.5	2.5	2.5	Fair	Normal	<10	C2	Group of young Elms.	Remove the single dead Elm nearest road.
T43	Quercus robur (Common Oak)	M	1130	25	4	10.5	10.5	10.5	10.5	Normal	Normal	40+	A1	Ivy (light covering). Twin-stemmed.	No works required at present.
T44	Quercus robur (Common Oak)	EM	490	25	4	5.5	5.5	5.5	5.5	Normal	Normal	40+	B1	Ivy (light covering). Suppressed. Asymmetrical crown.	No works required at present.
T45	Acer pseudoplatanus (Sycamore)	OM	600	18	4	5.5	5.5	5.5	5.5	Fair	Very poor	40+	U	Kretzschmaria deusta noted. Ivy (light covering). Suppressed. Asymmetrical crown.	Remove (due to poor condition).
T46	Acer pseudoplatanus (Sycamore)	EM	250	7	1.5	3	3	3	3	Normal	Normal	40+	B2	Ivy (light covering). Suppressed. Asymmetrical crown.	No works required at present.
T47	Crataegus monogyna (Hawthorn)	M	200	7	2	2.5	2.5	2.5	2.5	Fair	Fair	20+	C2	Ivy (heavy covering). Twin-stemmed at base. Suppressed. Asymmetrical crown. Sparse. Die-back in crown.	No works required at present.
T48	Crataegus monogyna (Hawthorn)	M	150	7	2	2.5	2.5	2.5	2.5	Fair	Fair	20+	C2	Ivy (heavy covering). Multi-stemmed at base. Suppressed. Asymmetrical crown. Sparse. Die-back in crown.	No works required at present.
T49	Crataegus monogyna (Hawthorn)	M	200	7	2	2.5	2.5	2.5	2.5	Fair	Fair	20+	C2	Ivy (heavy covering). Twin-stemmed at base. Suppressed. Asymmetrical crown. Sparse. Die-back in crown.	No works required at present.
T50	Fraxinus excelsior (Ash)	M	600,500,400	20	4	6.5	6.5	6.5	6.5	Normal	Normal	40+	B2	Ivy (heavy covering). Epicormics.	Remove to facilitate development

© Trevor Heaps Arboricultural Consultancy Ltd.

Ref	Name	Age	DBH (mm)	Hgt. (m)	Can. hgt. (m)	Can N (m)	Can E (m)	Can S (m)	Can W (m)	Physio cond.	Struct cond.	Life Exp.	Ret. Cat.	Comments	Rec's (proposed works are highlighted)
T51	Fraxinus excelsior (Ash)	M	640	20	4	6.5	3.5	6.5	6.5	Normal	Fair	40+	B2	Ivy (heavy covering). Suppressed. Asymmetrical crown.	Remove to facilitate development
T52	Acer pseudoplatanus (Sycamore)	M	450,450,450,300,400	20	4	6.5	6.5	6.5	6.5	Normal	Normal	40+	B2	Ivy (heavy covering). Multi-stemmed at base. Single, ivy-covered stem on north-western side of tree has decay at base. Sealing, but leaning out towards road and building. Its removal will not affect remainder of tree.	Remove to facilitate development
T53	Acer pseudoplatanus (Sycamore)	OM	500	25	5	2.5	2.5	7	7	Normal	Fair	20+	U	Decay noted at base. Unable to inspect stem due to Ivy. Tight forks noted. Cavities noted. Suppressed. Asymmetrical crown.	Remove (due to poor condition).
T54	Acer pseudoplatanus (Sycamore)	OM	650	25	5	7	7	2	2	Normal	Fair	40+	U	Kretzschmaria deusta noted. Unable to inspect stem due to Ivy. Tight forks noted. Suppressed. Asymmetrical crown. Die-back in crown.	Remove (due to poor condition).
T55	Acer pseudoplatanus (Sycamore)	M	300	20	5	7	2.5	2.5	7	Normal	Fair	40+	U	Unable to inspect stem due to Ivy. Tight forks noted. Suppressed. Asymmetrical crown.	Remove, due to loss of shelter from removing neighbouring trees
T56	Acer pseudoplatanus (Sycamore)	EM	350	16	4	3.5	3.5	3.5	3.5	Normal	Normal	40+	C2	Part of a line of self-seeded boundary trees	Remove to facilitate development
T57	Acer pseudoplatanus (Sycamore)	EM	200	16	4	3.5	3.5	3.5	3.5	Normal	Normal	40+	C2	Part of a line of self-seeded boundary trees	Remove to facilitate development
T58	Acer pseudoplatanus (Sycamore)	EM	350	16	4	3.5	3.5	3.5	3.5	Normal	Normal	40+	C2	Part of a line of self-seeded boundary trees	Remove to facilitate development
T59	Acer pseudoplatanus (Sycamore)	EM	250	16	4	3.5	3.5	3.5	3.5	Normal	Normal	40+	C2	Part of a line of self-seeded boundary trees	Remove to facilitate development
T60	Acer pseudoplatanus (Sycamore)	EM	300	16	4	3.5	3.5	3.5	3.5	Normal	Fair	40+	C2	Tight forks noted. Part of a line of self-seeded boundary trees	Remove to facilitate development
T61	Acer pseudoplatanus (Sycamore)	EM	250	16	4	3.5	3.5	3.5	3.5	Normal	Fair	40+	C2	Twin-stemmed at base. Part of a line of self-seeded boundary trees	Remove to facilitate development
T62	Acer pseudoplatanus (Sycamore)	EM	300	16	4	3.5	3.5	3.5	3.5	Normal	Fair	40+	C2	Ivy (heavy covering). Triple-stemmed at base. Part of a line of self-seeded boundary trees	No works required at present.

© Trevor Heaps Arboricultural Consultancy Ltd.

Ref	Name	Age	DBH (mm)	Hgt. (m)	Can. hgt. (m)	Can N (m)	Can E (m)	Can S (m)	Can W (m)	Physio cond.	Struct cond.	Life Exp.	Ret. Cat.	Comments	Rec's (proposed works are highlighted)
S63	Corylus avellana (Hazel)	M	450	8	2	3.5	3.5	3.5	3.5	Fair	Fair	40+	C2	Ivy (heavy covering). Multi-stemmed at base.	No works required at present.
T64	Acer pseudoplatanus (Sycamore)	EM	200	8	2	2.5	2.5	2.5	2.5	Fair	Fair	40+	C2	Ivy (heavy covering). Multi-stemmed at base. Unable to inspect stem due to Ivy. Pruned (badly) in past.	No works required at present.
T65	Fraxinus excelsior (Ash)	M	400,650	25	8	8	8	8	8	Normal	Normal	40+	B2	Ivy (heavy covering). Twin-stemmed at base. Unable to inspect stem due to Ivy.	Remove ivy. Crown lift to 5.2m and cut back to provide access for vehicles and construction
T66	Acer pseudoplatanus (Sycamore)	D	450	16	5	5	5	5	5	Dead	Dead	<10	U	Sooty bark disease	Remove (due to poor condition).
T67	Acer pseudoplatanus (Sycamore)	D	650	25	5	5	5	5	5	Dead	Dead	<10	U	Multi-stemmed at base. Sooty bark disease	Remove (due to poor condition).
T68	Acer pseudoplatanus (Sycamore)	D	650	25	5	5	5	5	5	Dead	Dead	<10	U	Multi-stemmed at base. Cavities noted. Sooty bark disease	Remove (due to poor condition).
T69	Acer pseudoplatanus (Sycamore)	M	500,150	20	8	7	7	7	2	Normal	Normal	40+	B2	Ivy (light covering). Twin-stemmed at base. Suppressed. Asymmetrical crown. Potentially infected by sooty bark disease. Re-assess at start of May 2019	Remove ivy. Crown lift to 5.2m and cut back to provide access for vehicles and construction
T70	Acer pseudoplatanus (Sycamore)	M	650	25	8	7	7	7	7	Normal	Normal	40+	B2	Ivy (heavy covering). Unable to inspect stem due to Ivy. Potentially infected by sooty bark disease. Re-assess at start of May 2019	Remove ivy. Crown lift to 5.2m and cut back to provide access for vehicles and construction
T71	Prunus avium (Wild Cherry)	EM	150	16	5	3	3	3	3	Normal	Fair	40+	C2	Ivy (heavy covering). Triple-stemmed at base. Tight forks noted.	No works required at present.
T72	Fraxinus excelsior (Ash)	M	360	22	5	5.5	3.5	5.5	6.5	Normal	Normal	40+	B2	Suppressed. Asymmetrical crown.	No works required at present.

© Trevor Heaps Arboricultural Consultancy Ltd.

Ref	Name	Age	DBH (mm)	Hgt. (m)	Can. hgt. (m)	Can N (m)	Can E (m)	Can S (m)	Can W (m)	Physio cond.	Struct cond.	Life Exp.	Ret. Cat.	Comments	Rec's (proposed works are highlighted)
T73	Fraxinus excelsior (Ash)	M	360	25	5	5.5	5.5	5.5	5.5	Normal	Normal	40+	B2	Ivy (heavy covering).	Remove to facilitate development
T74	Fraxinus excelsior (Ash)	EM	300	18	3	4.5	4.5	3	4.5	Normal	Normal	40+	B2	Suppressed. Asymmetrical crown.	Remove to facilitate development
T75	Acer pseudoplatanus (Sycamore)	EM	250	16	5	4	4	4	4	Normal	Fair	40+	C2	Ivy (heavy covering). Twin-stemmed. Suppressed. Asymmetrical crown.	Remove to facilitate development
T75	Acer pseudoplatanus (Sycamore)	M	400	20	5	4	4	4	4	Normal	Normal	40+	B2	Ivy (light covering).	Remove to facilitate development
T76	Acer pseudoplatanus (Sycamore)	M	350	20	5	4	4	4	4	Normal	Fair	40+	C2	Ivy (light covering). Twin-stemmed.	No works required at present.
T77	Acer pseudoplatanus (Sycamore)	M	300	16	5	3	3	3	3	Normal	Fair	40+	C2	Ivy (light covering). Triple-stemmed at base.	No works required at present.
T78	Acer pseudoplatanus (Sycamore)	EM	300	17.5	8	3.5	3.5	3.5	3.5	Normal	Normal	40+	B2	Epicormics.	Remove to facilitate development
T79	Acer pseudoplatanus (Sycamore)	EM	350	16	8	3.5	3.5	3.5	3.5	Normal	Normal	40+	B2	Elm growing from base	Remove to facilitate development
T80	Acer pseudoplatanus (Sycamore)	EM	300	18	8	3	3	3	3	Normal	Normal	40+	B2	Ivy (heavy covering).	Remove to facilitate development
T81	Acer pseudoplatanus (Sycamore)	M	350	17	4	4	4	4	4	Normal	Normal	40+	B2	Ivy (heavy covering).	Remove to facilitate development
T82	Acer pseudoplatanus (Sycamore)	M	300	17	4	4	4	4	4	Normal	Normal	40+	B2	Ivy (light covering).	No works required at present.
T83	Acer pseudoplatanus (Sycamore)	M	350	17	4	4	4	4	4	Normal	Normal	40+	B2	Ivy (light covering).	No works required at present.
T84	Acer pseudoplatanus (Sycamore)	M	550	25	6	5	5	5	5	Normal	Normal	40+	A1	Twin-stemmed at base. Epicormics.	Crown lift to 5.2m and cut back to provide access for vehicles and construction

© Trevor Heaps Arboricultural Consultancy Ltd.

Ref	Name	Age	DBH (mm)	Hgt. (m)	Can. hgt. (m)	Can N (m)	Can E (m)	Can S (m)	Can W (m)	Physio cond.	Struct cond.	Life Exp.	Ret. Cat.	Comments	Rec's (proposed works are highlighted)
T85	Acer pseudoplatanus (Sycamore)	M	300	17	4	4	4	4	4	Normal	Normal	40+	B2	Ivy (light covering).	Remove to facilitate development
T86	Quercus robur (Common Oak)	M	300	15	4	4	4	4	4	Normal	Normal	40+	B2	Ivy (light covering).	Remove to facilitate development
G87	Ulmus procera (English Elm),Acer pseudoplatanus (Sycamore),Fraxinus excelsior (Ash)	EM	100	5	0.5	2.5	2.5	2.5	2.5	Fair	Fair	40+	C2	Ivy (heavy covering).Triangular group of ivy covered Elm, Sycamore and Ash.	No works required at present.
T88	Fraxinus excelsior (Ash)	M	650	20	6	5	5	5	5	Normal	Normal	40+	A2	Ivy (heavy covering).	Sever ivy at base.
G89	Acer pseudoplatanus (Sycamore)	M	500	20	5	5	5	5	5	Fair	Fair	40+	B3	Large group of ivy-clad trees, mainly growing along or near to boundary	Sever ivy at base.
G90	Acer pseudoplatanus (Sycamore)	M	400	20	5	5	5	5	5	Fair	Fair	40+	B3	Large group of ivy-clad trees, mainly growing along or near to boundary	Sever ivy at base.
G91	Acer pseudoplatanus (Sycamore)	M	500	20	5	5	5	5	5	Fair	Fair	40+	B3	Large group of ivy-clad trees, mainly growing along or near to boundary	Sever ivy at base.
G92	Fraxinus excelsior (Ash)	Y	100	8	2	2.5	2.5	2.5	2.5	Normal	Fair	40+	C3	Large group of self-seeded Ash saplings growing between playing courts and the belt of mature Sycamores on boundary	No works required at present.
T93	Salix caprea (Goat Willow)	EM	300	15	8	3	3	3	3	Normal	Normal	40+	B2		Remove to facilitate development
T94	Salix caprea (Goat Willow)	EM	400	15	8	3	3	3	3	Normal	Normal	40+	B2		Remove to facilitate development
G95	Acer campestre (Field Maple)	EM	300	8	3	3	3	3	3	Normal	Normal	40+	B3	Ivy (heavy covering).Pair of maturing, ivy-clad trees overhanging playing courts.	Remove to facilitate development
T96	Fraxinus excelsior (Ash)	EM	500	18	8	3	3	3	3	Normal	Normal	40+	B2		Remove to facilitate development
T97	Fraxinus excelsior (Ash)	EM	400	15	8	3	3	3	3	Normal	Normal	40+	B2		Remove to facilitate development

© Trevor Heaps Arboricultural Consultancy Ltd.

Appendix 3 - Tree data schedule explanatory notes

This section explains the terms used in the **Tree data schedule** (Appendix 2).

Ref: Each item of vegetation has its own unique number, prefixed by a letter such that:

T1=Tree **S2**=Shrub or stump **G3**=Group **H4**=Hedge **W5**=Woodland

Species: Latin (and common names in brackets) are given.

Age:

- **Y - Young -** Usually less than 10 years' old
- **SM - Semi-mature -** Significant future growth to be expected, both in height and crown spread (typically below 30% of life expectancy)
- **EM - Early-mature -** Full height almost attained. Significant growth may be expected in terms of crown spread (typically 30-60% of life expectancy)
- **M - Mature -** Full height attained. Crown spread will increase but growth increments will be slight (typically 60% or more of life expectancy)
- **V - Veteran -** A level of maturity whereby significant management may be required to keep the tree in a safe condition
- **OM – Over-mature -** As for veteran except management is not considered worthwhile

DBH (mm): Stem diameter, measured in mm, taken at 1.5m above ground level where possible.

Hgt. (m): Height: Measured from ground level to the top of the crown in metres.

Can Hgt. (m): Crown height: Measured from ground level to the lowest tips of the main crown begins in metres. Where the crown is unbalanced it is measured on the side deemed to be most relevant. This is usually the side facing the area of anticipated development.

Can N, S, E, W: - Canopy extents
Approximate radial crown spread measured to the four cardinal points (for individual trees only)

Physio cond.: Indicates the physiological condition of the tree as one of the following categories:

- **Normal -** Healthy tree with no symptoms of significant disease
- **Fair -** Tree with early signs of disease, small defects, decreased life expectancy, or evidence of less-than-average vigour for the species
- **Poor -** Significant disease present, limited life expectancy, or with very low vigour for the species and evidence of physiological stress
- **Very poor -** Tree is in advanced stages of physiological failure and is dying
- **Dead -** No leaves or signs of life

© Trevor Heaps Arboricultural Consultancy Ltd.

Struct cond.: Indicates the structural condition of the tree as one of the following categories:

- **Normal** - No significant structural defects noted
- **Fair** - Some structural defects noted but remedial action not required at present
- **Poor** - Significant defects noted resulting in a tree that requires regular monitoring or remedial action
- **Very poor** - Major defects noted that compromise the safety of the tree. Remedial works or tree removal is likely to be required.
- **Dead** - No leaves or signs of life

Life Exp.: The estimated number of years before the tree may require removal (<10), (10 – 20), (20 – 40), or (40+).

Ret. Cat.: - Retention category: BS5837:2012 Category where:

- **U = Trees unsuitable for retention**. Trees in such a condition that cannot realistically be retained as living trees in the context of the current land use for longer than 10 years. These trees are shown on the tree plans with red centres.

- **A = Trees of high quality**. Trees of high quality with an estimated remaining life expectancy of at least 40 years. These trees are shown on the tree plans with green centres.

- **B = Trees of moderate quality**. Trees of moderate quality with an estimated remaining life expectancy of at least 20 years. These trees are shown on the tree plans with blue centres.

- **C = Trees of low quality.** Trees of low quality with an estimated remaining life expectancy of at least 10 years, or young trees with a stem diameter below 150mm. These trees are shown on the tree plans with grey centres.

Trees of notable quality are graded as Category A or Category B. These trees are sometimes divided further into sub-categories:

- Sub-category 1 is allocated where it has been assessed that the tree has mainly arboricultural qualities.
- Sub-category 2 is allocated where it is assessed that the tree has mainly landscape qualities.
- Subcategory 3 is allocated where it is assessed that the tree has mainly cultural qualities, including conservation.

Trees may be allocated more than one sub-category. All sub-categories carry equal weight, with for example an A3 tree being of the same importance and priority as an A1 tree.

Comments: Tree form and pruning history are also recorded along with an account of any significant defects.

Rec's - Recommendations: Usually based on any defects observed and intended to ensure that the tree is in an acceptable condition.

© Trevor Heaps Arboricultural Consultancy Ltd.

Appendix 4 – Specifications for tree protective measures

Demolition of existing buildings

Any existing structures to be removed, that are within or close to the RPAs of retained trees, shall be demolished using the 'top down, pull back' method. This shall proceed in a manner pulling the structure back into itself, working away from the trees.

Any machinery used during the demolition and clearance of existing buildings must work from a position outside of the RPAs of retained trees and/or be positioned on suitable ground protection.

To avoid unnecessary root disruption, the foundations of demolished buildings within in the RPAs of retained trees shall either be left in situ or broken up by hand (using a pneumatic drill) under arboricultural supervision (if specified).

Excavation of traditional strip foundation trenches

To minimise root disruption during excavation works, the following guidance shall be followed:

The RPA of the subject tree shall be clearly marked on the ground with fluorescent marker paint - by tying the spray can to a tree's stem using a pre-determined length of string to represent the tree's root protection radius (RPR) and keeping the string taught when spraying the ground. Cross reference the fourth column of the table in Appendix 2 (DBH mm) with the 2nd column in table 1 below to determine the length of string required.

Table 1. The RPRs given below are for single-stemmed trees.
Please contact the project arboriculturist if the subject tree is multi-stemmed.

Single stem diameter (mm)	Radius of nominal circle (m) / RPR	RPA (m^2)	Single stem diameter (mm)	Radius of nominal circle (m) / RPR	RPA (m^2)	Single stem diameter (mm)	Radius of nominal circle (m) / RPR	RPA (m^2)
75	0.9	3	475	5.7	102	875	10.5	346
100	1.2	5	500	6	113	900	10.8	366
125	1.5	7	525	6.3	125	925	11.1	387
150	1.8	10	550	6.6	137	950	11.4	408
175	2.1	14	575	6.9	149	975	11.7	430
200	2.4	18	600	7.2	163	1000	12	452
225	2.7	23	625	7.5	177	1025	12.3	475
250	3	28	650	7.8	191	1050	12.6	499
275	3.3	34	675	8.1	206	1075	12.9	523
300	3.6	41	700	8.4	222	1100	13.2	547
325	3.9	48	725	8.7	238	1125	13.5	572
350	4.2	55	750	9	254	1150	13.8	598
375	4.5	64	775	9.3	272	1175	14.1	624
400	4.8	72	800	9.6	289	1200	14.4	651
425	5.1	82	825	9.9	308	1225	14.7	679
450	5.4	92	850	10.2	327	1250	15	707

© Trevor Heaps Arboricultural Consultancy Ltd.

To ensure the roots are cut as cleanly as possible, a hand-spade will first be used to cut along the edge of the excavation - to a depth of at least 300mm (spade depth).

Having cleanly severed any roots growing within the upper soil horizons, a mini-digger can then be used to complete the excavation.

Once complete, all severed roots shall be cut cleanly back to a suitable growth point using sharp secateurs or a sharp pull saw.

The foundation trenches shall then be lined with plastic sheeting (to avoid concrete residues leaching into rooting area/s of the retained trees) and back-filled with concrete.

Floating raft foundation for light structures (sheds, car ports, cycle / bin stores etc)

Light structures do not normally require substantial foundations and, where required, can be designed to have permeable bases; which should be of a no-dig, load-spreading construction set directly on to the existing soil surface (or fixed directly onto an existing hard surface).

A flat base will be required and so if the existing soil surface is uneven or sloping, it shall be levelled by removing no more than 50mm height of soil from the elevated areas or raising sunken areas with no more than 50mm of soil.

When levelling raised areas, it will normally be acceptable to sever roots less than 25 mm in diameter. If larger roots are found, the preferred course of action would be to raise the base level of the structure by filling rather than by cutting roots. However, if this is not practical and large roots have to be cut, the situation shall be discussed with a suitably qualified arboriculturist before a final decision is made.

Light covering structures can also be fixed onto a frame that can rise directly from the base or be fixed to supports either banged into the ground or set in carefully in hand-dug holes. Provided the supports are well spaced, i.e. greater than 1.5m apart, and of a relatively narrow diameter, i.e. not more than 15cm, it is unlikely they will cause any significant disturbance to RPAs.

Impermeable liners will be laid between the ground and the pouring of the concrete to prevent soil contamination.

© Trevor Heaps Arboricultural Consultancy Ltd.

Ground Protection

The following is based on an extract from British Standard 5837:2012 - Trees in relation to design, demolition and construction– Recommendations.

Temporary ground protection should be able to support any traffic entering or using the site without being distorted or causing compaction of underlying soil and might comprise one of the following:

a) for pedestrian-movements only, a single thickness of scaffold boards placed either on top of a driven scaffold frame, to form a suspended walkway, or on top of a compression-resistant layer (e.g. 100 mm depth of woodchip), laid onto a geotextile membrane;

b) for pedestrian-operated plant up to a gross weight of 2 t, proprietary, inter-linked ground protection boards placed on top of a compression-resistant layer (e.g. 150 mm depth of woodchip), laid onto a geotextile membrane;

c) for wheeled or tracked construction traffic exceeding 2 t gross weight, an alternative system (e.g. proprietary systems or pre-cast reinforced concrete slabs) to an engineering specification designed in conjunction with arboricultural advice, to accommodate the likely loading to which it will be subjected.

The location of the temporary ground protection is shown on the tree protection plan and detailed within the arboricultural method statement.

In all cases, the objective should be to avoid compaction of the soil, which can arise from the single passage of a heavy vehicle, especially in wet conditions, so that tree root functions remain unimpaired.

All ground protection is to be maintained in good order, so it is fit for purpose throughout development. The ground protection will not be altered in any way, or prematurely removed without prior consent of the project arboriculturist or the LPA arboricultural officer.

© Trevor Heaps Arboricultural Consultancy Ltd.

Figure 1: An example of ground protection on work areas within a RPA (BS 5837:2005).

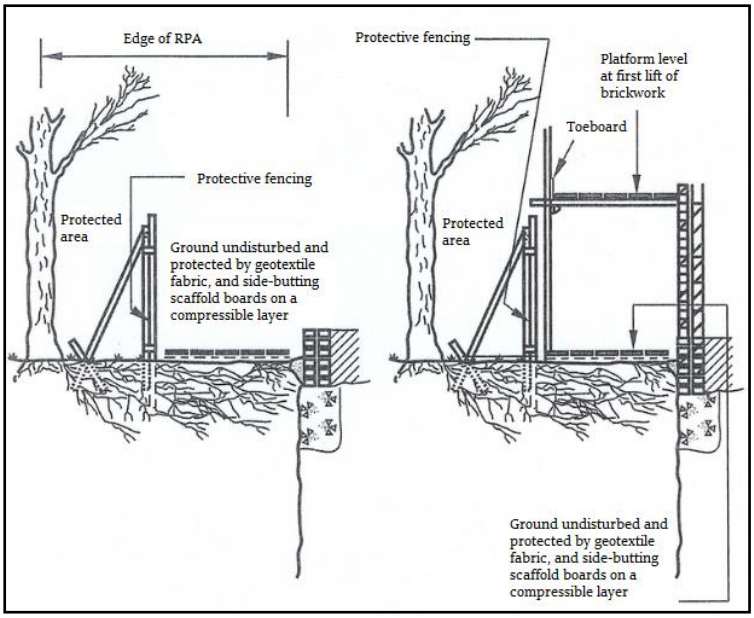

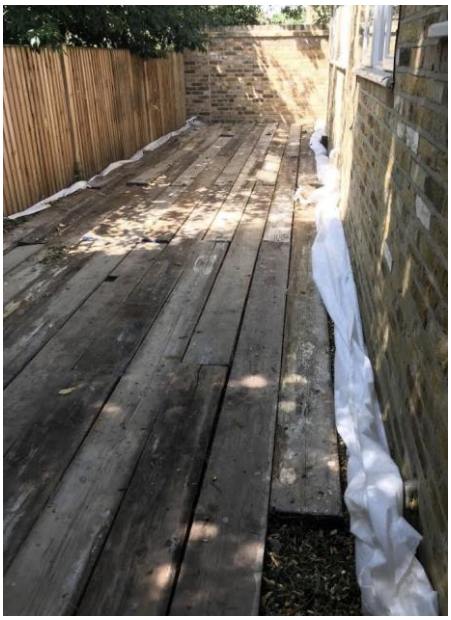

© Trevor Heaps Arboricultural Consultancy Ltd.

No-dig surface installations

The no-dig construction principles are outlined below and the areas to which they apply are shown on the TPP (shaded with orange honeycomb). A useful example diagram (by Protectoweb) is shown below (Figure 4).

Figure 4: A good example of the principles of a no-dig surface.

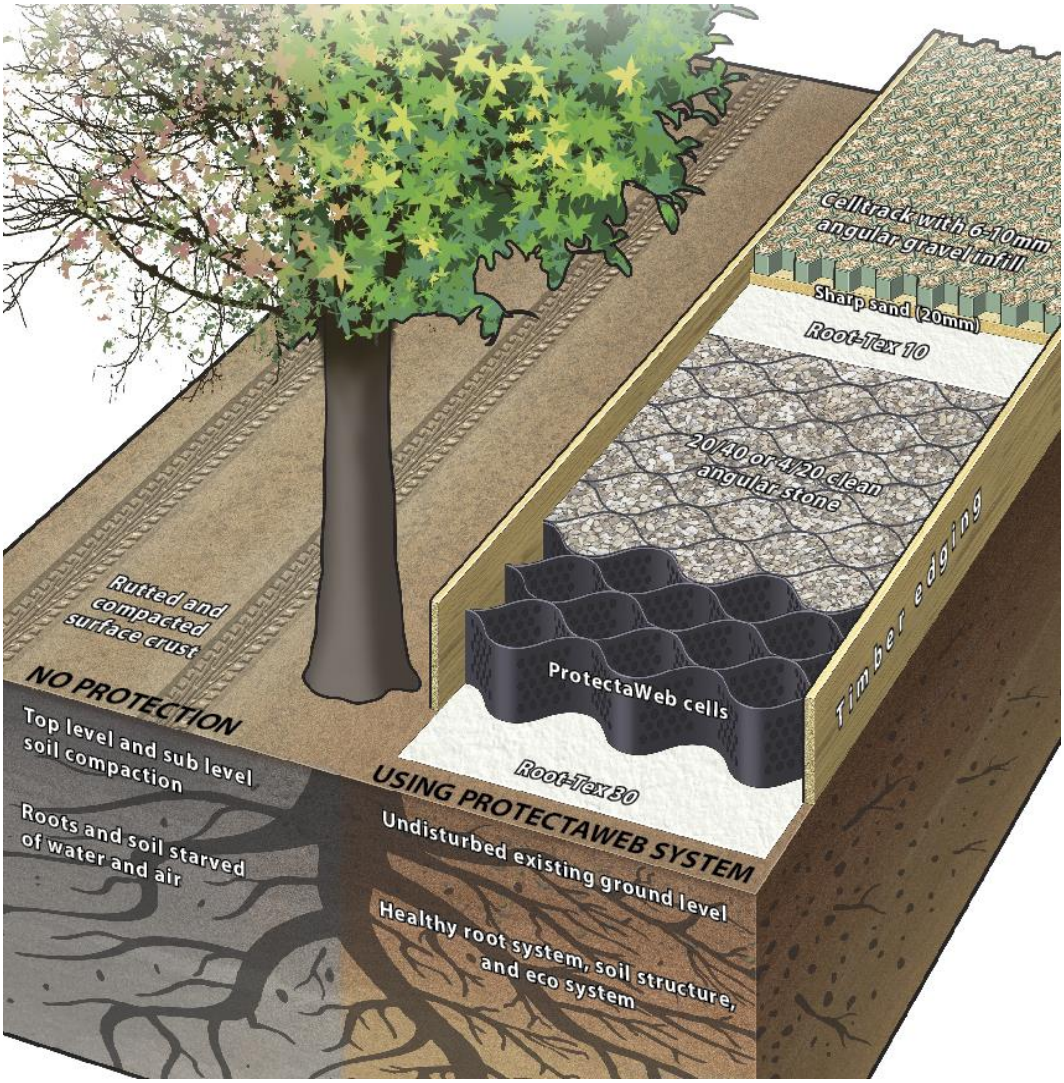

The surface vegetation will be treated with a suitable systemic herbicide and then removed by hand.

Any localised depressions will be filled in with sharp sand (not builders' sand, which has a high salt content) to create an even surface profile. The area will not be 'rolled' or consolidated in any way.

Timber edging boards (or similar) will be installed along the perimeter of the no-dig area. The fixing posts and pegs for the edging boards will be located carefully to avoid damaging to tree roots.

© Trevor Heaps Arboricultural Consultancy Ltd.

A layer of geotextile fabric will be laid across the 'no-dig' area, overlapping adjacent rolls by a minimum of 150mm (it may be necessary to lightly pin the geotextile in place until the overlying layers are installed).

The 3D Cellular Confinement System (3DCCS) will be opened, laid and pinned in place between the edging boards (it may be necessary to cut it to size using a sharp knife, or it can be left uncut and folded up against the edgings if preferred).

The system is available in various depths for varying loadings, but each site should have a specific design detailed to ensure the correct depth of product is used. Unless the existing ground conditions are very soft then the following can apply:

- **50mm deep for Pedestrians and Cycleways, non-vehicular traffic**
- **75mm deep for Pedestrians, Cycleways and vehicles (up to 1.5 tons)**
- **100mm deep for Cars, 4 x Wheel Drives, Vans etc. (up to 6 tons)**
- **150mm deep for Fire Trucks, Removal Vehicles and Dust Carts (up to 20 tons)**
- **200mm deep for construction vehicles, cranes etc. (40 tons and above)**

The 3DCCS will be pinned in place using steel fixing pins to keep it open and fully expanded position whilst the cells are being filled and to stop the structure from being pushed up by migrating aggregate during the filling process. The fixing pins will be driven in so that they are just touching the top of the cells but do not compress the fabric.

The 3DCCS will be filled with clean, open-graded angular aggregate, normally in the particle size range of 5mm - 45mm, working toward the tree(s) from the furthest point away and using the filled sections as a platform.

A light vibratory compaction plate (whacker) will be used to settle the stone into the cells and the permeable surface will then be installed on top of the filled, cellular confinement system.
If the proportion of RPA covered by a no-dig surface is greater than 20%, the wearing surface must be permeable.

© Trevor Heaps Arboricultural Consultancy Ltd.

Photo 3: Three stages of a 'no-dig' driveway under construction.

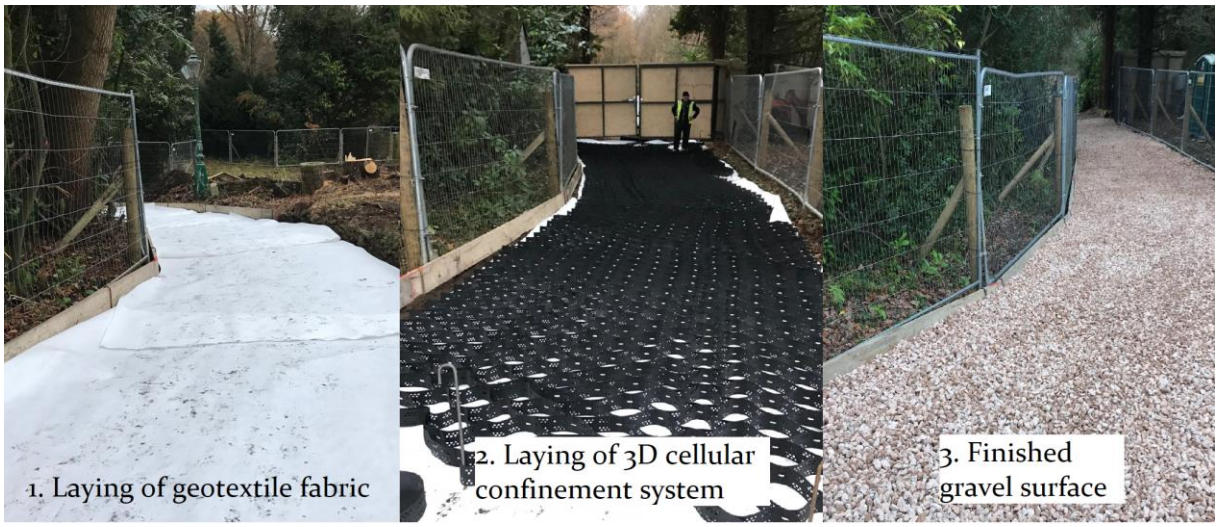

© Trevor Heaps Arboricultural Consultancy Ltd.

Protective fencing

The following is based on an extract from British Standard 5837:2012 - Trees in relation to design, demolition and construction– Recommendations.

The framework support (shown in Figure 2 and photo 1) is the usual method of support for 'Heras' fencing. Some variations are possible if site conditions are appropriate; i.e. support by wooden posts (75mm x 75mm x 2.75m) dug or concreted into the ground (dry mix concrete contained within a plastic bag), or if there is no pressure for access, a lighter form of netting on stakes.

Figure 2: Default specification for protective barrier (BS 5837:2012)

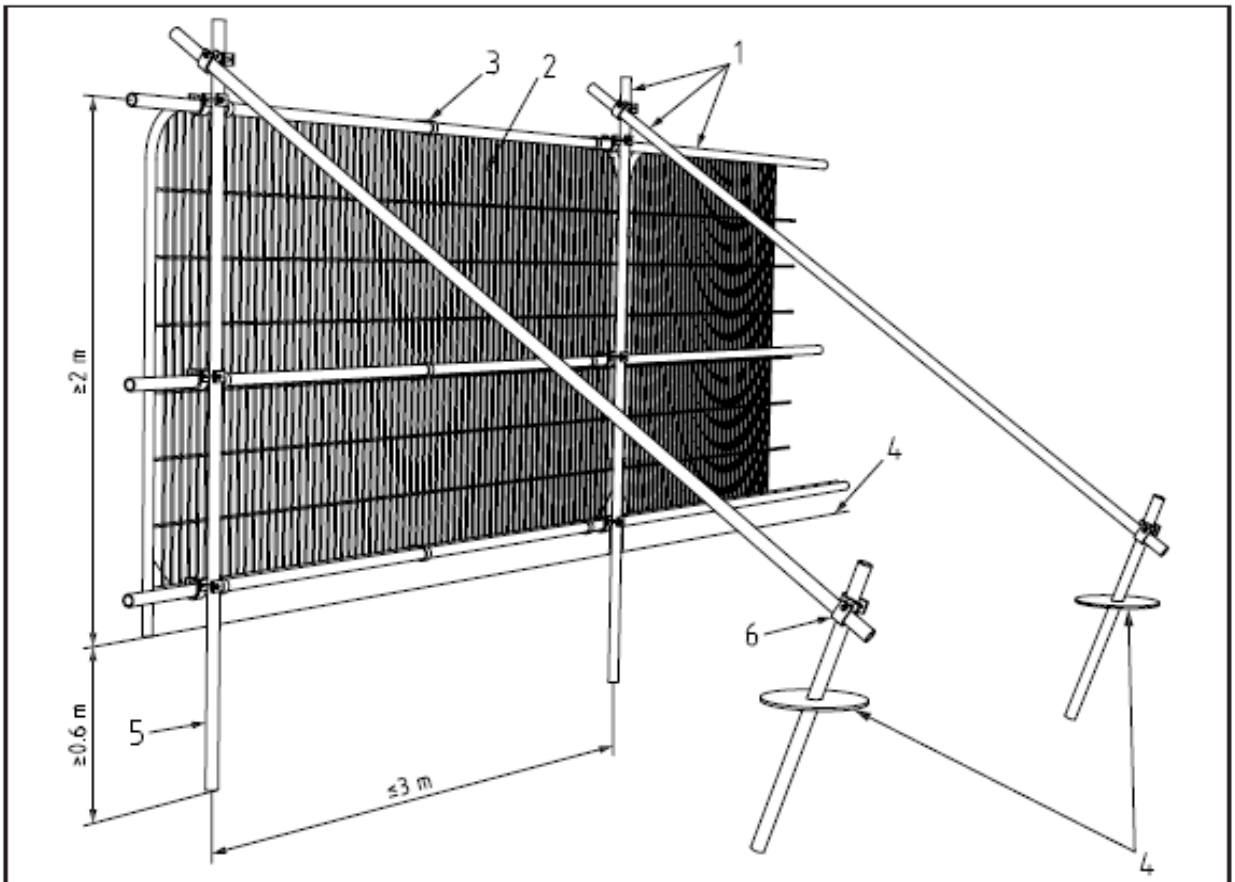

Key

1 Standard scaffold poles
2 Heavy gauge 2 m tall galvanized tube and welded mesh infill panels
3 Panels secured to uprights and cross-members with wire ties
4 Ground level
5 Uprights driven into the ground until secure (minimum depth 0.6 m)
6 Standard scaffold clamps

© Trevor Heaps Arboricultural Consultancy Ltd.

Photo 1: A worked example of the default specification for protective barrier (BS 837:2012)

Durable, all-weather signs are to be attached to the fencing (an example sign is provided below). These shall be printed, laminated and attached at regular intervals along the fencing.

Once erected, the protective fencing is to be regarded as sacrosanct and there is to be no access into the area protected by it - the construction exclusion zone (CEZ).

The protective fencing is to be maintained in good order, so it is fit for purpose throughout the construction process. The fencing will not be altered in any way, or prematurely removed without prior consent of the project arboriculturist and/or (if necessary) the LPA arboricultural officer.

Where specified in the AMS, the tree(s) stem/s shall be boxed off with wooden ply boards or wrapped in hessian and chestnut pale fencing. This will help avoid any direct damage to tree stems from passing machinery (see photo 2).

© Trevor Heaps Arboricultural Consultancy Ltd.

Photo 2: Trees protected by hessian & chestnut pale fencing / limbs protected by wooden boxing

© Trevor Heaps Arboricultural Consultancy Ltd.

TREE PROTECTION FENCING

KEEP OUT

This fencing must not be removed

or altered in any way without prior consultation with the project arboriculturist!

Please report any damage to trees and/or fencing to the site manager or the project arboriculturist

Trevor Heaps

07957 763 53

© Trevor Heaps Arboricultural Consultancy Ltd.

Removal of existing hard surfaces / rubble

Working off either an existing hard surface or suitable ground protection, machinery can be used to carefully peel back and remove existing tarmac or concrete. Other surfaces, such as rubble or block paving, must be removed by hand.

Sub-bases can be removed mechanically if it is unlikely that roots will be found beneath it (this must be approved by the arboricultural consultant). Underlying (soft) ground levels must be retained and will not be excavated.

All newly exposed soil and exposed roots will be covered with damp hessian or 100 mm of topsoil.

Machinery can be used to move the topsoil close to the exposed area, but the topsoil itself will be spread by hand.

Machinery will not be sited on any exposed rooting area / RPA.

Soft landscaping within or close to the Root Protection Areas (RPAs) of retained trees

The following precautions are necessary to avoid damage to trees (where activities are to take place within their RPAs):

- Ground levels will not be changed;
- Soil must be of good quality and free of contaminants and other foreign objects potentially injurious to tree roots. The topsoil must satisfy the requirements of BS3882:200;
- No heavy machinery will be operated within the RPAs of retained trees during the installation of soft landscaping;
- Unwanted vegetation shall be removed manually or by using systemic herbicide that will not damage tree roots;
- No fuels or chemicals shall be used or stored within these areas; and
- No irrigation or drainage pipes shall be installed within the RPAs

© Trevor Heaps Arboricultural Consultancy Ltd.

Appendix 5 – General precautions and further information

Figure 4: Common problems for trees on development sites
(http://www.leics.gov.uk/highway_req_development_part7_appendix_f)

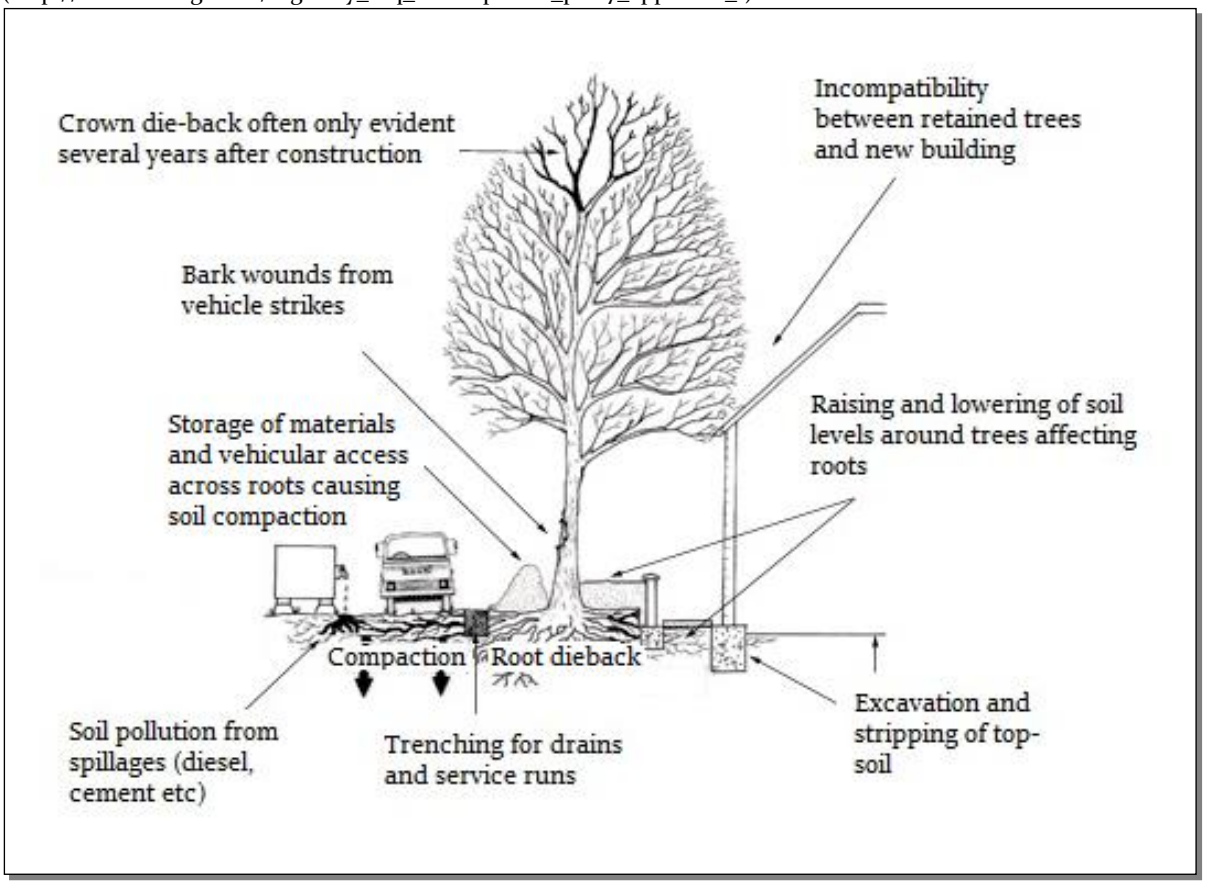

5.1 Services and drainage: Surface run-off water shall be sent to soakaways located outside the RPAs of retained tree(s). If trenching is required within the RPA of retained trees to provide routes for services, this work shall be undertaken using mole boring and / or hand digging (under arboricultural supervision).

5.2 Storage of materials: No materials or spoil are to be stored within areas protected by protective fencing and/or ground protection. The same applies for existing hard surfaces that are being used as ground protection.

5.3 Spillages: If any cement residues fall within root protection areas, it shall be swept up, bagged and removed from site – it shall <u>not</u> be washed away with water.

5.4 Demolition: Where any existing structures are to be demolished, they will be done so inwardly (away from root protection areas / retained soil).

© Trevor Heaps Arboricultural Consultancy Ltd.

5.5 Levels: There is to be no alteration of ground levels within the area protected by protective fencing and/or ground protection, unless previously specified and agreed upon. The same applies for existing hard surfaces that are being used as ground protection.

5.6 Fires: No fires are to be lit within 20 metres of the stems of retained trees.

5.7 Above ground damage to trees: Care must be taken in planning the location and operation of machinery to avoid above ground damage to trees. BS5837 (2012) Section 6.2.4.1 states '*Planning of site operations should take sufficient account of wide loads, tall loads and plant with booms, jibs and counterweights (including drilling rigs) in order that they can operate without contacting retained trees. Such contact can result in serious damage to trees and might make their safe retention impossible. Consequently, any transit or traverse of plant in proximity to trees should be conducted under the supervision of a banksman, to ensure that adequate clearance of trees is always maintained. Access facilitation pruning should be undertaken where necessary to maintain this clearance.*

5.8 Remedial works and soil improvement: Exposed soils are easily compacted resulting in loss of water and gaseous exchange; this can lead to root death (and subsequently tree death).

5.8.1 To relieve ground compaction, which may have resulted from the use of vehicles or by the storage of materials, the soils should be broken up to allow air to penetrate and for the soil structure to be restored. There are various methods to achieve this, such as: auguring the soil by hand / fork or pneumatic excavation (e.g. with an air spade); both should be combined with soil structure improvements (see 5.8.2).

5.8.2 The soil structure can be improved by incorporating a compost or mulch within the topsoil, of 75-100mm in depth. This can be spread over the surface and gently forked into the soil. If bark chip is used as mulch, NPK fertilizer should be added to counteract the nitrogen depletion of the soil. There is also the option of adding mycorrhizal fungal which may also improve root function.

5.9 Choosing an arborist: When appointing a tree works contractor, please only use properly qualified and experienced companies who comply with current British Standards (3998) and always check that they carry Public Liability Insurance within a minimum of £2,000,000 cover, and the relevant Employers Liability Insurance. A list of contractors approved by the Arboricultural Association can be found at www.trees.org.uk or by calling 01242 522 152.

© Trevor Heaps Arboricultural Consultancy Ltd.

Appendix 6 - Procedure to follow in case of damage to retained trees

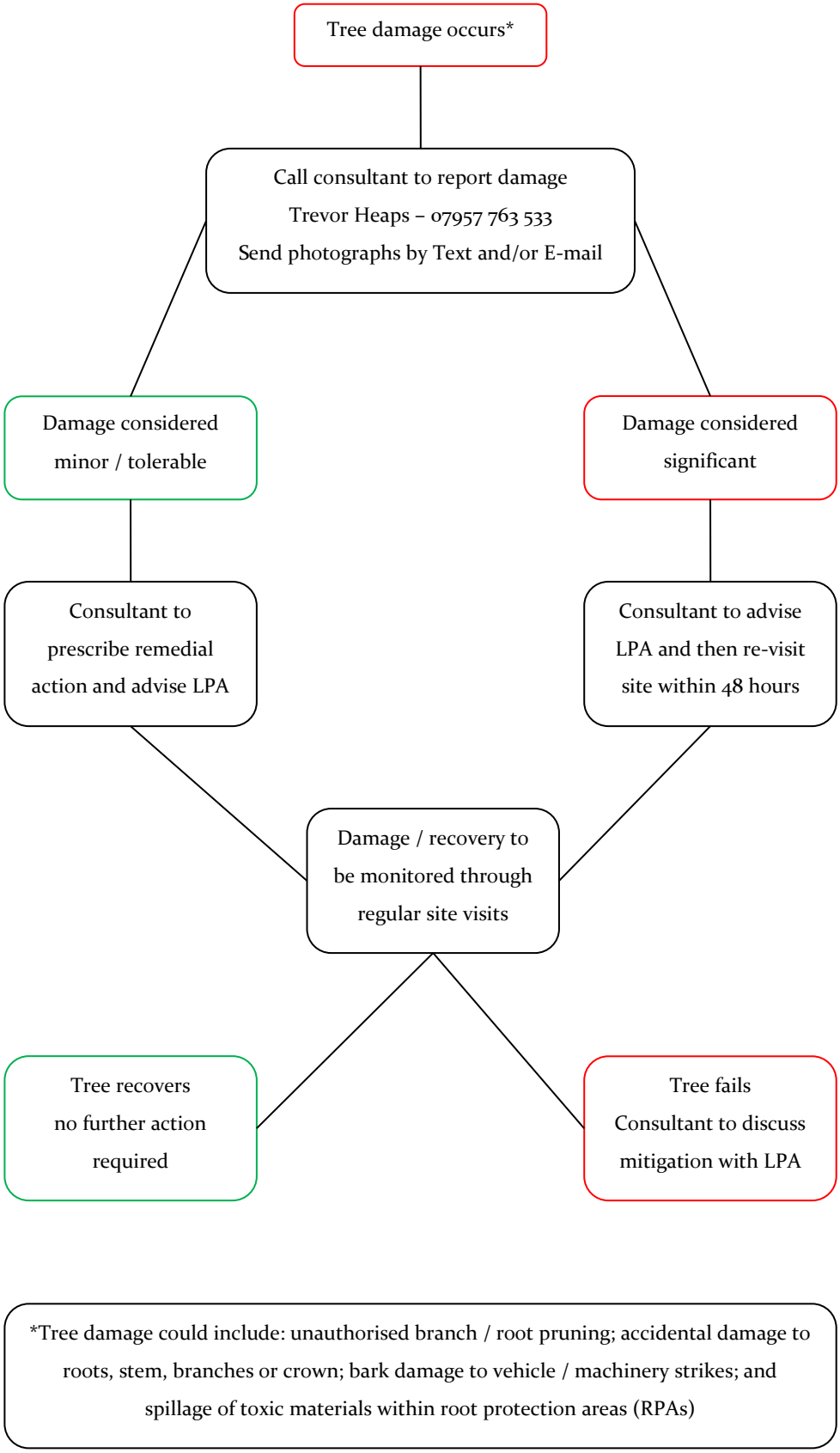

*Tree damage could include: unauthorised branch / root pruning; accidental damage to roots, stem, branches or crown; bark damage to vehicle / machinery strikes; and spillage of toxic materials within root protection areas (RPAs)

© Trevor Heaps Arboricultural Consultancy Ltd.

Appendix 7 - Induction form for all site personnel

Site name: .....

App. No.: .....

Appointed Site Supervisor: .....

- I have had explained to me by the Site Manager the key implications of the Arboricultural Method Statement relating to the development at the above site.
- I am aware that trees have shallow roots and any excavation works beneath the canopy could cause irreparable damage.
- I am aware that the tree protective fencing / ground protection must remain in its original position and must not be moved without the approval of the appointed Arboricultural Consultant.
- I understand that certain operations must be supervised by the appointed Arboricultural Consultant and that these must not start until the consultant is present and has given approval.
- I confirm that I will bring any concerns about potential damage to trees to the attention of the Site Manager.
- I am aware that I must not cause damage to any of the retained trees on or adjacent to the site. Damage may be caused by direct means (i.e. physical damage caused to roots or the trunk/branches of the tree) or by indirect means (e.g. by fire or toxic materials entering the rooting environment of the tree).

Print Name: .....

Sign Name: .....

Date: .....

© Trevor Heaps Arboricultural Consultancy Ltd.

Appendix 8 - Site inspection record

Date: Time: ..... Site:	Planning reference: .....

Those present in addition to project arboriculturist:

Client / Agent: .....

Project / Site manager: .....

LPA arboricultural officer: .....

Other (specify): .....

	Yes	No	Notes
Tree protection measures located in accordance with TPP?			
Any disturbance within construction exclusion zone?			
Any materials stored within construction exclusion zone?			
Any evidence of damage to tree roots, stems or canopies?			
Any works programmed before next planned site visit that may affect retained trees? (if yes, provide details below)			

Additional site visit required to ensure compliance with required action? (Y / N)
Proposed visit date:

Signed: Date:

© Trevor Heaps Arboricultural Consultancy Ltd.

Appendix 9: Tree Protection Plan

Where new hard surfaces (for paths and parking) conflict with the RPAs of retained trees, the new surfaces will be 'no-dig', permeable, and laid before construction commences (to act as ground protection)

At this site, operations are to occur in the following sequence:

1. Hold pre-commencement site meeting with project arboriculturist, building contractor, arboricultural officer and tree contractor (prior to the commencement of any development work commencing on site). The contractor will be required to read and sign the induction form (see Appendix 7).

2. Carry out tree work operations highlighted yellow in the tree data schedule (Appendix 2) and/or agreed at the pre-commencement site meeting. All tree works are to be carried out by a competent and experienced arborist to current British Standards (see Appendix 5.9 for assistance finding a suitable arborist).

3. Erect protective fencing along the position(s) shown by the dashed red line/s on the TPP.

4. Arboricultural Consultant to check Tree Protection at this stage.

5. Demolish existing buildings, leaving any suitable hard surfaces in situ (as ground protection).

6. Lay the 'no-dig' paths and parking areas, at the very least within the RPAs of the retained trees affected. This will act as ground protection during construction.

7. Arboricultural Consultant to check Tree Protection at this stage.

8. Commence construction

9. Working from on top of existing hard surfaces and/or suitable ground protection, construct the cycle store)

10. Working from on top of existing hard surfaces and/or suitable ground protection, excavate traditional strip foundation trenches for the sub-station.

11. Remove tree protection when all construction activity has ended.

12. Carry out tree planting and any other landscaping works.

The proposed cycle store will be constructed within the RPAs of T75 & T76. The areas affected (9% of T75 and 18% of T76) are moderate and so the store will sit on a floating concrete raft

Temporary ground protection should be able to support any traffic entering or using the site without being distorted or causing compaction of underlying soil and might comprise one of the following:

1. For pedestrian-movements only, a single thickness of scaffold boards placed either on top of a driven scaffold frame, to form a suspended walkway, or on top of a compression-resistant layer (e.g. 100 mm depth of woodchip), laid onto a geotextile membrane;

2. For pedestrian-operated plant up to a gross weight of 2 t, proprietary, inter-linked ground protection boards placed on top of a compression-resistant layer (e.g. 150 mm depth of woodchip), laid onto a geotextile membrane;

3. For wheeled or tracked construction traffic exceeding 2 t gross weight, an alternative system (e.g. proprietary systems or pre-cast reinforced concrete slabs) to an engineering specification designed in conjunction with arboricultural advice, to accommodate the likely loading to which it will be subjected.

NOTE: If ground protection is to be laid near areas to be excavated, sheet piling should be used to shore up the sides of the excavations prior to being used (by pedestrians or machinery)

Default specification for protective fencing

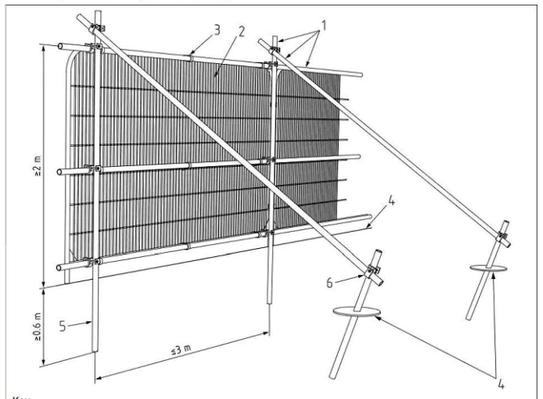

Key
1 Standard scaffold poles
2 Heavy gauge 2 m tall galvanized tube and welded mesh infill panels
3 Panels secured to uprights and cross-members with wire ties
4 Ground level
5 Uprights driven into the ground until secure (minimum depth 0.6 m)
6 Standard scaffold clamps

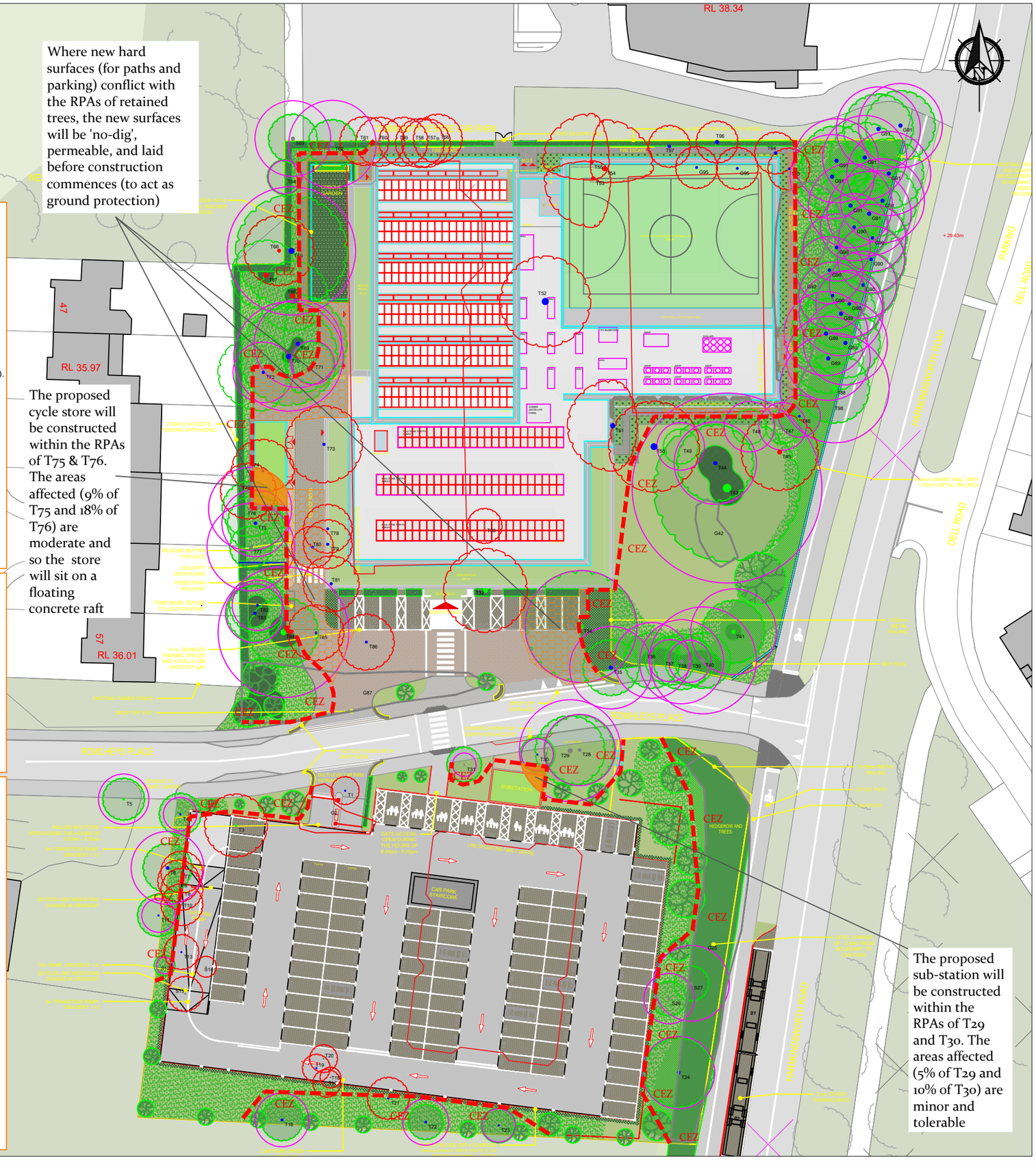

The proposed sub-station will be constructed within the RPAs of T29 and T30. The areas affected (5% of T29 and 10% of T30) are minor and tolerable

Plan Legend

- Tree to be retained
- Tree to be removed
- Category A Tree
- Category B Tree
- Category C Tree
- Category U Tree

Areas, groups or woodlands are shown as polygons using the same colours as above. Dashed lines show removals

- Root Protection Area (RPA) Original in light blue if amended.
- RPA Incursion - Extra care to be taken when excavating (see report)
- 'No-dig', permeable, load-spreading surface
- Protective fencing
- CEZ — Construction & storage exclusion zone
- Ground protection or existing hard surface to remain
- Suggested locations for new tree plantings

Scale: 1:500 @ A3 (0 – 10m – 20m)

Site Address: Y & WD Leisure Centre
Harmondsworth Rd, UB7 9LU

Client: L.B. Hillingdon	Drawing No: TH/A3/2122B/TPP
Job Ref: TH2122B	Date: 26/09/2019

Trevor Heaps
Aboricultural Consultancy Ltd

07957 763 533
trevor@trevorheaps.co.uk
www.trevorheaps.co.uk

End of Report