DRAINAGE DESIGN, MAINTENANCE and MANAGEMENT

of a site at

NEWPORT ROAD, HAYES

for

WESTWAY CONSTRUCTION LTD

Contaminated Land Solutions

t 020 8291 1354 e ask@gosolve.co.uk
4 De Frene Road, London, SE26 4AB

Project No 2077
Report ref: 2077-DS-1
Issued: 9 July 2021
Revision:

Document Control		
Revision	**Issue date**	**Reason for Revision**
Draft		
Original	09/07/2021	
A		
B		
C		
D		

CONTENTS

1 INTRODUCTION

2 SITE DESCRIPTION

3 PROPOSED DEVELOPMENT

4 MAINTENANCE

Appendix A – Site Location Plan
Appendix B – Proposed SUDS and Drainage Design
Appendix C – EA Flood Map
Appendix D – Calculations
Appendix E – Soakage Test
Appendix F – Specification for Below Ground Building Drainage

1. Introduction

a. This Drainage Management and Maintenance Report has been undertaken to support the planning application for new development at Newport Road.

b. This report is prepared for the sole use of Westway Construction LTD. No third party may rely upon this report unless express written permission is granted by Go Contaminated Land Solutions .

2. Site Description

a. The site is located Newport Rd, Hayes UB4 8JX. OS Grid Ref TQ 08817 81916.

b. The existing site consists of an existing commercial warehouse unit and office space with an external delivery yard and car parking spaces.

3. Proposed Development

a. It is proposed to undertake a development of the site comprising of a 4 story building providing 24 residential units with associated car parking and landscaped areas.

4. Maintenance

a. Maintenance of the drainage within the site is to be the responsibility of the property landlords.

b. Pervious Pavement - Regular inspections are required to ensure the long term operation of the petrol interceptor. Inspections and cleaning should be carried out annually or as required. All maintenance and inspections should be carried out by experienced personnel.

c. Attenuation Tank - Regular inspections are required to ensure the long term operation of the attenuation tank. These inspections should be carried out monthly for the first three months of operation and annually thereafter. Any maintenance work required identified during the inspections should carried out as required. All maintenance and inspections should be carried out by experienced personnel.

d. Gullies - Regular inspections and maintenance are required to ensure the long term operation of the gullies in the development. Inspections and cleaning should be carried out annually or as required. All maintenance and inspections should be carried out by experienced personnel.

e. Drainage channels - Regular inspections and maintenance are required to ensure the long term operation of the drainage channels in the development. Inspections and cleaning should be carried out annually or as required. All maintenance and inspections should be carried out by experienced personnel.

f. Flow control device - Regular inspections should be carried out to ensure the long term operation of the drainage system. Inspections should be carried out annually or as required. Any maintenance work required identified during the inspections should carried out as required. All maintenance and inspections should be carried out by experienced personnel.

g. Manholes - Regular inspections should be carried out to ensure the long term operation of the drainage system. Inspections should be carried out annually or as required. Any maintenance work required identified during the inspections should carried out as required. All maintenance and inspections should be carried out by experienced personnel.

h. Pipelines -Regular inspections should be carried out to ensure the long term operation of the drainage system. Inspections should be carried out annually or as required. Any maintenance work required identified during the inspections should carried out as required. All maintenance and inspections should be carried out by experienced personnel.

This document has been prepared for the titled project and should not be relied upon or used for any other project without an independent check being carried out as to its suitability and the prior written authority of GO Contaminated Land Solutions Ltd being obtained. No responsibility or liability is accepted for the consequences of this document being used for a purpose other than that for which it was commissioned. Any person using or relying on this document for such other purpose will by such use or reliance be taken to confirm his agreement to indemnify GO Contaminated Land Solutions Ltd for all loss or damage resulting therefrom. GO Contaminated Land Solutions Ltd accepts no responsibility or liability for this document to any party other than Westway Construction Limited by whom it was commissioned.

Contaminated
Land
Solutions

Appendix A – Site Location Plan

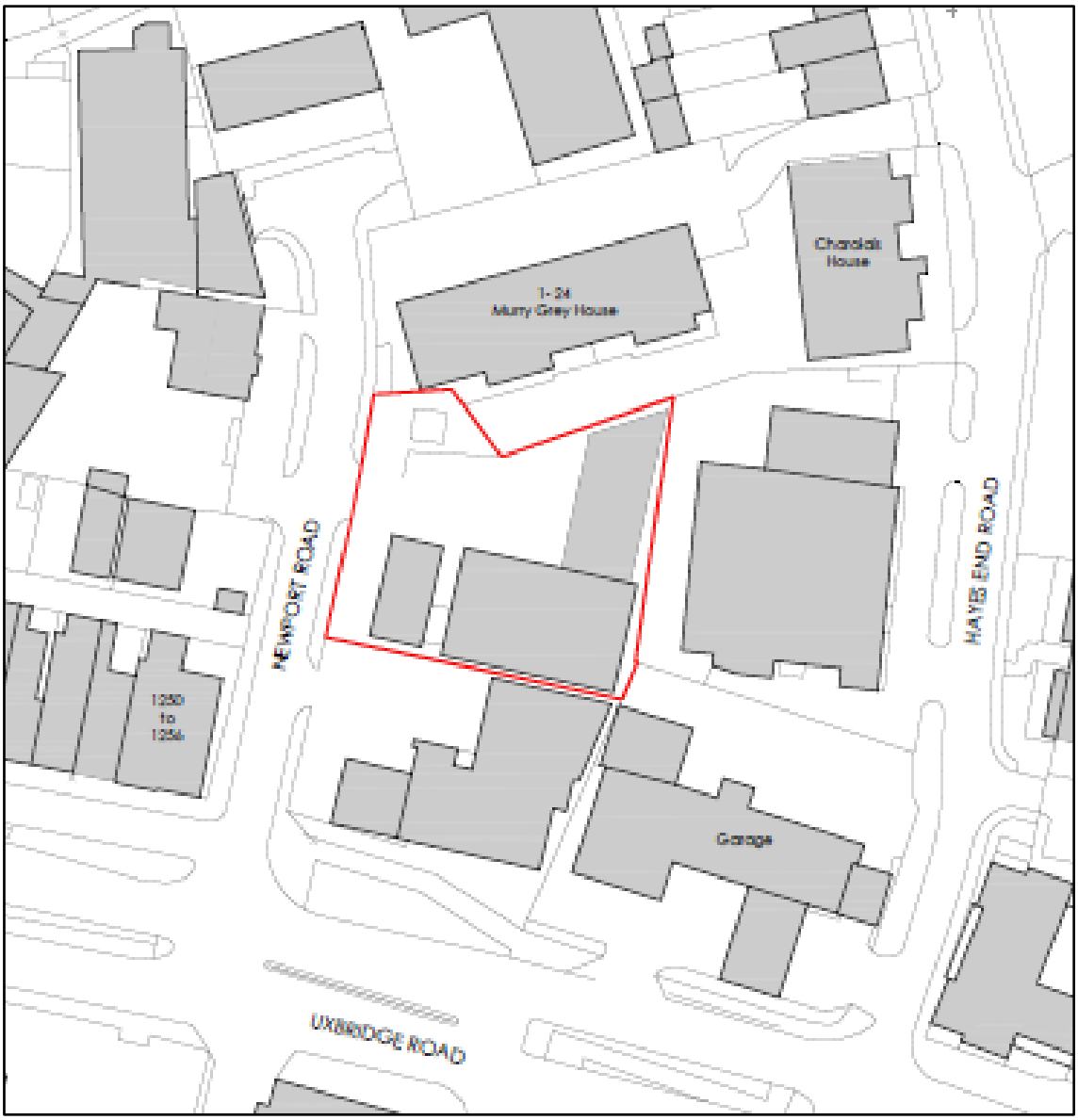
1-24
Murry Grey House
Charolais
House
NEWPORT ROAD
HAYES END ROAD
1250
to
1256
Garage
UXBRIDGE ROAD

Contaminated
Land
Solutions

Appendix B – Proposed SUDS and Drainage Design

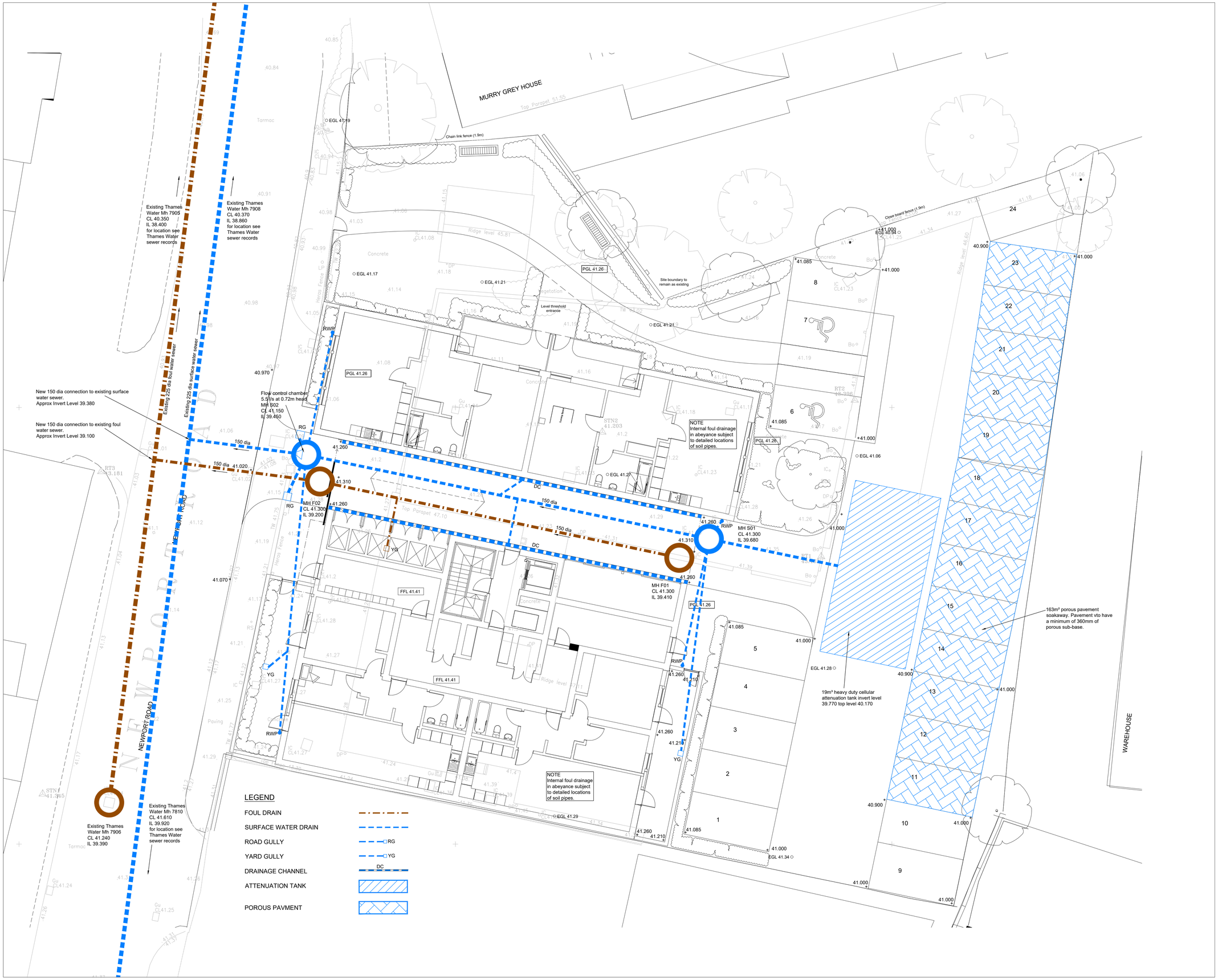

CDM REGULATION: NO DRAWING OR OTHER DESIGN INFORMATION SHOULD BE READ WITHOUT REFERENCE TO THE HEALTH AND SAFETY PLAN.

THIS DRAWING IS TO BE READ IN CONJUNCTION WITH ALL RELEVANT ARCHITECTS, ENGINEERS AND SPECIALIST SUB-CONTRACTORS DRAWINGS AND SPECIFICATIONS AND EMPLOYER'S SPECIFICATION. ANY DISCREPANCIES BETWEEN THESE DRAWINGS ARE TO BE REPORTED IMMEDIATELY.

SITE IS TO VERIFY ALL DIMENSIONS PRIOR TO CONSTRUCTION. THIS DRAWING IS NOT TO BE SCALED IN HARD FORMAT AND/OR ELECTRONIC FORMAT.

DRAINAGE

1. INVERT LEVELS AND POSITIONS OF EXISTING DRAINS / CHAMBERS / SEWERS WHERE NEW CONNECTIONS ARE TO BE MADE MUST BE CHECKED AND CONFIRMED TO THE ENGINEER PRIOR TO THE COMMENCEMENT OF ANY WORKS.
2. THE CONTRACTOR IS MAKE APPLICATION TO THE WATER AUTHORITY FOR THE DIRECT OR INDIRECT CONNECTIONS FOR THE FOUL AND SURFACE WATER TO THE PUBLIC SEWERS.
3. ALL DRAINAGE WORKS SHALL BE CARRIED OUT IN ACCORDANCE WITH THE REQUIREMENTS OF THE LOCAL AUTHORITY AND IN CONJUNCTION WITH ALL RELEVANT BRITISH STANDARDS, CODES OF PRACTICE AND 'SEWERS FOR ADOPTION' AS APPROPRIATE.
4. ALL DRAINAGE SHALL COMPLY WITH THE TYPICAL DETAILS AND THE REQUIREMENTS OF BSEN 752.
5. ANY PART OF THE EXISTING DRAINAGE SYSTEM TO BE RETAINED AS PART OF THE NEW SCHEME SHALL BE CLEANED AND INSPECTED. ANY STRUCTURAL DEFECTS SHALL BE REPAIRED USING APPROPRIATE AND APPROVED MEANS.
6. ALL EXISTING DRAINS WHICH ARE NOT INCORPORATED IN THE NEW DESIGN AND WHICH ARE NOT REQUIRED TO BE DEMOLISHED DURING CONSTRUCTION OF THE NEW WORKS, SHALL BE FILLED BY INJECTING A 10:1 MIX BY WEIGHT OF PULVERISED FUEL ASH TO ORDINARY PORTLAND CEMENT WITH SUFFICIENT WATER ADDED TO GIVE A CREAMY CONSISTENCY AND ENSURE OPTIMUM COMPACTION. CARE SHALL BE TAKEN TO DRAW OFF ANY EXCESS WATER AFTER THE MIX HAS BEEN PLACED. THE SLURRY SHALL BE TRANSFERRED BY A SUITABLE CHUTE TO THE DRAIN THROUGH A 25MM MESH SCREEN TO PREVENT BLOCKAGE.
7. FOR SETTING-OUT DIMENSIONS OF SVP'S, RWP'S ETC. REFER TO ARCHITECT'S OR MECHANICAL ENGINEER'S DRAWINGS.
8. SEWERS UP TO 300mm DIAMETER TO BE VITRIFIED CLAY, EXTRA STRENGTH TO BSEN 295 OR BS 65 WITH PLAIN ENDED SLEEVED OR SOCKETED FLEXIBLE JOINTS OR PLASTIC TO BS 4660 AND BS:EN 1401-1. ALL SEWERS OF 375mm DIAMETER AND OVER, TO BE SULPHATE RESISTING CONCRETE CLASS M WITH SOCKETED FLEXIBLE JOINTS. ALL PLASTIC PIPEWORK SHALL BE CAPABLE OF DEMONSTRATING A JETTING RESISTANCE OF 4000psi (280bar) WITHOUT DAMAGE WHEN TESTED IN ACCORDANCE WITH WITH SECTION 6.10 OF WIS 4-35-01.
9. INVERTS OF INCOMING BRANCHES SHALL BE AT SPRINGING LEVEL TO THE MAIN PIPE AND FORMED GENERALLY USING CHANNEL PIPES AND SLIPPER BENDS, CUT TO SUIT.
10. ALL PRECAST CONCRETE UNITS USED IN THE DRAINAGE WORKS SHALL BE MANUFACTURED USING SULPHATE RESISTING CEMENT.
11. MANHOLE COVERS AND FRAMES IN VEHICULAR AREAS SHALL BE CAST IRON TO BSEN 124, GRADE D400 AND IN PEDESTRIAN AREAS GRADE B125. COVERS AND FRAMES IN BLOCK PAVED AREAS SHALL BE RECESSED FABRICATED STEEL AS MANUFACTURED BY DRAINAGE SYSTEMS, LIST NO. 6333, OR SIMILAR APPROVED.
12. COVER LEVELS ARE TO ADJUSTED LOCALLY TO SUIT FINISHED GROUND LEVELS.
13. DRAINAGE CHANNELS SHALL BE LAID STRICTLY IN ACCORDANCE WITH THE MANUFACTURER'S RECOMMENDATIONS WITH PARTICULAR CARE BEING TAKEN TO PREVENT DAMAGE DURING INSTALLATION, PAVEMENT CONSTRUCTION OR SURFACING ETC.
14. ALL ROAD GULLY AND DRAINAGE CHANNEL CONNECTIONS SHALL BE 150MM DIAMETER UNLESS OTHERWISE SPECIFIED.
15. ALL FOUL AND RAIN WATER PIPE CONNECTIONS SHALL BE 100MM DIAMETER UNLESS OTHERWISE SPECIFIED.
16. INTERNAL DRAINAGE SHOWN IS INDICATIVE. FINAL DESIGN SUBJECT TO FINAL INTERNAL LAYOUT.

Rev	Date	Description	Drn	Chk'd
P1	08/07/21	PRELIMINARY ISSUE	GHB	TS

Revisions

Drawing Originator

PAUL OWEN ASSOCIATES
CONSULTING ENGINEERS - TECHNICAL ADVISERS
Studio D128, 62 Triton Road, West Dulwich, London SE21 8DE
t: 020 3176 7726 www.paulowen.co.uk

Drawing Status

PRELIMINARY

Project Name

NEWPORT ROAD

Drawn by	Drawn Date	Checked by	Scale
GHB	08/07/21	TS	1:100

Title

Original drawing sheet is A1

DRAINAGE LAYOUT

Drawing Number 221038/100

Revision P1

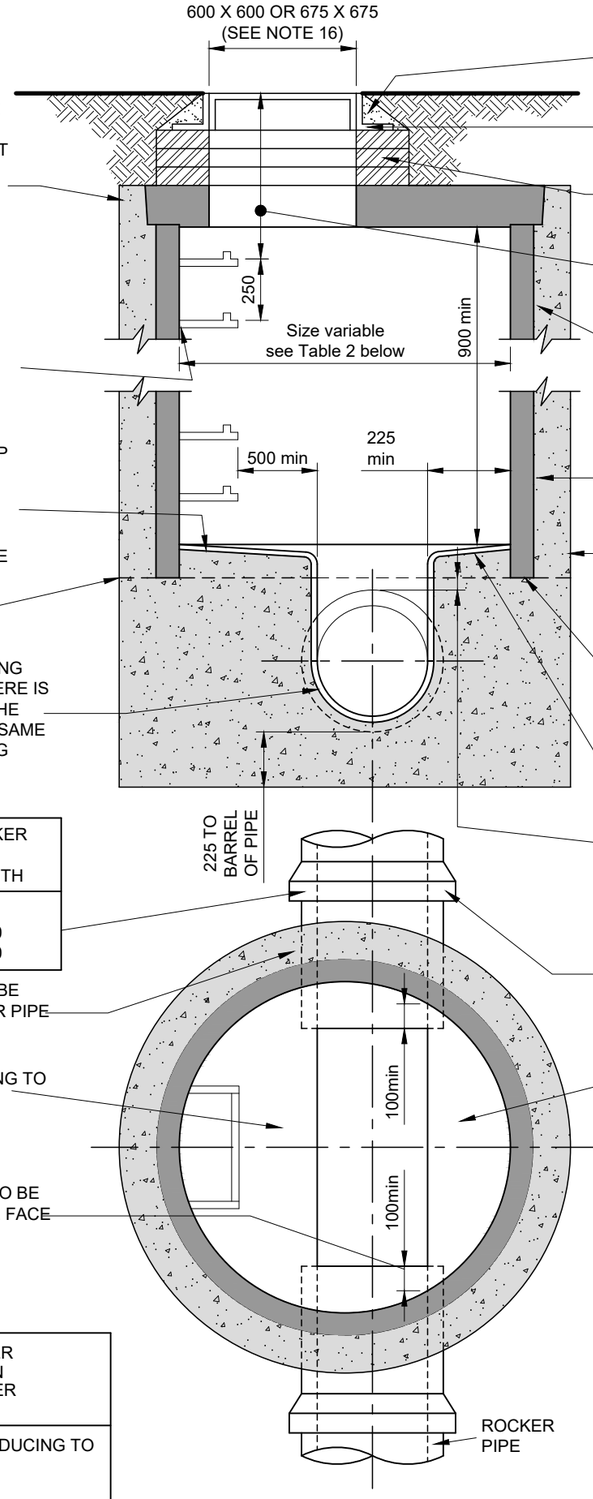

HEAVY DUTY REINFORCED CONCRETE COVER SLAB BEDDED WITH MORTAR (SEE NOTE 6) UNLESS SHOWN ON CONTRACT SPECIFIC LAYOUT DRG./SCHEDULE WHERE CERTAIN LOCAL/COUNTY COUNCILS MAY REQUIRE DESIGN OF COVER SLAB TO BS 5400 AND BD37/01 FOR CHAMBER WITH DIAMETER GREATER THAN 1350mm.

DOUBLE STEP RUNGS IN ACCORDANCE WITH BS EN 13101.

HIGH STRENGTH CONCRETE TOPPING TO BE BROUGHT UP TO A DENSE SMOOTH FACE, NEATLY SHAPED AND FINISHED TO ALL BRANCH CONNECTIONS, MINIMUM THICKNESS 20mm, (SEE NOTE 13)

CONSTRUCTION JOINT

INVERTS TO BE FORMED USING CHANNEL PIPES. WHERE THERE IS NO CHANGE OF DIAMETER THE INVERT SHALL FOLLOW THE SAME GRADIENT AS THE OUTGOING SEWER.

TABLE 1

PIPE DIAMETER	ROCKER PIPE LENGTH
150 - 600 675 - 750 OVER 750	600 1000 1250

SHORT LENGTH OF PIPE TO BE SIMILAR LENGTH TO ROCKER PIPE (SEE TABLE 1)

MINIMUM WIDTH OF BENCHING TO BE 500mm.

PIPE JOINT WITH CHANNEL TO BE LOCATED MIN. 100mm INSIDE FACE OF CHAMBER.

TABLE 2

DIAMETER OF LARGEST PIPE IN MANHOLE	CHAMBER SECTION DIAMETER
LESS THAN 375 375 - 450 500 - 700 750 - 900	1200 (REDUCING TO 1350 1500 1800

MORTAR HAUNCHING TO COVER AND FRAME. COVER AND FRAME BEDDED ON MORTAR (SEE NOTE 6)

DUCTILE IRON COVER AND FRAME (SEE NOTE 4)

BRICKWORK 4 COURSES MAX. 2 COURSES MIN. (SEE NOTE 5)

675mm MAX. TO FIRST STEP

PRECAST CONCRETE CHAMBER SECTIONS TO BE BEDDED WITH MORTAR (SEE NOTE 10)

LIFTING EYES IN CONCRETE RINGS TO BE POINTED

CONCRETE SURROUND 150mm THICK (SEE NOTE 11)

BOTTOM CHAMBER SECTION TO BE BUILT INTO BASE CONCRETE MINIMUM 75mm.

BENCHING SLOPE TO BE 1 IN 10 TO 1 IN 30

DISTANCE BETWEEN TOP OF PIPE AND UNDERSIDE OF PRECAST CHAMBER TO BE 50mm MIN TO 300mm MAX.

JOINT TO BE AS CLOSE AS PRACTICABLE TO FACE OF MANHOLE TO PERMIT SATISFACTORY JOINT AND SUBSEQUENT MOVEMENT.

MINIMUM WIDTH OF BENCHING TO BE 225mm.

NOTES

1. FOR DATED REFERENCES, SUBSEQUENT AMENDMENTS TO, OR REVISIONS OF, ANY OF THESE PUBLICATION DO NOT APPLY. FOR UNDATED REFERENCES, THE LASTEST EDITION OF THE PUBLICATION REFERRED TO APPLIES.
2. THIS DRAWING IS TO BE READ IN CONJUNCTION WITH ALL OTHER RELEVANT DRAWINGS AND THE SPECIFICATION.
3. DO NOT SCALE FROM THIS DRAWING, USE FIGURED DIMENSIONS ONLY. ALL DIMENSIONS ARE IN MILLIMETRES. MANHOLE COVERS AND FRAMES - SHALL COMPLY WITH THE RELEVANT PROVISIONS OF BS EN 124. THEY SHALL BE OF A NON-ROCKING DESIGN WHICH DOES NOT RELY ON THE USE OF CUSHION INSERTS. CLASS D400 COVERS SHALL BE USED IN CARRIAGEWAYS OF ROADS (INCLUDING PEDESTRIAN STREETS), HARD SHOULDERS AND PARKING AREAS USED BY ALL TYPES OF ROAD VEHICLE. CLASS B125 SHALL BE USED IN FOOTWAYS, PEDESTRIAN AREAS AND COMPARABLE LOCATIONS. MINIMUM FRAME DEPTHS FOR NRSWA ROAD CATEGORIES I TO IV SHALL BE 150mm (EXCEPT RESIDENTIAL CUL-DE-SACS WHERE THE MINIMUM FRAME DEPTH SHALL BE 100mm). WHERE HEAVIER THAN NORMAL TRAFFIC LOADING IS EXPECTED (IE BRAKING OR TURNING NEAR JUNCTIONS) E600 COVERS SHALL BE USED. ALL MANHOLES COVERS SHALL BE THE NON-VENTILATING TYPE AND HAVE CLOSED KEYWAYS. IN VERGES COVERS SHALL BE POSITIONED ON THE SIDE FURTHEST FROM THE CARRIAGEWAY. MANHOLE COVERS SHALL BE BEDDED ON A PROPRIETARY POLYESTER BEDDING MORTAR IN ROAD CATEGORIES I TO III OR WHERE HIGH TRAFFIC LOADS ARE EXPECTED.
5. BRICKS - SHALL BE SOLID CLASS B ENGINEERING COMPLYING WITH THE RELEVANT PROVISIONS OF BS 3921. ALL BRICKS SHALL BE FROST RESISTANT CATEGORY F.
6. MORTAR - SHALL BE MIXED ONLY AS AND WHEN REQUIRED, IN THE PROPORTION 1:3 CEMENT:SAND BY VOLUME. ALL MORTAR SHALL BE CONVEYED FRESH TO THE WORKS AS REQUIRED FOR USE. MORTAR WHICH HAS BEGUN TO SET OR WHICH HAS BEEN MIXED FOR A PERIOD OF MORE THAN 1 HOUR SHALL NOT BE USED.
7. SANDS FOR MORTAR - SHALL BE WASHED SAND, COMPLYING WITH BSEN 13139 AND PD 6682-3.
8. CEMENT (FOR INSITU CONCRETE AND MORTAR) - SHALL BE SULPHATE RESISTING PORTLAND CEMENT (SRPC) OMPLYING WITH BS 4027. CEMENT (FOR PRECAST CONCRETE PIPES OR MANHOLES) - SHALL BE A COMBINATION OF CEMENT CONFORMING TO BS 12 AND G.G.B.S OR P.F.A. OR CEMENT CONFORMING TO BS 4027 ALONE TO MEET UP TO AND INCLUDING DESIGN SULPHATE CLASS DS-3 AS DEFINED IN BRE SPECIAL DIGEST 1, 2001.
9. WATER FOR USE WITH CEMENT - SHALL BE OF POTABLE QUALITY.
10. PRECAST CONCRETE MANHOLE COMPONENTS - SHALL COMPLY WITH THE RELEVANT PROVISIONS OF BSEN 1917 AND BS 5911. UNITS WHICH BED INTO BASES SHALL BE MANUFACTURED SO THAT IMPOSED VERTICAL LOADS ARE TRANSMITTED DIRECTLY VIA THE FULL WALL THICKNESS OF THE UNIT. FOR JOINTS BETWEEN UNITS AND THE UNDERSIDE OF SLABS, JOINT PROFILES SHALL BE CAPABLE OF WITHSTANDING APPLIED LOADINGS FROM SUCH SLABS, AND SPIGOT-ENDED SECTIONS SHALL ONLY BE USED WHERE THE SOFFIT OF THE SLAB IS RECESSED TO RECEIVED THEM.
11. IN SITU CONCRETE - STANDARD CONCRETE MIX GEN3 IN ACCORDANCE WITH BS 8500 AND BS EN 206-1 SHALL BE USED WITH A 20mm NOMINAL MAXIMUM SIZE OF AGGREGATE AND A CLASS S2 (70mm) SLUMP. ADMIXTURES (INCLUDING CALCIUM CHLORIDE AND PIGMENTS) SHALL NOT BE USED IN THE PRODUCTION OF CONCRETE. COMPRESSIVE STRENGTH TESTING SHALL NOT BE USED TO JUDGE THE COMPLIANCE OF A CONCRETE, BUT WHERE REQUIRED THE CONTRACTOR SHALL PROVIDE EVIDENCE OF THE BATCH MASSES USED TO PRODUCE ANY CONCRETE. NB STANDARDISED PRESCRIBED CONCRETE PRODUCED USING SULFATE-RESISTING PORTLAND CEMENT IS NOT INTENDED TO PRODUCE SULFATE-RESISTING CONCRETE. WHERE THE DESIGN SULPHATE CLASS IS HIGHER THAN DESIGN CHEMICAL CLASS DS-2, IN-SITU (AND PRECAST CONCRETE, WHERE APPLICABLE) SHALL BE AS DESIGNATED ON THE CONTRACT SPECIFIC DRAINAGE LAYOUT DRAWING, MANHOLE SCHEDULE OR SPECIFICATION.
12. AGGREGATES FOR CONCRETE - SHALL COMPLY WITH THE RELEVANT PROVISIONS OF BSEN 12620 AND PD 6682
13. HIGH STRENGTH CONCRETE TOPPING - SHALL BE PRODUCED, LAID AND FINISHED IN ACCORDANCE WITH THE RELEVANT PROVISIONS OF BS 8204: PART 2 AND THE FOLLOWING APPROXIMATE MIX PROPORTIONS BY WEIGHT SHALL BE USED: 1 PART CEMENT, 1 PART NATURAL SAND AND 2 PARTS SINGLE SIZED COARSE AGGREGATE.
14. AGGREGATE FOR HIGH STRENGTH CONCRETE TOPPING - SHALL COMPLY WITH BSEN 12620 AND PD 6682-1 AND BE 10mm NOMINAL SIZE, GRADED IN ACCORDANCE WITH TABLE 6 E.1 IN PD 6682-1.
15. OUTGOING PIPES SHALL BE FITTED WITH GUARD BARS, SAFETY CHAINS OR OTHER SAFETY DEVICES IN ACCORDANCE WITH THE ADOPTING AUTHORITY'S POLICY. STAINLESS STEEL SAFETY CHAINS SHALL BE MANUFACTURED FROM GRADE 316S31 STEEL COMPLYING WITH BS 970-1. CHAIN LINKS SHALL BE WELDED AND HAVE AN INTERNAL LENGTH NOT EXCEEDING 45mm AND AN INTERNAL WIDTH OF BETWEEN 12mm AND 18mm. THE FINS CAUSED BY WELDING SHALL BE REMOVED AND THE WELD SHALL BE SMOOTHLY FINISHED ALL ROUND. WHEN TESTED IN ACCORDANCE WITH CLAUSE 7.3 OF BS 4942-2, EACH CHAIN SHALL WITHSTAND A BREAKING FORCE OF 30kN AND A PROOF FORCE OF 15kN.
16. ALL ADOPTABLE WORKS SHALL BE CARRIED OUT IN ACCORDANCE WITH SEWERS FOR ADOPTION 7TH EDITION.
17. ALL THE ABOVE REQUIREMENTS SHALL APPLY UNLESS OTHERWISE STATED IN THE DRAINAGE LAYOUT DRAWING, MANHOLE SCHEDULE OR SPECIFICATION. IN THE EVENT OF A CONTRADICTION THE CONTRACT SPECIFIC DOCUMENTS SHALL BE DEEMED TO PREVAIL.

CDM REGULATION: NO DRAWING OR OTHER DESIGN INFORMATION SHOULD BE READ WITHOUT REFERENCE TO THE HEALTH AND SAFETY PLAN.

THIS DRAWING IS TO BE READ IN CONJUNCTION WITH ALL RELEVANT ARCHITECTS, ENGINEERS AND SPECIALIST SUB-CONTRACTORS DRAWINGS AND SPECIFICATIONS AND EMPLOYER'S SPECIFICATION. ANY DISCREPANCIES BETWEEN THESE DRAWINGS ARE TO BE REPORTED IMMEDIATELY.

SITE IS TO VERIFY ALL DIMENSIONS PRIOR TO CONSTRUCTION.
THIS DRAWING IS NOT TO BE SCALED IN HARD FORMAT AND/OR ELECTRONIC FORMAT.

Rev	Date	Description	Drn	Chk'd
P1	08/07/21	PRELIMINARY ISSUE	GHB	TS

Revisions

PAUL OWEN ASSOCIATES
CONSULTING ENGINEERS - TECHNICAL ADVISERS
Studio D128, 62 Triton Road, West Dulwich,
London SE21 8DE
t: 020 3176 7726 www.paulowen.co.uk

Project Name: NEWPORT ROAD

Title: MANHOLE DEATIL

Original drawing sheet is A3

Drawn by	Drawn Date	Checked by	Scale
GHB	08/07/21	TS	NTS

Drawing Number: 221038/101

Revision: P1

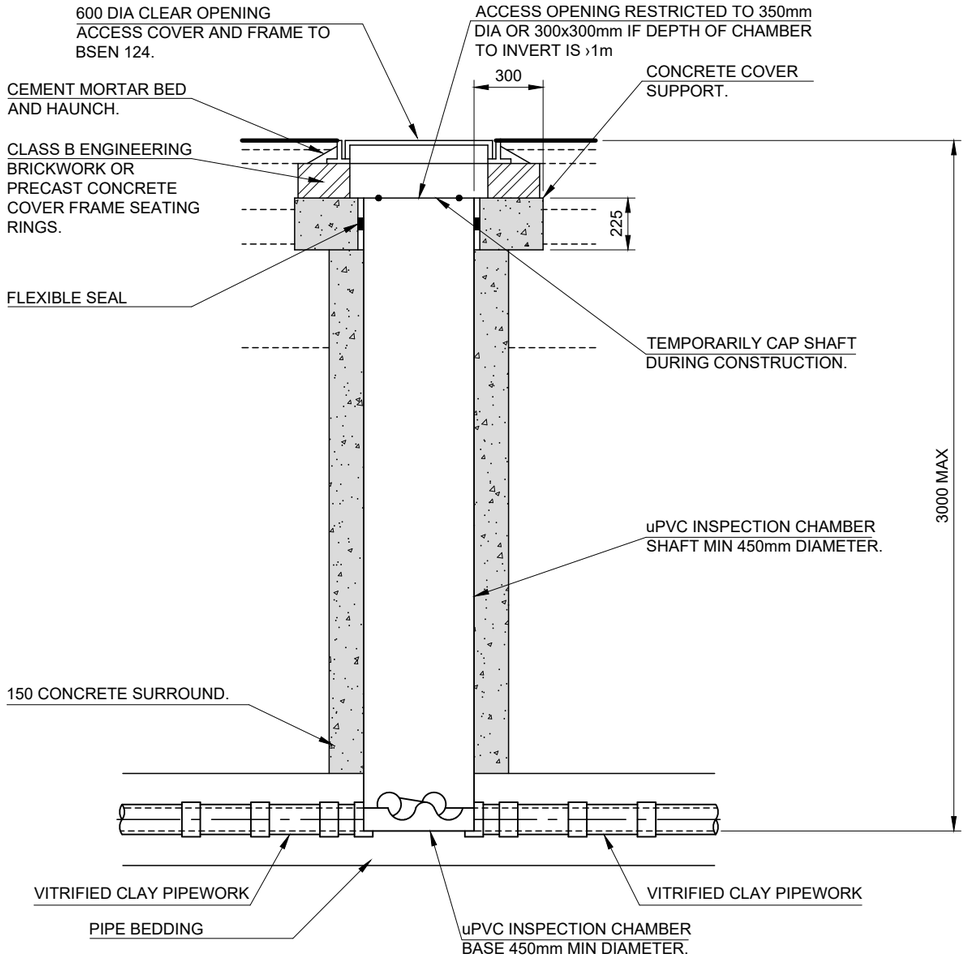

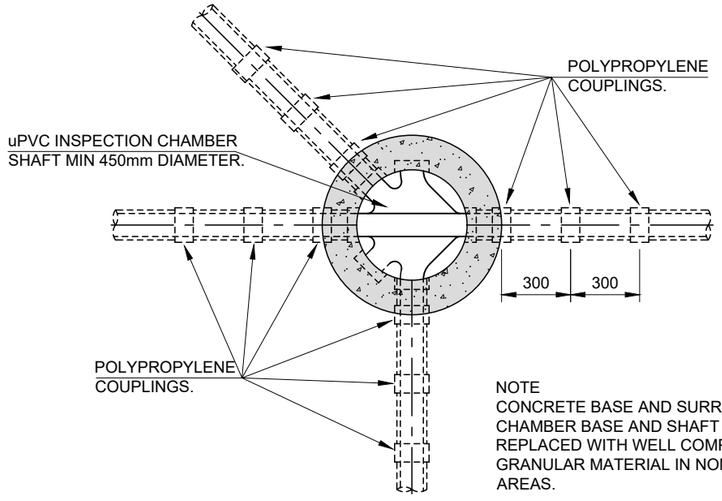

NOTE
CONCRETE BASE AND SURROUND TO CHAMBER BASE AND SHAFT CAN BE REPLACED WITH WELL COMPACTED GRANULAR MATERIAL IN NON VEHICULAR AREAS.

NOTES

1. FOR DATED REFERENCES, SUBSEQUENT AMENDMENTS TO, OR REVISIONS OF, ANY OF THESE PUBLICATION DO NOT APPLY. FOR UNDATED REFERENCES, THE LASTEST EDITION OF THE PUBLICATION REFERRED TO APPLIES.

2. THIS DRAWING IS TO BE READ IN CONJUNCTION WITH ALL OTHER RELEVANT DRAWINGS AND THE SPECIFICATION.

3. DO NOT SCALE FROM THIS DRAWING, USE FIGURED DIMENSIONS ONLY. ALL DIMENSIONS ARE IN MILLIMETRES.

4. MANHOLE COVERS AND FRAMES - SHALL COMPLY WITH THE RELEVANT PROVISIONS OF BS EN 124. THEY SHALL BE OF A NON-ROCKING DESIGN WHICH DOES NOT RELY ON THE USE OF CUSHION INSERTS. CLASS D400 COVERS SHALL BE USED IN CARRIAGEWAYS OF ROADS (INCLUDING PEDESTRIAN STREETS), HARD SHOULDERS AND PARKING AREAS USED BY ALL TYPES OF ROAD VEHICLE. CLASS B125 SHALL BE USED IN FOOTWAYS, PEDESTRIAN AREAS AND COMPARABLE LOCATIONS. MINIMUM FRAME DEPTHS FOR NRSWA ROAD CATEGORIES I TO IV SHALL BE 150mm (EXCEPT RESIDENTIAL CUL-DE-SACS WHERE THE MINIMUM FRAME DEPTH SHALL BE 100mm). WHERE HEAVIER THAN NORMAL TRAFFIC LOADING IS EXPECTED (IE BRAKING OR TURNING NEAR JUNCTIONS) E600 COVERS SHALL BE USED. ALL MANHOLES COVERS SHALL BE THE NON-VENTILATING TYPE AND HAVE CLOSED KEYWAYS. IN VERGES COVERS SHALL BE POSITIONED ON THE SIDE FURTHEST FROM THE CARRIAGEWAY. MANHOLE COVERS SHALL BE BEDDED ON A PROPRIETARY POLYESTER BEDDING MORTAR IN ROAD CATEGORIES I TO III OR WHERE HIGH TRAFFIC LOADS ARE EXPECTED.

5. BRICKS - SHALL BE SOLID CLASS B ENGINEERING COMPLYING WITH THE RELEVANT PROVISIONS OF BS 3921. ALL BRICKS SHALL BE FROST RESISTANT CATEGORY F.

6. MORTAR - SHALL BE MIXED ONLY AS AND WHEN REQUIRED, IN THE PROPORTION 1:3 CEMENT:SAND BY VOLUME. ALL MORTAR SHALL BE CONVEYED FRESH TO THE WORKS AS REQUIRED FOR USE. MORTAR WHICH HAS BEGUN TO SET OR WHICH HAS BEEN MIXED FOR A PERIOD OF MORE THAN 1 HOUR SHALL NOT BE USED.

7. SANDS FOR MORTAR - SHALL BE WASHED SAND, COMPLYING WITH BSEN 13139 AND PD 6682-3.

8. CEMENT (FOR INSITU CONCRETE AND MORTAR) - SHALL BE SULPHATE RESISTING PORTLAND CEMENT (SRPC) COMPLYING WITH BS 4027. CEMENT (FOR PRECAST CONCRETE PIPES OR MANHOLES) - SHALL BE A COMBINATION OF CEMENT CONFORMING TO BS 12 AND G.G.B.S OR P.F.A. OR CEMENT CONFORMING TO BS 4027 ALONE TO MEET UP TO AND INCLUDING DESIGN SULPHATE CLASS DS-3 AS DEFINED IN BRE SPECIAL DIGEST 1, 2001.

9. WATER FOR USE WITH CEMENT SHALL BE OF POTABLE QUALITY.

10. PRECAST CONCRETE MANHOLE COMPONENTS - SHALL COMPLY WITH THE RELEVANT PROVISIONS OF BSEN 1917 AND BS 5911. UNITS WHICH BED INTO BASES SHALL BE MANUFACTURED SO THAT IMPOSED VERTICAL LOADS ARE TRANSMITTED DIRECTLY VIA THE FULL WALL THICKNESS OF THE UNIT. FOR JOINTS BETWEEN UNITS AND THE UNDERSIDE OF SLABS, JOINT PROFILES SHALL BE CAPABLE OF WITHSTANDING APPLIED LOADINGS FROM SUCH SLABS, AND SPIGOT-ENDED SECTIONS SHALL ONLY BE USED WHERE THE SOFFIT OF THE SLAB IS RECESSED TO RECEIVED THEM.

11. IN SITU CONCRETE - STANDARD CONCRETE MIX GEN3 IN ACCORDANCE WITH BS 8500 AND BS EN 206-1 SHALL BE USED WITH A 20mm NOMINAL MAXIMUM SIZE OF AGGREGATE AND A CLASS S2 (70mm) SLUMP. ADMIXTURES (INCLUDING CALCIUM CHLORIDE AND PIGMENTS) SHALL NOT BE USED IN THE PRODUCTION OF CONCRETE. COMPRESSIVE STRENGTH TESTING SHALL NOT BE USED TO JUDGE THE COMPLIANCE OF A CONCRETE, BUT WHERE REQUIRED THE CONTRACTOR SHALL PROVIDE EVIDENCE OF THE BATCH MASSES USED TO PRODUCE ANY CONCRETE. NB STANDARDISED PRESCRIBED CONCRETE PRODUCED USING SULFATE-RESISTING PORTLAND CEMENT IS NOT INTENDED TO PRODUCE SULFATE-RESISTING CONCRETE. WHERE THE DESIGN SULPHATE CLASS IS HIGHER THAN DESIGN CHEMICAL CLASS DS-2, IN-SITU (AND PRECAST CONCRETE, WHERE APPLICABLE) SHALL BE AS DESIGNATED ON THE CONTRACT SPECIFIC DRAINAGE LAYOUT DRAWING, MANHOLE SCHEDULE OR SPECIFICATION.

12. AGGREGATES FOR CONCRETE - SHALL COMPLY WITH THE RELEVANT PROVISIONS OF BSEN 12620 AND PD 6682.

13. ALL ADOPTABLE WORKS SHALL BE CARRIED OUT IN ACCORDANCE WITH SEWERS FOR ADOPTION 7TH EDITION.

14. ALL THE ABOVE REQUIREMENTS SHALL APPLY UNLESS OTHERWISE STATED IN THE DRAINAGE LAYOUT DRAWING, MANHOLE SCHEDULE OR SPECIFICATION. IN THE EVENT OF A CONTRADICTION THE CONTRACT SPECIFIC DOCUMENTS SHALL BE DEEMED TO PREVAIL.

15. BENDS OF UP TO 45° MAY BE USED ON THE INLETS AND OUTLETS OF THE CHAMBER TO FACILITATE CONNECTIONS AND CHANGES IN DIRECTION.

16. ALL UNUSED CONNECTIONS TO THE INSPECTION CHAMBER BASE SHALL BE CAPPED OFF.

CDM REGULATION: NO DRAWING OR OTHER DESIGN INFORMATION SHOULD BE READ WITHOUT REFERENCE TO THE HEALTH AND SAFETY PLAN.

THIS DRAWING IS TO BE READ IN CONJUNCTION WITH ALL RELEVANT ARCHITECTS, ENGINEERS AND SPECIALIST SUB-CONTRACTORS DRAWINGS AND SPECIFICATIONS AND EMPLOYER'S SPECIFICATION. ANY DISCREPANCIES BETWEEN THESE DRAWINGS ARE TO BE REPORTED IMMEDIATELY.

SITE IS TO VERIFY ALL DIMENSIONS PRIOR TO CONSTRUCTION.
THIS DRAWING IS NOT TO BE SCALED IN HARD FORMAT AND/OR ELECTRONIC FORMAT.

Rev	Date	Description	Drn	Chk'd
P1	08/07/21	PRELIMINARY ISSUE	GHB	TS

Revisions

PAUL OWEN ASSOCIATES
CONSULTING ENGINEERS - TECHNICAL ADVISERS
Studio D128, 62 Triton Road, West Dulwich,
London SE21 8DE
t: 020 3176 7726 www.paulowen.co.uk

Project Name: NEWPORT ROAD

Title: INSPECTION CHAMBER DETAIL

Original drawing sheet is A3

Drawn by	Drawn Date	Checked by	Scale
GHB	08/07/21	TS	NTS

Drawing Number: 221038/102

Revision: P1

DIMENSION `Y'

IN ROCK, CONCRETE OR MIXED SOILS CONTAINING ROCK BANDS, BOULDERS, LARGE FLINTS OR STONES OR OTHER IRREGULAR HARD SPOTS THAT RESULT IN AN UNEVEN TRENCH BOTTOM, Y = 1/4 BC OR 150mm WHICH EVER IS THE GREATER, BUT NOT LESS THAN 50mm UNDER COLLARS.

IN SOILS THAT PERMIT AN EVEN TRENCH BOTTOM TO BE EXCAVATED Y = 1/6 BC OR 150mm WHICH EVER IS THE GREATER BUT NOT LESS THAN 50mm UNDER COLLARS.

GRANULAR MATERIAL

PIPE DIA.	GRADED AGGREGATE	SINGLE SIZE AGGREGATE
NOT EXCEEDING 140mm	-	10mm
EXCEEDING 140mm BUT NOT EXCEEDING 400mm	20 TO 5mm OR 14 TO 5mm	10, 14, 20mm
EXCEEDING 400mm	14 TO 5mm, 20 TO 5mm OR 40 TO 5mm	10, 14, 20 OR 40mm

THE GRANULAR MATERIAL USED FOR PIPE BEDDING AND SURROUND SHALL COMPLY WITH WIS 4-08-02

NOTES

1. ALL DIMENSIONS ARE IN MILLIMETERS UNLESS SHOWN OTHERWISE.
2. WIDTH OF TRENCHES SHALL BE BC+600mm (MAX.) OR BC+300mm (MIN.).
3. FOR PIPES EXCEEDING 600mm DIA. REFER TO THE ENGINEER.
4. WIDTH OF DUAL TRENCHES SHALL BE 2BC + 1050 + 300 EXCEPT WHERE LAYOUT DICTATES A WIDER SPACING TO ACCOMMODATE MANHOLES AND/OR ADOPTING AUTHORITY REQUIREMENTS.
5. ALL PIPES AND CULVERTS SHALL HAVE FLEXIBLE WATERTIGHT JOINTS.
6. CONCRETE SURROUND MAY EXTEND TO THE SIDES OF THE TRENCH, OR BE OF A MINIMUM WIDTH. SELECTED FILL MATERIAL IS TO BE USED TO FILL ANY VOIDS SO FORMED.
7. TYPE S BEDDING TO BE USED WHERE SELECTED OR ACCEPTABLE FILL MATERIAL IS NOT AVAILABLE.
8. THE BEDDINGS MAY BE MODIFIED FOR CERTAIN SUBSOIL CONDITIONS AT THE ENGINEERS DISCRETION.
9. IN WET OR SOFT GROUND SEEK GUIDANCE FROM THE ENGINEER.
10. EXCAVATION, BACKFILLING AND REINSTATEMENT IN PUBLIC HIGHWAYS SHALL BE CARRIED OUT IN ACCORDANCE WITH THE REQUIREMENTS OF THE HIGHWAY AUTHORITY'S REQUIREMENTS. SUPPLEMENTARY GUIDANCE IS GIVEN IN THE HAUC GUIDELINES.
11. THE CONTRACTOR SHALL BE RESPONSIBLE FOR PROVIDING ADDITIONAL PROTECTION IN AREAS SUBJECTED TO LOADS FROM SITE TRAFFIC.
12. REFER ALSO TO BSEN 752.
13. PIPE PROTECTION DETAILS HAVE BEEN BASED ON RIGID PIPEWORK. WHERE FLEXIBLE PIPEWORK IS TO BE USED CLASS S BEDDING IS TO BE USED FOR DEPTHS GREATER THAN 900mm AND THE RECOMMENDATIONS OF THE PIPE MANUFACTURER SHALL BE FOLLOWED FOR SHALLOWER DEPTHS.

(PIPE DIA.)	Bd (TRENCH WIDTH)	(PIPE DIA.)	Bd (TRENCH WIDTH)
100mm	600mm	400mm	1100mm
150mm	600mm	450mm	1200mm
225mm	700mm	500mm	1200mm
300mm	800mm	600mm	1400mm
375mm	1100mm		

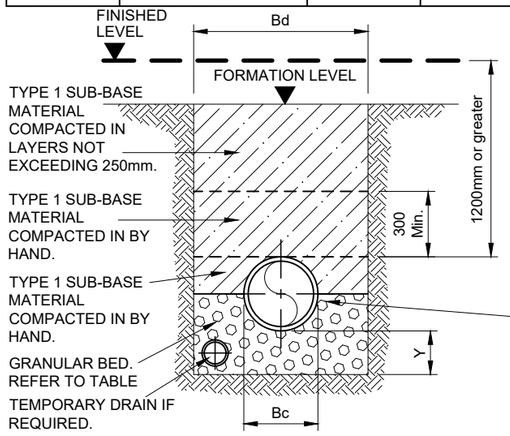

CLASS B GRANULAR BED

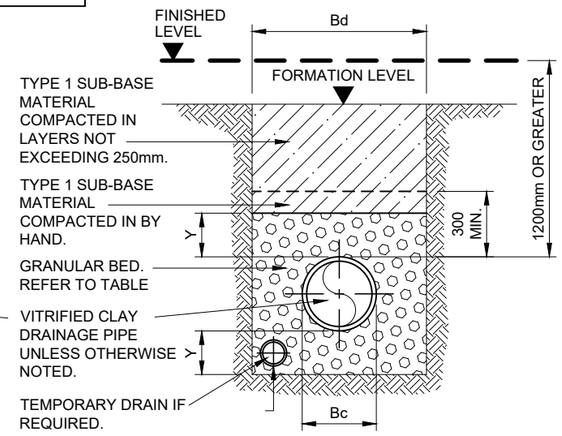

CLASS S GRANULAR SURROUND

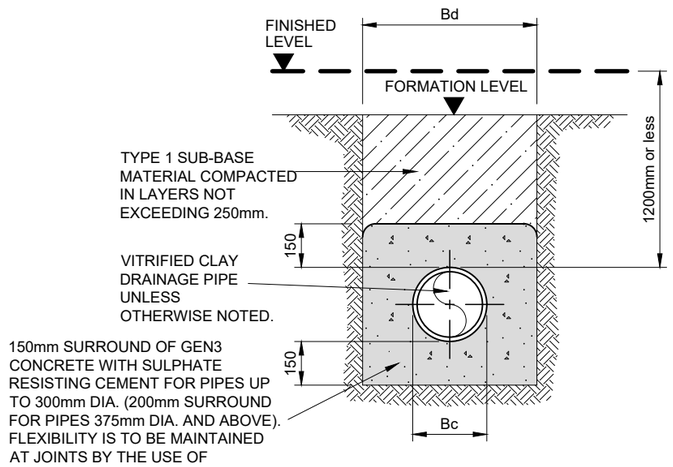

CONCRETE BED & SURROUND (C.B.S.)

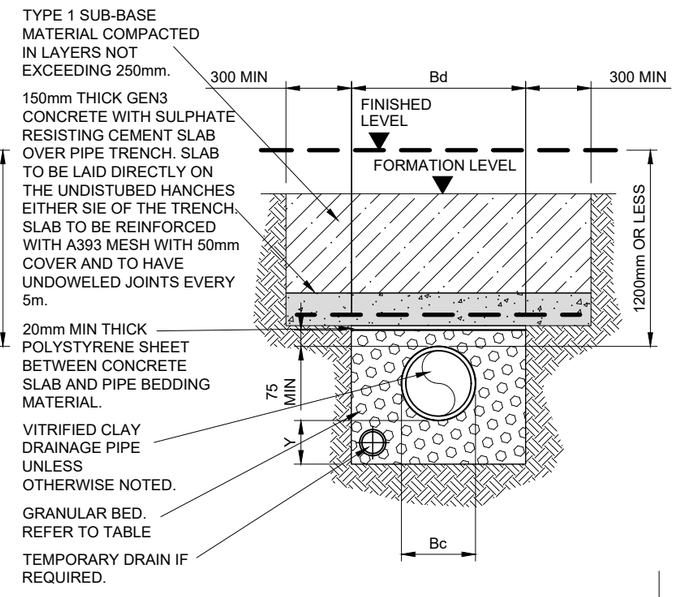

SHALLOW TRENCH DETAIL

ALTERNATIVE TO CONCRETE BED AND SURROUND.

CDM REGULATION: NO DRAWING OR OTHER DESIGN INFORMATION SHOULD BE READ WITHOUT REFERENCE TO THE HEALTH AND SAFETY PLAN.

THIS DRAWING IS TO BE READ IN CONJUNCTION WITH ALL RELEVANT ARCHITECTS, ENGINEERS AND SPECIALIST SUB-CONTRACTORS DRAWINGS AND SPECIFICATIONS AND EMPLOYER'S SPECIFICATION. ANY DISCREPANCIES BETWEEN THESE DRAWINGS ARE TO BE REPORTED IMMEDIATELY.

SITE IS TO VERIFY ALL DIMENSIONS PRIOR TO CONSTRUCTION.
THIS DRAWING IS NOT TO BE SCALED IN HARD FORMAT AND/OR ELECTRONIC FORMAT.

Rev	Date	Description	Drn	Chk'd
P1	08/07/21	PRELIMINARY ISSUE	GHB	TS

Revisions

PAULOWEN ASSOCIATES
CONSULTING ENGINEERS - TECHNICAL ADVISERS
Studio D128, 62 Triton Road, West Dulwich, London SE21 8DE
t: 020 3176 7726 www.paulowen.co.uk

Project Name: NEWPORT ROAD

Title: PIPE PROTECTION DETAILS

Original drawing sheet is A3

Drawn by	Drawn Date	Checked by	Scale
GHB	08/07/21	TS	NTS

Drawing Number: 221038/103

Revision: P1

CDM REGULATION: NO DRAWING OR OTHER DESIGN INFORMATION SHOULD BE READ WITHOUT REFERENCE TO THE HEALTH AND SAFETY PLAN.

THIS DRAWING IS TO BE READ IN CONJUNCTION WITH ALL RELEVANT ARCHITECTS, ENGINEERS AND SPECIALIST SUB-CONTRACTORS DRAWINGS AND SPECIFICATIONS AND EMPLOYER'S SPECIFICATION. ANY DISCREPANCIES BETWEEN THESE DRAWINGS ARE TO BE REPORTED IMMEDIATELY.

SITE IS TO VERIFY ALL DIMENSIONS PRIOR TO CONSTRUCTION.
THIS DRAWING IS NOT TO BE SCALED IN HARD FORMAT AND/OR ELECTRONIC FORMAT.

GULLY POTS
GULLY POTS SHALL BE AS FOLLOWS:

CONCRETE TO B.S 5911
VITRIFIED CLAYWARE TO BSEN 295 (TO ENGINEERS APPROVAL)
POLYPROPYLENE (TO ENGINEERS APPROVAL)
ALKATHENE (TO ENGINEERS APPROVAL)

CONNECTIONS TO CARRIER DRAINS DRAINS SHALL BE BY MEANS OF "Y" JUNCTIONS OR SADDLES AS APPROPRIATE.

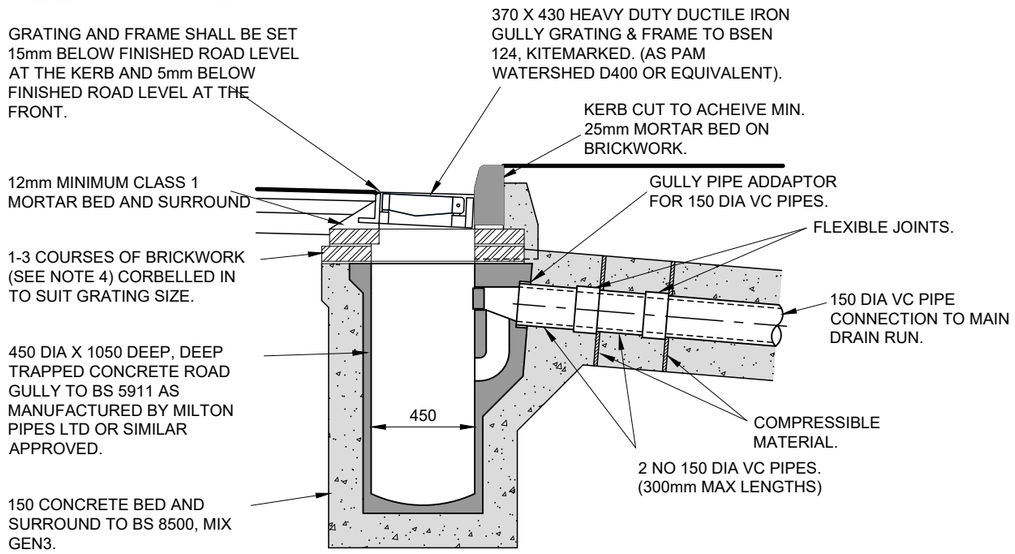

TYPICAL TRAPPED CONCRETE ROAD GULLY

NOTES

1. FOR DATED REFERENCES, SUBSEQUENT AMENDMENTS TO, OR REVISIONS OF, ANY OF THESE PUBLICATION DO NOT APPLY. FOR UNDATED REFERENCES, THE LASTEST EDITION OF THE PUBLICATION REFERRED TO APPLIES.

2. THIS DRAWING IS TO BE READ IN CONJUNCTION WITH ALL OTHER RELEVANT DRAWINGS AND THE SPECIFICATION.

3. DO NOT SCALE FROM THIS DRAWING, USE FIGURED DIMENSIONS ONLY. ALL DIMENSIONS ARE IN MILLIMETRES.

4. BRICKS - SHALL BE SOLID CLASS B ENGINEERING COMPLYING WITH THE RELEVANT PROVISIONS OF BS 3921. ALL BRICKS SHALL BE FROST RESISTANT CATEGORY F.

5. MORTAR - SHALL BE MIXED ONLY AS AND WHEN REQUIRED, IN THE PROPORTION 1:3 CEMENT:SAND BY VOLUME. ALL MORTAR SHALL BE CONVEYED FRESH TO THE WORKS AS REQUIRED FOR USE. MORTAR WHICH HAS BEGUN TO SET OR WHICH HAS BEEN MIXED FOR A PERIOD OF MORE THAN 1 HOUR SHALL NOT BE USED.

6. SANDS FOR MORTAR - SHALL BE WASHED SAND, COMPLYING WITH BSEN 13139 AND PD6682-3.

7. CEMENT (FOR INSITU CONCRETE AND MORTAR) - SHALL BE SULPHATE RESISTING PORTLAND CEMENT (SRPC) COMPLYING WITH BS 4027.

   CEMENT (FOR PRECAST CONCRETE GULLIES) - SHALL BE A COMBINATION OF CEMENT CONFORMING TO BS 12 AND G.G.B.S OR P.F.A. OR CEMENT CONFORMING TO BS 4027 ALONE TO MEET UP TO AND INCLUDING DESIGN SULPHATE CLASS DS-3 AS DEFINED IN BRE SPECIAL DIGEST 1, 2001.

8. WATER FOR USE WITH CEMENT - SHALL BE OF POTABLE QUALITY.

9. IN SITU CONCRETE - STANDARD CONCRETE MIX GEN 3 IN ACCORDANCE WITH BS 8500 AND BS EN 206-1 SHALL BE USED WITH A 20mm NOMINAL MAXIMUM SIZE OF AGGREGATE AND A CLASS S2 (70mm) SLUMP. ADMIXTURES (INCLUDING CALCIUM CHLORIDE AND PIGMENTS) SHALL NOT BE USED IN THE PRODUCTION OF CONCRETE. COMPRESSIVE STRENGTH TESTING SHALL NOT BE USED TO JUDGE THE COMPLIANCE OF A CONCRETE, BUT WHERE REQUIRED THE CONTRACTOR SHALL PROVIDE EVIDENCE OF THE BATCH MASSES USED TO PRODUCE ANY CONCRETE.

   NB STANDARDISED PRESCRIBED CONCRETE PRODUCED USING SULFATE-RESISTING PORTLAND CEMENT IS NOT INTENDED TO PRODUCE SULFATE-RESISTING CONCRETE. WHERE THE DESIGN SULPHATE CLASS IS HIGHER THAN DESIGN CHEMICAL CLASS DS-2, IN-SITU (AND PRECAST CONCRETE, WHERE APPLICABLE) SHALL BE AS DESIGNATED ON THE CONTRACT SPECIFIC DRAINAGE LAYOUT DRAWING, MANHOLE SCHEDULE OR SPECIFICATION.

10. AGGREGATES FOR CONCRETE - SHALL COMPLY WITH THE RELEVANT PROVISIONS OF BSEN 12620 AND PD 6682.

11. ALL THE ABOVE REQUIREMENTS SHALL APPLY UNLESS OTHERWISE STATED IN THE DRAINAGE LAYOUT DRAWING, MANHOLE SCHEDULE OR SPECIFICATION. IN THE EVENT OF A CONTRADICTION THE CONTRACT SPECIFIC DOCUMENTS SHALL BE DEEMED TO PREVAIL.

Rev	Date	Description	Drn	Chk'd
P1	08/07/21	PRELIMINARY ISSUE	GHB	TS

Revisions

PAUL OWEN ASSOCIATES
CONSULTING ENGINEERS - TECHNICAL ADVISERS
Studio D128, 62 Triton Road, West Dulwich, London SE21 8DE
t: 020 3176 7726 www.paulowen.co.uk

Project Name: NEWPORT ROAD

Title: ROAD GULLY DETAILS

Original drawing sheet is A3

Drawn by	Drawn Date	Checked by	Scale
GHB	08/07/21	TS	NTS

Drawing Number: 221038/104

Revision: P1

CDM REGULATION: NO DRAWING OR OTHER DESIGN INFORMATION SHOULD BE READ WITHOUT REFERENCE TO THE HEALTH AND SAFETY PLAN.

THIS DRAWING IS TO BE READ IN CONJUNCTION WITH ALL RELEVANT ARCHITECTS, ENGINEERS AND SPECIALIST SUB-CONTRACTORS DRAWINGS AND SPECIFICATIONS AND EMPLOYER'S SPECIFICATION. ANY DISCREPANCIES BETWEEN THESE DRAWINGS ARE TO BE REPORTED IMMEDIATELY.

SITE IS TO VERIFY ALL DIMENSIONS PRIOR TO CONSTRUCTION.
THIS DRAWING IS NOT TO BE SCALED IN HARD FORMAT AND/OR ELECTRONIC FORMAT.

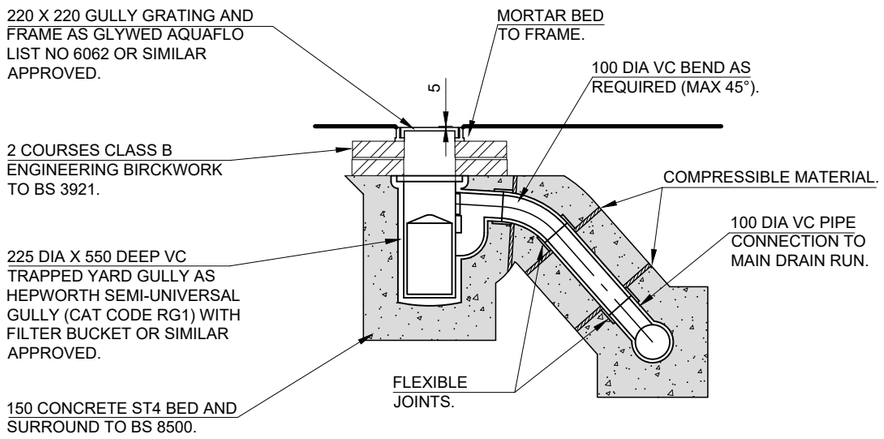

TYPICAL TRAPPED AND RODDABLE YARD GULLY DETAIL

NOTES

1. FOR DATED REFERENCES, SUBSEQUENT AMENDMENTS TO, OR REVISIONS OF, ANY OF THESE PUBLICATION DO NOT APPLY. FOR UNDATED REFERENCES, THE LASTEST EDITION OF THE PUBLICATION REFERRED TO APPLIES.

2. THIS DRAWING IS TO BE READ IN CONJUNCTION WITH ALL OTHER RELEVANT DRAWINGS AND THE SPECIFICATION.

3. DO NOT SCALE FROM THIS DRAWING, USE FIGURED DIMENSIONS ONLY. ALL DIMENSIONS ARE IN MILLIMETRES.

4. BRICKS - SHALL BE SOLID CLASS B ENGINEERING COMPLYING WITH THE RELEVANT PROVISIONS OF BS 3921. ALL BRICKS SHALL BE FROST RESISTANT CATEGORY F.

5. MORTAR - SHALL BE MIXED ONLY AS AND WHEN REQUIRED, IN THE PROPORTION 1:3 CEMENT:SAND BY VOLUME. ALL MORTAR SHALL BE CONVEYED FRESH TO THE WORKS AS REQUIRED FOR USE. MORTAR WHICH HAS BEGUN TO SET OR WHICH HAS BEEN MIXED FOR A PERIOD OF MORE THAN 1 HOUR SHALL NOT BE USED.

6. SANDS FOR MORTAR - SHALL BE WASHED SAND, COMPLYING WITH BSEN 13139 AND PD6682-3.

7. CEMENT (FOR INSITU CONCRETE AND MORTAR) - SHALL BE SULPHATE RESISTING PORTLAND CEMENT (SRPC) COMPLYING WITH BS 4027.

   CEMENT (FOR PRECAST CONCRETE GULLIES) - SHALL BE A COMBINATION OF CEMENT CONFORMING TO BS 12 AND G.G.B.S OR P.F.A. OR CEMENT CONFORMING TO BS 4027 ALONE TO MEET UP TO AND INCLUDING DESIGN SULPHATE CLASS DS-3 AS DEFINED IN BRE SPECIAL DIGEST 1, 2001.

8. WATER FOR USE WITH CEMENT - SHALL BE OF POTABLE QUALITY.

9. IN SITU CONCRETE - STANDARD CONCRETE MIX GEN 3 IN ACCORDANCE WITH BS 8500 AND BS EN 206-1 SHALL BE USED WITH A 20mm NOMINAL MAXIMUM SIZE OF AGGREGATE AND A CLASS S2 (70mm) SLUMP. ADMIXTURES (INCLUDING CALCIUM CHLORIDE AND PIGMENTS) SHALL NOT BE USED IN THE PRODUCTION OF CONCRETE. COMPRESSIVE STRENGTH TESTING SHALL NOT BE USED TO JUDGE THE COMPLIANCE OF A CONCRETE, BUT WHERE REQUIRED THE CONTRACTOR SHALL PROVIDE EVIDENCE OF THE BATCH MASSES USED TO PRODUCE ANY CONCRETE.

   NB STANDARDISED PRESCRIBED CONCRETE PRODUCED USING SULFATE-RESISTING PORTLAND CEMENT IS NOT INTENDED TO PRODUCE SULFATE-RESISTING CONCRETE. WHERE THE DESIGN SULPHATE CLASS IS HIGHER THAN DESIGN CHEMICAL CLASS DS-2, IN-SITU (AND PRECAST CONCRETE, WHERE APPLICABLE) SHALL BE AS DESIGNATED ON THE CONTRACT SPECIFIC DRAINAGE LAYOUT DRAWING, MANHOLE SCHEDULE OR SPECIFICATION.

10. AGGREGATES FOR CONCRETE - SHALL COMPLY WITH THE RELEVANT PROVISIONS OF BSEN 12620 AND PD 6682.

11. ALL THE ABOVE REQUIREMENTS SHALL APPLY UNLESS OTHERWISE STATED IN THE DRAINAGE LAYOUT DRAWING, MANHOLE SCHEDULE OR SPECIFICATION. IN THE EVENT OF A CONTRADICTION THE CONTRACT SPECIFIC DOCUMENTS SHALL BE DEEMED TO PREVAIL.

Rev	Date	Description	Drn	Chk'd
P1	08/07/21	PRELIMINARY ISSUE	GHB	TS

Revisions

PAUL OWEN ASSOCIATES
CONSULTING ENGINEERS - TECHNICAL ADVISERS
Studio D128, 62 Triton Road, West Dulwich, London SE21 8DE
t: 020 3176 7726 www.paulowen.co.uk

Project Name: NEWPORT ROAD

Title: YARD GULLY DETAILS

Original drawing sheet is A3

Drawn by	Drawn Date	Checked by	Scale
GHB	08/07/21	TS	NTS

Drawing Number: 221038/105

Revision: P1

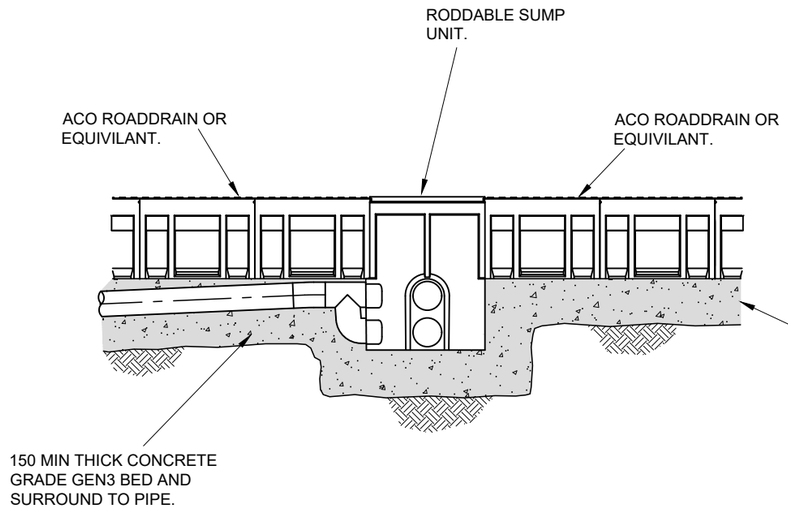

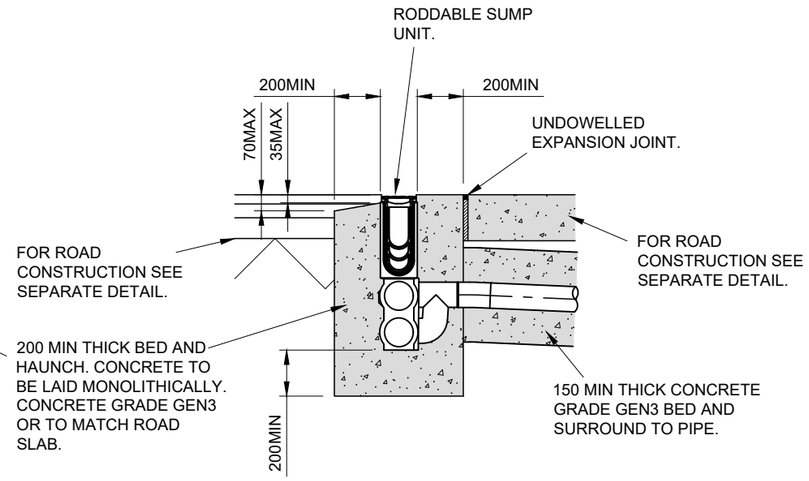

CDM REGULATION: NO DRAWING OR OTHER DESIGN INFORMATION SHOULD BE READ WITHOUT REFERENCE TO THE HEALTH AND SAFETY PLAN.

THIS DRAWING IS TO BE READ IN CONJUNCTION WITH ALL RELEVANT ARCHITECTS, ENGINEERS AND SPECIALIST SUB-CONTRACTORS DRAWINGS AND SPECIFICATIONS AND EMPLOYER'S SPECIFICATION. ANY DISCREPANCIES BETWEEN THESE DRAWINGS ARE TO BE REPORTED IMMEDIATELY.

SITE IS TO VERIFY ALL DIMENSIONS PRIOR TO CONSTRUCTION.
THIS DRAWING IS NOT TO BE SCALED IN HARD FORMAT AND/OR ELECTRONIC FORMAT.

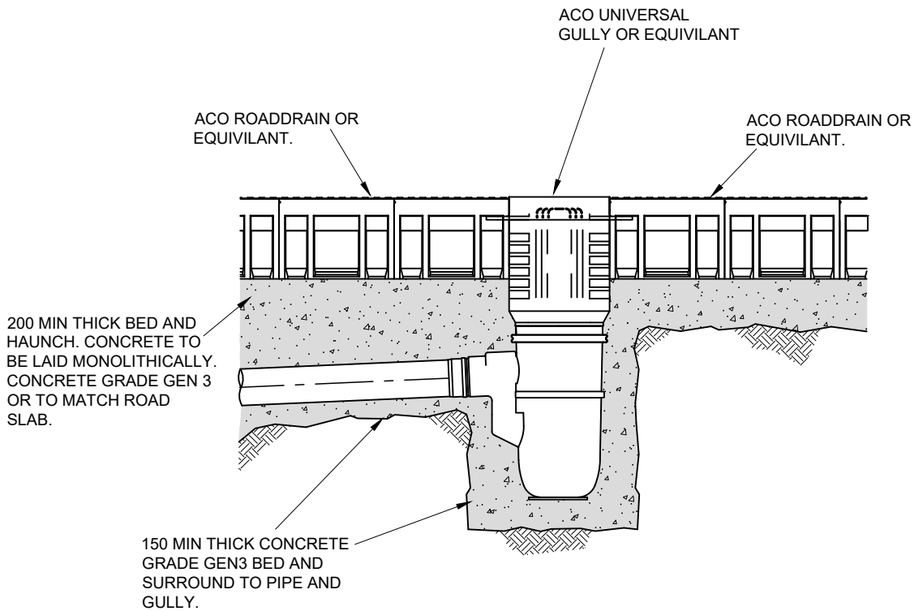

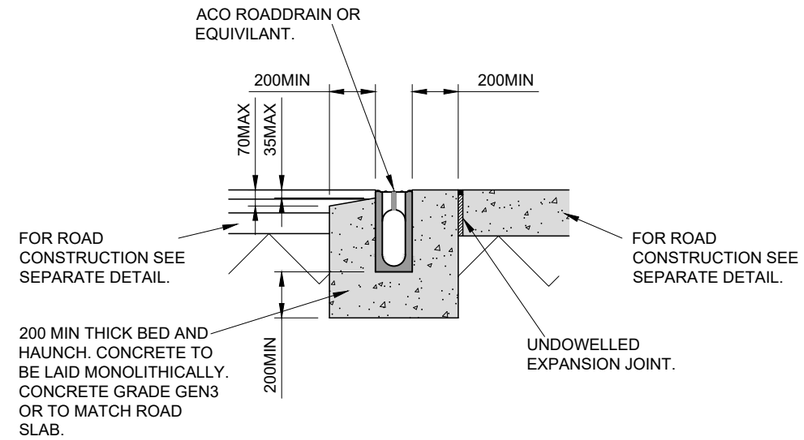

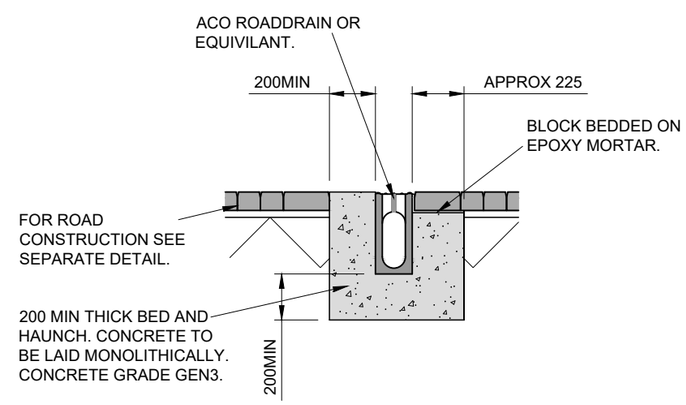

NOTES

1. CONCRETE SURROUND TO ROADDRAINS TO HAVE TRANSVERS JOINT TO MATCH THE ROAD SLAB JOINTS.
2. THE ROADDRAINS SHALL BE INSTALLED STRICTLY IN ACCORDANCE WITH THE MANUFACTURER RECOMENDATIONS.
3. CONCRETE SURROUND AND PROTECTION TO THE KERB DRAINS SHALL MATCH IN SPECIFICATION THE CONCRETE USED FOR THE ROAD SLABS.

Rev	Date	Description	Drn	Chk'd
P1	08/07/21	PRELIMINARY ISSUE	GHB	TS

Revisions

PAULOWEN ASSOCIATES
CONSULTING ENGINEERS - TECHNICAL ADVISERS
Studio D128, 62 Triton Road, West Dulwich, London SE21 8DE
t: 020 3176 7726 www.paulowen.co.uk

Project Name: NEWPORT ROAD

Title: TYPICAL DRAINAGE CHANNEL DETAILS

Original drawing sheet is A3

Drawn by	Drawn Date	Checked by	Scale
GHB	08/07/21	TS	NTS

Drawing Number: 221038/106

Revision: P1

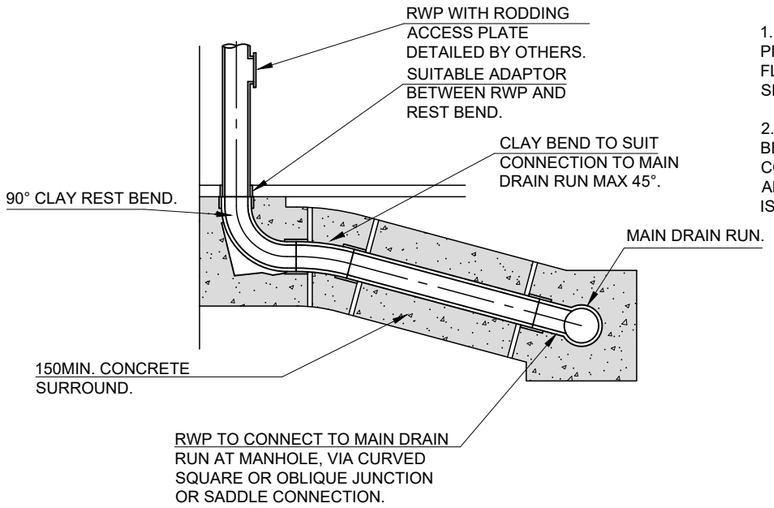

NOTE

1. FOR DETAILS OF PIPE PROTECTION UNDER FLOOR SLAB SEE SEPARATE DETAIL.

2. MINIMUM DISTANCE BETWEEN LOWEST CONNECTION TO SOIL PIPE AND INVERT OF REST BEND IS 450mm

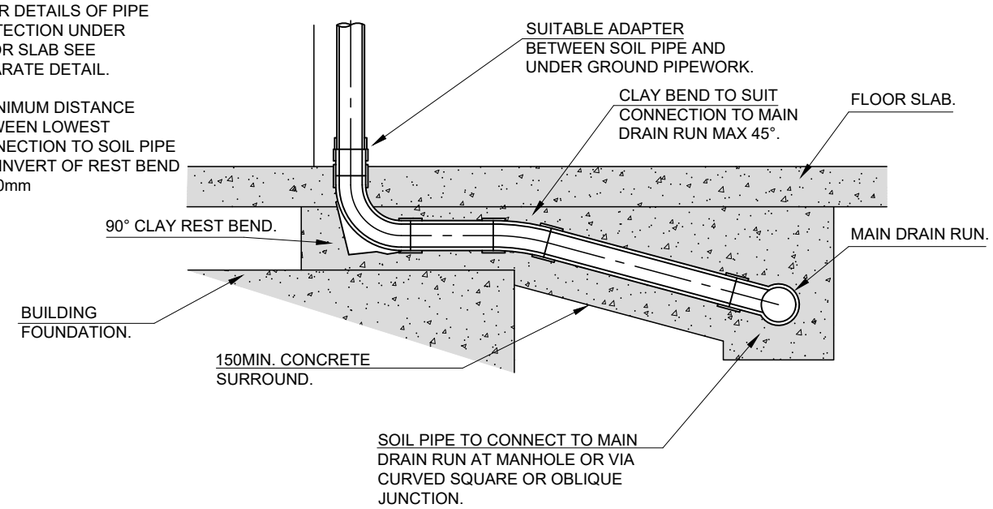

CDM REGULATION: NO DRAWING OR OTHER DESIGN INFORMATION SHOULD BE READ WITHOUT REFERENCE TO THE HEALTH AND SAFETY PLAN.

THIS DRAWING IS TO BE READ IN CONJUNCTION WITH ALL RELEVANT ARCHITECTS, ENGINEERS AND SPECIALIST SUB-CONTRACTORS DRAWINGS AND SPECIFICATIONS AND EMPLOYER'S SPECIFICATION. ANY DISCREPANCIES BETWEEN THESE DRAWINGS ARE TO BE REPORTED IMMEDIATELY.

SITE IS TO VERIFY ALL DIMENSIONS PRIOR TO CONSTRUCTION.
THIS DRAWING IS NOT TO BE SCALED IN HARD FORMAT AND/OR ELECTRONIC FORMAT.

TYPICAL DETAIL AT BASE OF RAIN WATER PIPE

TYPICAL DETAIL AT BASE OF SOIL PIPE

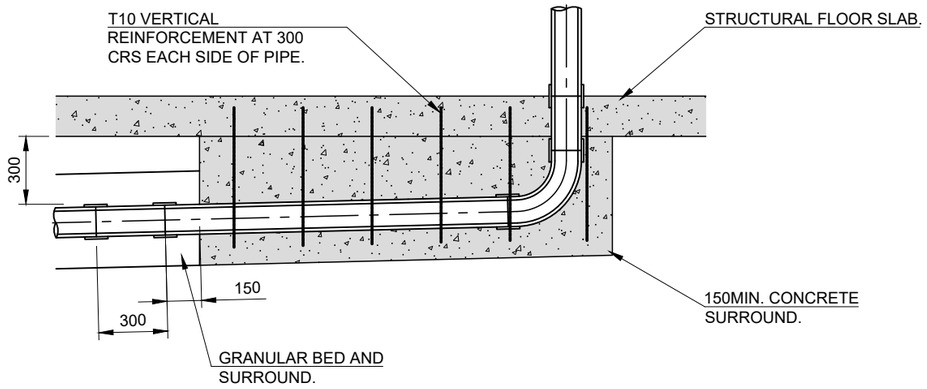

TYPICAL DETAIL OF PIPEWORK UNDER BUILDING SLAB

NOTES

1. FOR DATED REFERENCES, SUBSEQUENT AMENDMENTS TO, OR REVISIONS OF, ANY OF THESE PUBLICATION DO NOT APPLY. FOR UNDATED REFERENCES, THE LASTEST EDITION OF THE PUBLICATION REFERRED TO APPLIES.

2. THIS DRAWING IS TO BE READ IN CONJUNCTION WITH ALL OTHER RELEVANT DRAWINGS AND THE SPECIFICATION.

3. DO NOT SCALE FROM THIS DRAWING, USE FIGURED DIMENSIONS ONLY. ALL DIMENSIONS ARE IN MILLIMETRES.

4. CEMENT (FOR INSITU CONCRETE AND MORTAR) - SHALL BE SULPHATE RESISTING PORTLAND CEMENT (SRPC) COMPLYING WITH BS 4027.

   CEMENT (FOR PRECAST CONCRETE PIPES OR MANHOLES) - SHALL BE A COMBINATION OF CEMENT CONFORMING TO BS 12 AND G.G.B.S OR P.F.A. OR CEMENT CONFORMING TO BS 4027 ALONE TO MEET UP TO AND INCLUDING DESIGN SULPHATE CLASS DS-3 AS DEFINED IN BRE SPECIAL DIGEST 1, 2001.

5. WATER FOR USE WITH CEMENT - SHALL BE OF POTABLE QUALITY.

6. IN SITU CONCRETE - STANDARD CONCRETE MIX GEN3 IN ACCORDANCE WITH BS 8500 AND BS EN 206-1 SHALL BE USED WITH A 20mm NOMINAL MAXIMUM SIZE OF AGGREGATE AND A CLASS S2 (70mm) SLUMP. ADMIXTURES (INCLUDING CALCIUM CHLORIDE AND PIGMENTS) SHALL NOT BE USED IN THE PRODUCTION OF CONCRETE. COMPRESSIVE STRENGTH TESTING SHALL NOT BE USED TO JUDGE THE COMPLIANCE OF A CONCRETE, BUT WHERE REQUIRED THE CONTRACTOR SHALL PROVIDE EVIDENCE OF THE BATCH MASSES USED TO PRODUCE ANY CONCRETE.

   NB STANDARDISED PRESCRIBED CONCRETE PRODUCED USING SULFATE-RESISTING PORTLAND CEMENT IS NOT INTENDED TO PRODUCE SULFATE-RESISTING CONCRETE. WHERE THE DESIGN SULPHATE CLASS IS HIGHER THAN DESIGN CHEMICAL CLASS DS-2, IN-SITU (AND PRECAST CONCRETE, WHERE APPLICABLE) SHALL BE AS DESIGNATED ON THE CONTRACT SPECIFIC DRAINAGE LAYOUT DRAWING, MANHOLE SCHEDULE OR SPECIFICATION.

7. AGGREGATES FOR CONCRETE - SHALL COMPLY WITH THE RELEVANT PROVISIONS OF BSEN 12620 AND PD 6682.

Rev	Date	Description	Drn	Chk'd
P1	08/07/21	PRELIMINARY ISSUE	GHB	TS

Revisions

PAUL OWEN ASSOCIATES
CONSULTING ENGINEERS - TECHNICAL ADVISERS
Studio D128, 62 Triton Road, West Dulwich, London SE21 8DE
t: 020 3176 7726 www.paulowen.co.uk

Project Name: NEWPORT ROAD

Title: TYPICAL RWPAND SP DETAILS

Original drawing sheet is A3

Drawn by	Drawn Date	Checked by	Scale
GHB	08/07/21	TS	NTS

Drawing Number: 221038/107

Revision: P1

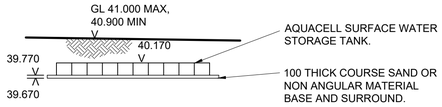

SECTION A-A

1:100

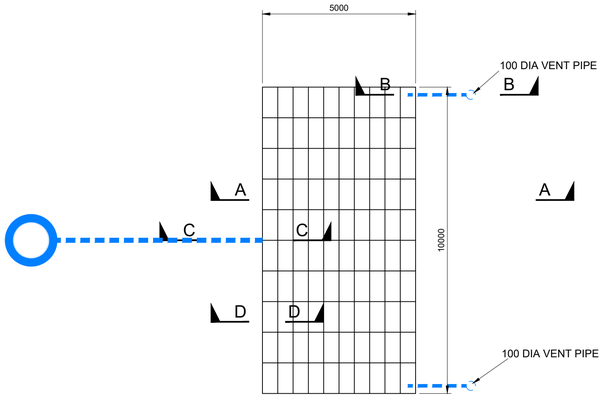

PLAN

1:100

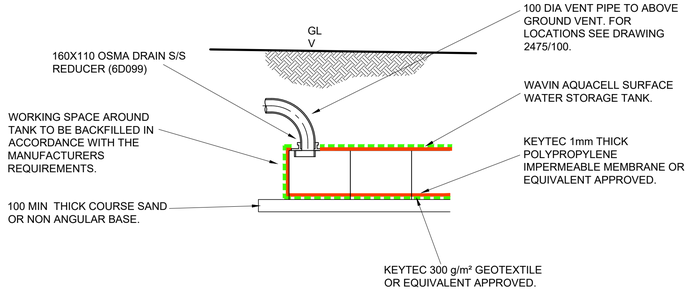

VENT PIPE CONNECTION DETAILS SECTION B-B

1:25

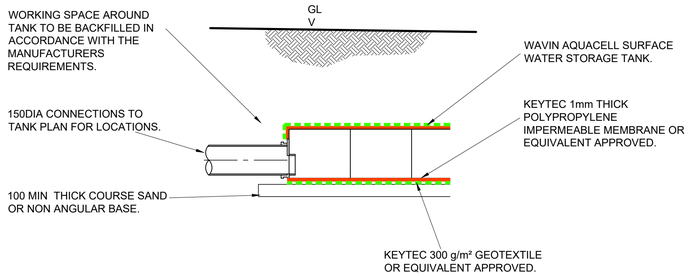

INLET/OUTLET PIPE DETAILS SECTION C-C

1:25

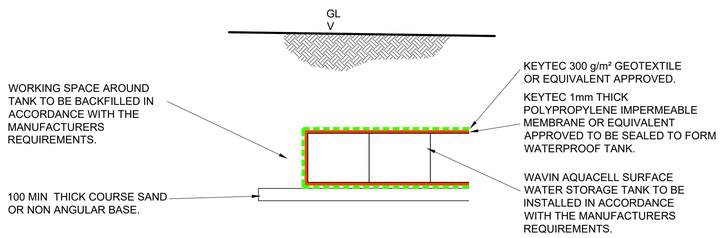

TANK CONSTRUCTION DETAILS SECTION D-D

1:25

CDM REGULATION: NO DRAWING OR OTHER DESIGN INFORMATION SHOULD BE READ WITHOUT REFERENCE TO THE HEALTH AND SAFETY PLAN.

THIS DRAWING IS TO BE READ IN CONJUNCTION WITH ALL RELEVANT ARCHITECTS, ENGINEERS AND SPECIALIST SUB-CONTRACTORS DRAWINGS AND SPECIFICATIONS AND EMPLOYER'S SPECIFICATION. ANY DISCREPANCIES BETWEEN THESE DRAWINGS ARE TO BE REPORTED IMMEDIATELY.

SITE IS TO VERIFY ALL DIMENSIONS PRIOR TO CONSTRUCTION. THIS DRAWING IS NOT TO BE SCALED IN HARD FORMAT AND/OR ELECTRONIC FORMAT.

Rev	Date	Description	Drn	Chk'd
P1	08/07/21	PRELIMINARY ISSUE	GHB	TS

Revisions

Drawing Originator

PAUL OWEN ASSOCIATES
CONSULTING ENGINEERS - TECHNICAL ADVISERS
Studio D128, 62 Triton Road, West Dulwich, London SE21 8DE
t: 020 3176 7726 www.paulowen.co.uk

Drawing Status

PRELIMINARY

Project Name

NEWPORT ROAD

Drawn by	Drawn Date	Checked by	Scale
GHB	08/07/21	TS	AS SHOWN

Title

Original drawing sheet is A1

ATTENUATION TANK DETAILS

Drawing Number: 221038/108

Revision: P1

Contaminated
Land
Solutions

Appendix C – EA Flood Map

Flood map for planning

Your reference	Location (easting/northing)	Created
Newport Road	**508773/181944**	**9 Jul 2021 11:09**

Your selected location is in flood zone 1, an area with a low probability of flooding.

This means:

- you don't need to do a flood risk assessment if your development is smaller than 1 hectare and not affected by other sources of flooding
- you may need to do a flood risk assessment if your development is larger than 1 hectare or affected by other sources of flooding or in an area with critical drainage problems

Notes

The flood map for planning shows river and sea flooding data only. It doesn't include other sources of flooding. It is for use in development planning and flood risk assessments.

This information relates to the selected location and is not specific to any property within it. The map is updated regularly and is correct at the time of printing.

The Open Government Licence sets out the terms and conditions for using government data.
https://www.nationalarchives.gov.uk/doc/open-government-licence/version/3/

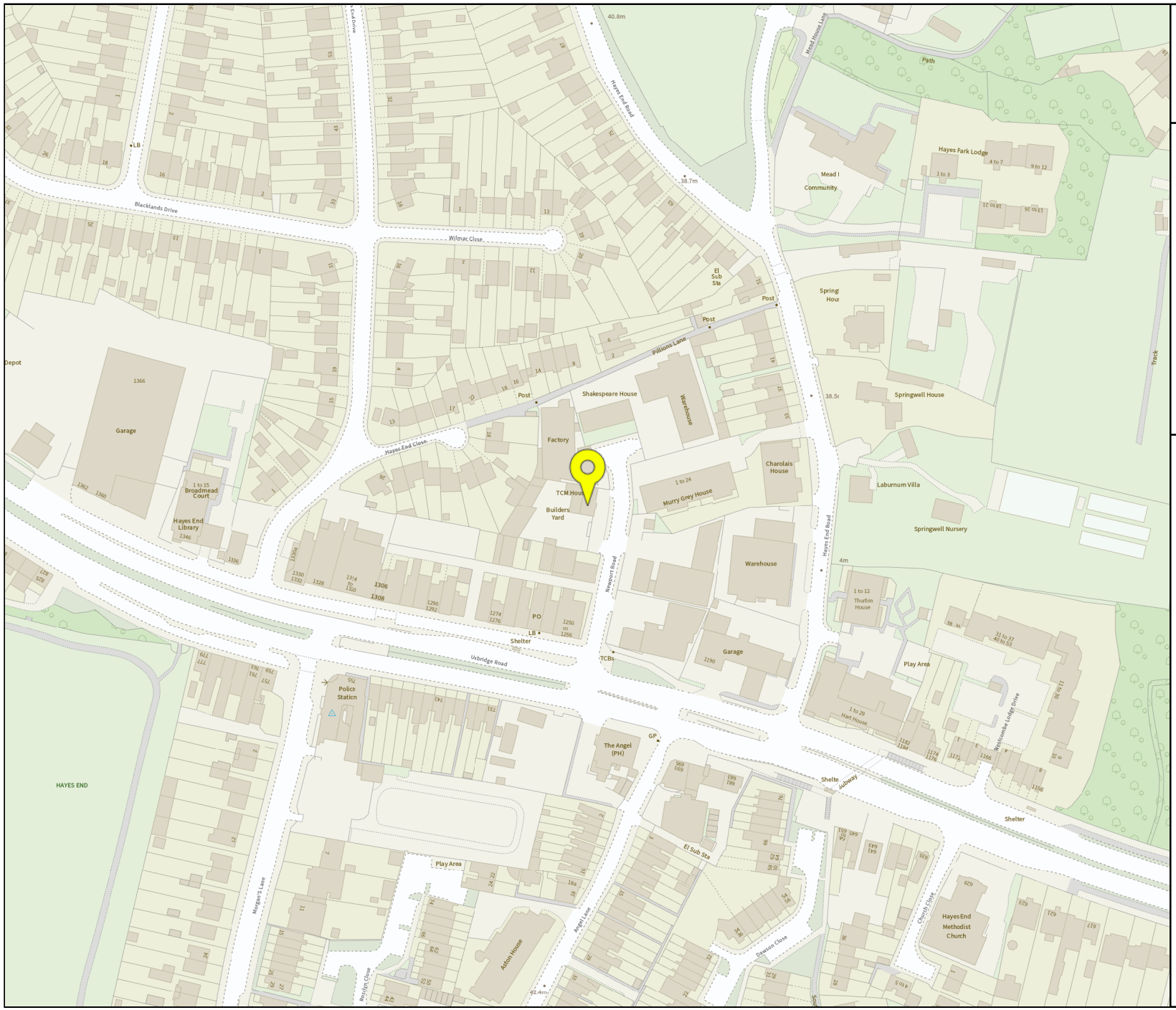

Environment Agency

Flood map for planning

Your reference
Newport Road

Location (easting/northing)
508773/181944

Scale
1:2500

Created
9 Jul 2021 11:09

- Selected point
- Flood zone 3
- Flood zone 3: areas benefitting from flood defences
- Flood zone 2
- Flood zone 1
- Flood defence
- Main river
- Flood storage area

0 20 40 60m

© Environment Agency copyright and / or database rights 2021. All rights reserved. © Crown Copyright and database right 2021. Ordnance Survey licence number 100024198.

Flood risk

Extent of flooding

Location

Enter a place or postcode

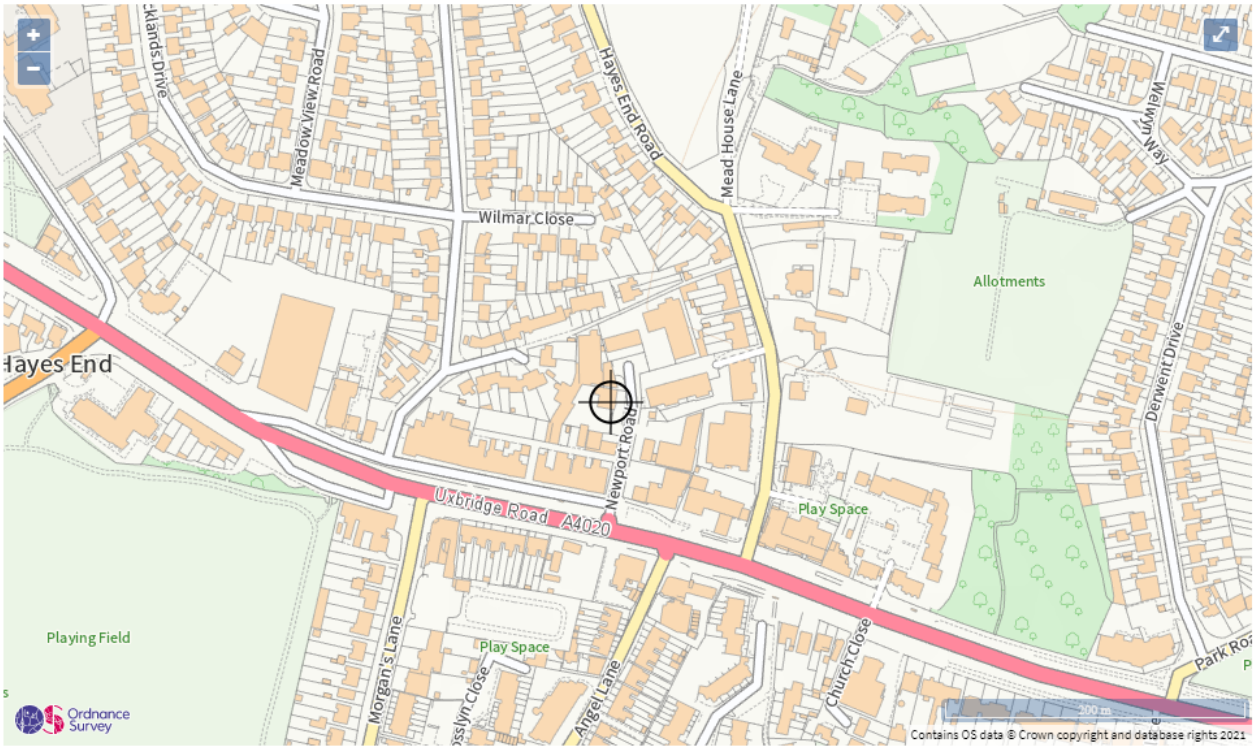

Extent of flooding from rivers or the sea

High Medium Low Very low Location you selected

Flood risk

Extent of flooding

Location

Enter a place or postcode

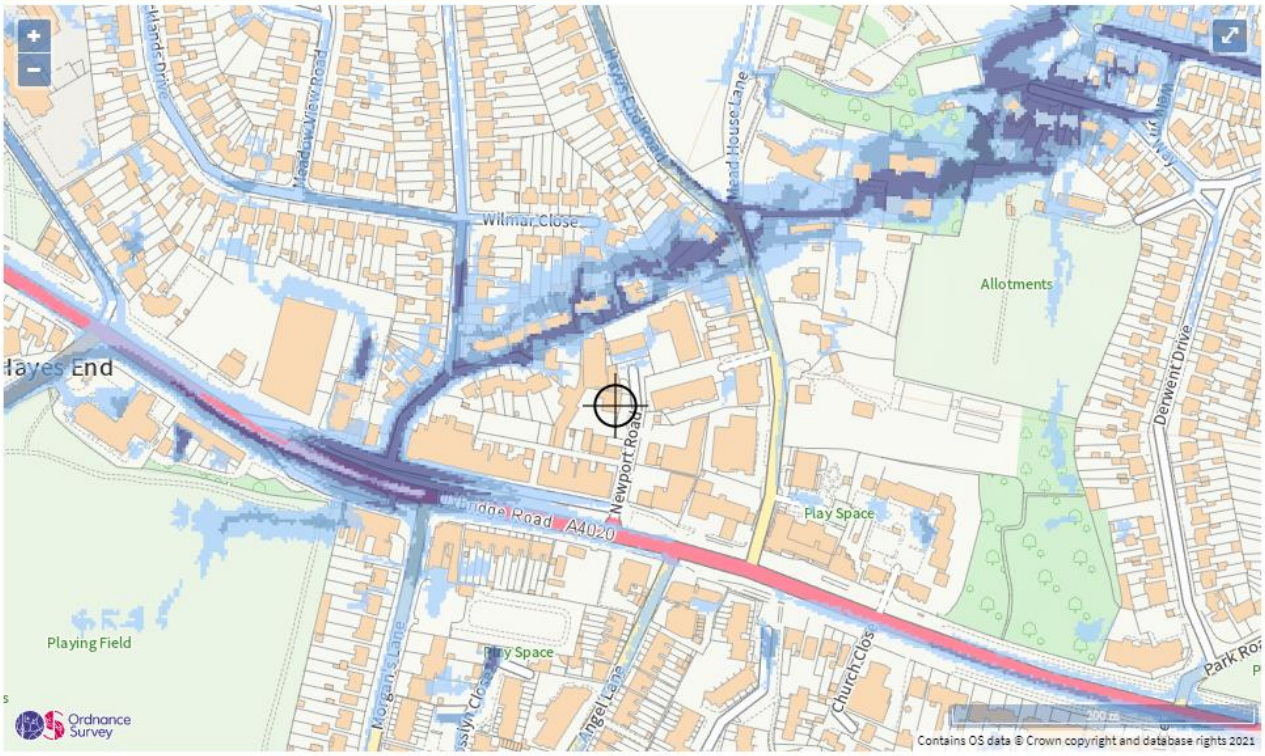

Extent of flooding from surface water

High Medium Low Very low Location you selected

Contaminated
Land
Solutions

Appendix D – Calculations

Summary of Results for 100 year Return Period (+40%)

Half Drain Time : 33 minutes

Storm Duration (mins)	Maximum Control (l/s)	Maximum Filtration (l/s)	Maximum Outflow (l/s)	Maximum Water Level (m OD)	Maximum Depth (m)	Maximum Volume (m³)	Status
15 Summer	5.3	0.0	5.3	40.0488	0.2787	13.2	O K
30 Summer	5.3	0.0	5.3	40.0743	0.3042	14.5	O K
60 Summer	5.3	0.0	5.3	40.0643	0.2942	14.0	O K
120 Summer	5.3	0.0	5.3	40.0163	0.2462	11.7	O K
180 Summer	5.3	0.0	5.3	39.9628	0.1927	9.2	O K
240 Summer	5.3	0.0	5.3	39.9118	0.1418	6.7	O K
360 Summer	5.3	0.0	5.3	39.8318	0.0618	2.9	O K
480 Summer	5.3	0.0	5.3	39.7853	0.0153	0.7	O K
600 Summer	5.1	0.0	5.1	39.7700	0.0000	0.0	O K
720 Summer	4.4	0.0	4.4	39.7700	0.0000	0.0	O K
960 Summer	3.5	0.0	3.5	39.7700	0.0000	0.0	O K
1440 Summer	2.5	0.0	2.5	39.7700	0.0000	0.0	O K
2160 Summer	1.8	0.0	1.8	39.7700	0.0000	0.0	O K
2880 Summer	1.4	0.0	1.4	39.7700	0.0000	0.0	O K
4320 Summer	1.0	0.0	1.0	39.7700	0.0000	0.0	O K
5760 Summer	0.8	0.0	0.8	39.7700	0.0000	0.0	O K
7200 Summer	0.7	0.0	0.7	39.7700	0.0000	0.0	O K
8640 Summer	0.6	0.0	0.6	39.7700	0.0000	0.0	O K
10080 Summer	0.5	0.0	0.5	39.7700	0.0000	0.0	O K
15 Winter	5.3	0.0	5.3	40.0938	0.3237	15.4	O K
30 Winter	5.4	0.0	5.4	40.1333	0.3632	17.3	O K
60 Winter	5.4	0.0	5.4	40.1153	0.3452	16.4	O K
120 Winter	5.3	0.0	5.3	40.0413	0.2712	12.9	O K
180 Winter	5.3	0.0	5.3	39.9588	0.1887	9.0	O K

Storm Duration (mins)	Rain (mm/hr)	Time-Peak (mins)
15 Summer	105.21	16
30 Summer	67.96	28
60 Summer	41.75	44
120 Summer	24.78	78
180 Summer	18.03	112
240 Summer	14.31	144
360 Summer	10.31	200
480 Summer	8.17	254
600 Summer	6.82	0
720 Summer	5.88	0
960 Summer	4.65	0
1440 Summer	3.33	0
2160 Summer	2.39	0
2880 Summer	1.88	0
4320 Summer	1.34	0
5760 Summer	1.06	0
7200 Summer	0.88	0
8640 Summer	0.75	0
10080 Summer	0.66	0
15 Winter	105.21	16
30 Winter	67.96	30
60 Winter	41.75	48
120 Winter	24.78	86
180 Winter	18.03	120

(c)1982-2006 Micro Drainage

Summary of Results for 100 year Return Period (+40%)

Storm Duration (mins)	Maximum Control (l/s)	Maximum Filtration (l/s)	Maximum Outflow (l/s)	Maximum Water Level (m OD)	Maximum Depth (m)	Maximum Volume (m³)	Status
240 Winter	5.3	0.0	5.3	39.8813	0.1113	5.3	O K
360 Winter	5.3	0.0	5.3	39.7778	0.0078	0.4	O K
480 Winter	4.5	0.0	4.5	39.7700	0.0000	0.0	O K
600 Winter	3.7	0.0	3.7	39.7700	0.0000	0.0	O K
720 Winter	3.2	0.0	3.2	39.7700	0.0000	0.0	O K
960 Winter	2.5	0.0	2.5	39.7700	0.0000	0.0	O K
1440 Winter	1.8	0.0	1.8	39.7700	0.0000	0.0	O K
2160 Winter	1.3	0.0	1.3	39.7700	0.0000	0.0	O K
2880 Winter	1.0	0.0	1.0	39.7700	0.0000	0.0	O K
4320 Winter	0.7	0.0	0.7	39.7700	0.0000	0.0	O K
5760 Winter	0.6	0.0	0.6	39.7700	0.0000	0.0	O K
7200 Winter	0.5	0.0	0.5	39.7700	0.0000	0.0	O K
8640 Winter	0.4	0.0	0.4	39.7700	0.0000	0.0	O K
10080 Winter	0.4	0.0	0.4	39.7700	0.0000	0.0	O K

Storm Duration (mins)	Rain (mm/hr)	Time-Peak (mins)
240 Winter	14.31	150
360 Winter	10.31	196
480 Winter	8.17	0
600 Winter	6.82	0
720 Winter	5.88	0
960 Winter	4.65	0
1440 Winter	3.33	0
2160 Winter	2.39	0
2880 Winter	1.88	0
4320 Winter	1.34	0
5760 Winter	1.06	0
7200 Winter	0.88	0
8640 Winter	0.75	0
10080 Winter	0.66	0

(c)1982-2006 Micro Drainage

Rainfall Details

Region	ENG+WAL	Shortest Storm (mins)	15
Return Period (years)	100	Longest Storm (mins)	10080
M5-60 (mm)	20.600	Summer Storms	Yes
Ratio-R	0.438	Winter Storms	Yes
Cv (Summer)	0.750	Climate Change %	+40
Cv (Winter)	0.840		

Time / Area Diagram

Total Area (ha) = 0.066

Time (mins) from:	**to:**	**Area (ha)**
0	4	0.066

(c)1982-2006 Micro Drainage

Cellular Storage Details

Infil Coef - Base (m/hr)	0.000000	Porosity	0.95
Infil Coef - Sides (m/hr)	0.000000	Invert Level (m)	39.770
Safety Factor	2.0	Ground Level (m)	40.900

Depth (m)	Area (m²)	Depth (m)	Area (m²)	Depth (m)	Area (m²)	Depth (m)	Area (m²)	Depth (m)	Area (m²)	Depth (m)	Area (m²)
0.00	50.0	0.50	50.0	1.00	50.0	1.50	50.0	2.00	50.0	2.50	50.0
0.10	50.0	0.60	50.0	1.10	50.0	1.60	50.0	2.10	50.0		
0.20	50.0	0.70	50.0	1.20	50.0	1.70	50.0	2.20	50.0		
0.30	50.0	0.80	50.0	1.30	50.0	1.80	50.0	2.30	50.0		
0.40	50.0	0.90	50.0	1.40	50.0	1.90	50.0	2.40	50.0		

Hydro-Brake Outflow Control

Design Head (m)	0.720	Hydro-Brake Type	MD6	Invert Level (m)	39.450
Design Flow (l/s)	5.5	Diameter (mm)	105		

Depth (m)	Flow (l/s)	Depth (m)	Flow (l/s)	Depth (m)	Flow (l/s)	Depth (m)	Flow (l/s)	Depth (m)	Flow (l/s)
0.10	3.3	0.80	5.7	2.00	9.0	4.00	12.7	7.00	16.8
0.20	5.4	1.00	6.4	2.20	9.4	4.50	13.5	7.50	17.4
0.30	5.3	1.20	7.0	2.40	9.8	5.00	14.2	8.00	17.9
0.40	5.1	1.40	7.5	2.60	10.2	5.50	14.9	8.50	18.5
0.50	5.0	1.60	8.0	3.00	11.0	6.00	15.5	9.00	19.0
0.60	5.2	1.80	8.5	3.50	11.9	6.50	16.2	9.50	19.5

(c)1982-2006 Micro Drainage

Summary of Results for 100 year Return Period (+40%)

Half Drain Time : 38 minutes

Storm Duration (mins)	Maximum Filtration (l/s)	Maximum Outflow (l/s)	Maximum Water Level (m OD)	Maximum Depth (m)	Maximum Volume (m³)	Status
15 Summer	4.2	4.2	40.7088	0.2587	12.5	O K
30 Summer	4.2	4.2	40.7513	0.3012	14.6	O K
60 Summer	4.2	4.2	40.7563	0.3062	14.9	O K
120 Summer	4.2	4.2	40.7213	0.2712	13.1	O K
180 Summer	4.2	4.2	40.6778	0.2277	11.0	O K
240 Summer	4.2	4.2	40.6368	0.1867	9.0	O K
360 Summer	4.2	4.2	40.5708	0.1208	5.8	O K
480 Summer	4.2	4.2	40.5268	0.0768	3.7	O K
600 Summer	4.2	4.2	40.5033	0.0533	2.5	O K
720 Summer	3.8	3.8	40.4953	0.0452	2.1	O K
960 Summer	3.1	3.1	40.4868	0.0367	1.7	O K
1440 Summer	2.2	2.2	40.4768	0.0267	1.2	O K
2160 Summer	1.6	1.6	40.4693	0.0193	0.9	O K
2880 Summer	1.3	1.3	40.4653	0.0153	0.7	O K
4320 Summer	0.9	0.9	40.4608	0.0108	0.4	O K
5760 Summer	0.7	0.7	40.4588	0.0088	0.3	O K
7200 Summer	0.6	0.6	40.4573	0.0073	0.3	O K
8640 Summer	0.5	0.5	40.4563	0.0063	0.2	O K
10080 Summer	0.5	0.5	40.4558	0.0058	0.2	O K
15 Winter	4.2	4.2	40.7468	0.2967	14.4	O K
30 Winter	4.2	4.2	40.7998	0.3497	17.0	O K
60 Winter	4.2	4.2	40.8033	0.3532	17.2	FLOOD RISK
120 Winter	4.2	4.2	40.7503	0.3002	14.5	O K
180 Winter	4.2	4.2	40.6838	0.2337	11.3	O K

Storm Duration (mins)	Rain (mm/hr)	Time-Peak (mins)
15 Summer	105.21	16
30 Summer	67.96	30
60 Summer	41.75	46
120 Summer	24.78	80
180 Summer	18.03	112
240 Summer	14.31	144
360 Summer	10.31	204
480 Summer	8.17	260
600 Summer	6.82	312
720 Summer	5.88	370
960 Summer	4.65	490
1440 Summer	3.33	734
2160 Summer	2.39	1080
2880 Summer	1.88	1440
4320 Summer	1.34	2200
5760 Summer	1.06	2856
7200 Summer	0.88	3616
8640 Summer	0.75	4384
10080 Summer	0.66	5128
15 Winter	105.21	17
30 Winter	67.96	30
60 Winter	41.75	50
120 Winter	24.78	86
180 Winter	18.03	122

(c)1982-2006 Micro Drainage

Summary of Results for 100 year Return Period (+40%)

Storm Duration (mins)	Maximum Filtration (l/s)	Maximum Outflow (l/s)	Maximum Water Level (m OD)	Maximum Depth (m)	Maximum Volume (m³)	Status
240 Winter	4.2	4.2	40.6218	0.1717	8.3	O K
360 Winter	4.2	4.2	40.5293	0.0793	3.8	O K
480 Winter	3.9	3.9	40.4968	0.0468	2.2	O K
600 Winter	3.3	3.3	40.4893	0.0392	1.8	O K
720 Winter	2.9	2.9	40.4843	0.0342	1.6	O K
960 Winter	2.3	2.3	40.4773	0.0272	1.2	O K
1440 Winter	1.6	1.6	40.4693	0.0192	0.9	O K
2160 Winter	1.1	1.1	40.4638	0.0138	0.6	O K
2880 Winter	0.9	0.9	40.4613	0.0113	0.5	O K
4320 Winter	0.6	0.6	40.4578	0.0078	0.3	O K
5760 Winter	0.5	0.5	40.4563	0.0063	0.2	O K
7200 Winter	0.4	0.4	40.4553	0.0053	0.2	O K
8640 Winter	0.4	0.4	40.4548	0.0048	0.1	O K
10080 Winter	0.4	0.4	40.4543	0.0043	0.1	O K

Storm Duration (mins)	Rain (mm/hr)	Time-Peak (mins)
240 Winter	14.31	154
360 Winter	10.31	208
480 Winter	8.17	250
600 Winter	6.82	310
720 Winter	5.88	370
960 Winter	4.65	490
1440 Winter	3.33	736
2160 Winter	2.39	1104
2880 Winter	1.88	1476
4320 Winter	1.34	2204
5760 Winter	1.06	2880
7200 Winter	0.88	3672
8640 Winter	0.75	4360
10080 Winter	0.66	5024

(c)1982-2006 Micro Drainage

Rainfall Details

Region	ENG+WAL	Shortest Storm (mins)	15
Return Period (years)	100	Longest Storm (mins)	10080
M5-60 (mm)	20.600	Summer Storms	Yes
Ratio-R	0.438	Winter Storms	Yes
Cv (Summer)	0.750	Climate Change %	+40
Cv (Winter)	0.840		

Time / Area Diagram

Total Area (ha) = 0.059

Time (mins) from:	**to:**	**Area (ha)**
0	4	0.059

(c)1982-2006 Micro Drainage

Porous Car Park Details

Infil Coef - Base (m/hr)	0.185000	Invert Level (m)	40.450
Membrane Percolation (mm/hr)	1000	Cover Level (m)	40.900
Safety Factor	2.0	Slope (1:x)	10000.0
Porosity	0.30	Max Percolation (l/s)	45.1
Length (m)	32.5	Depression Storage (mm)	5
Width (m)	5.0	Evaporation (mm/day)	3

(c)1982-2006 Micro Drainage

Contaminated
Land
Solutions

Appendix E – Soakage Test

Soil Infiltration Rate (BRE Digest 365)

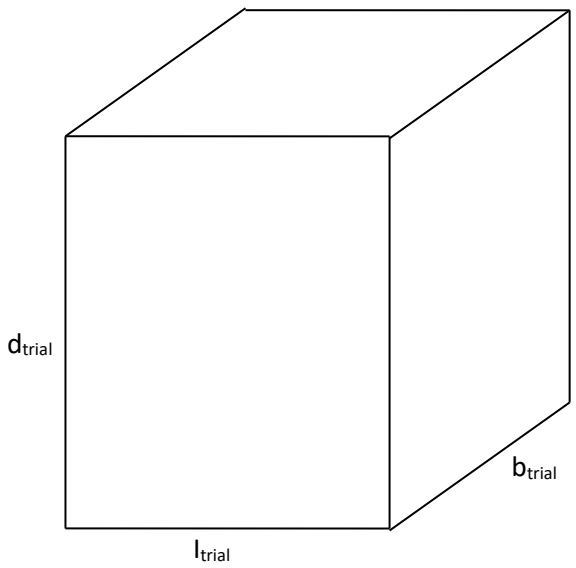

0.00m – CONCRETE

0.10m – Mid Brown Sandy CLAY containing Flint Gravel, Pebbles and Cobbles.

0.80m – Mid Brown Clayey SAND & GRAVEL. Gravel is Flint

SOAK AWAY TEST NO: 1

Length of Trial Pit l_{trial} = **0.30m**

Width of Trial Pit b_{trial} = **0.30m**

Depth of Trial Pit d_{trial} = **1.00m**

Free Volume (if fill used) V_{trial} = 35%

75% depth of pit: d_{75}: (d_{trial} x 0.75) = **0.75m**

50% depth of pit: d_{50}: (d_{trial} x 0.50) = **0.50m**

25% depth of pit: d_{25}: (d_{trial} x 0.25) = **0.25m**

Test 1 – time to fall from 75% depth to 25% depth = T1 = **432 Seconds**

Test 2 – time to fall from 75% depth to 25% depth = T2 = **905 Seconds**

Test 3 – time to fall from 75% depth to 25% depth = T3 = **909 Seconds**

Longest time to fall from 75% depth to 25% depth = T_{lg} = Max(T1, T2, T3) = **909 Seconds**

Storage Volume from 75% depth to 25% depth = V_{p75_25} = (l_{trial} x b_{trial} x (d_{75} – d_{25})) x V_{trial} = **0.045m^3**

Internal surface area to 50% depth = A_{p50} = ((l_{trial} x b_{trial}) + (l_{trial} + b_{trial}) x 2 x d_{50}) = **0.69m^2**

Surface area of soakaway to 50% storage depth A_{s50} = 2 x (l_{trial} + b_{trial}) x d_{trial} / 2 = **0.60m^2**

Soil infiltration rate = F = V_{p75_25} / (A_{p50} x T_{lg}) = **<u>71.75 x 10^{-6} m/s</u>**

Soil Infiltration Rate (BRE Digest 365)

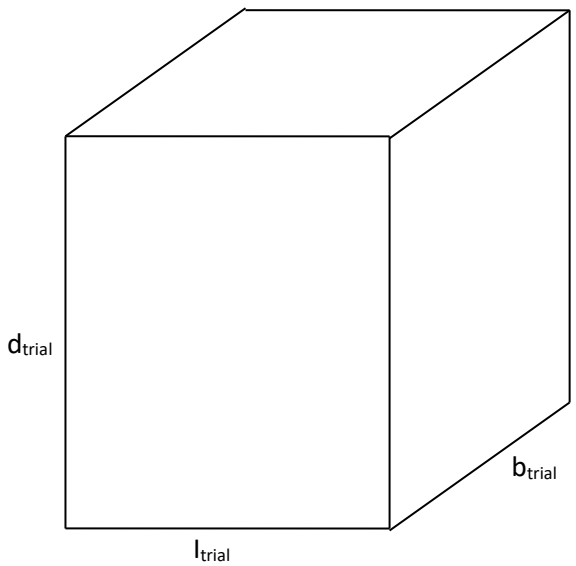

0.00m – CONCRETE

0.15m – Mid Brown Sandy CLAY containing Brick fragments and Flint Gravel

0.80m – Mid Brown Clayey SAND & GRAVEL. Gravel is Flint

SOAK AWAY TEST NO: 2

Length of Trial Pit l_{trial} = **0.30m**
Width of Trial Pit b_{trial} = **0.30m**
Depth of Trial Pit d_{trial} = **1.00m**
Free Volume (if fill used) V_{trial} = 35%

75% depth of pit: d_{75}: (d_{trial} x 0.75) = **0.75m**
50% depth of pit: d_{50}: (d_{trial} x 0.50) = **0.50m**
25% depth of pit: d_{25}: (d_{trial} x 0.25) = **0.25m**

Test 1 – time to fall from 75% depth to 25% depth = T1 = **482 Seconds**
Test 2 – time to fall from 75% depth to 25% depth = T2 = **688 Seconds**
Test 3 – time to fall from 75% depth to 25% depth = T3 = **1267 Seconds**

Longest time to fall from 75% depth to 25% depth = T_{lg} = Max(T1, T2, T3) = **1267 Seconds**

Storage Volume from 75% depth to 25% depth = V_{p75_25} = (l_{trial} x b_{trial} x (d_{75} – d_{25})) x V_{trial} = **0.045m^3**

Internal surface area to 50% depth = A_{p50} = ((l_{trial} x b_{trial}) + (l_{trial} + b_{trial}) x 2 x d_{50}) = **0.69m^2**

Surface area of soakaway to 50% storage depth A_{s50} = 2 x (l_{trial} + b_{trial}) x d_{trial} / 2 = **0.60m^2**

Soil infiltration rate = F = V_{p75_25} / (A_{p50} x T_{lg}) = **<u>51.47 x 10^{-6} m/s</u>**

Contaminated
Land
Solutions

Appendix F – Specification for Below Ground Building Drainage

INDEX

1. GENERAL 1

1.1. COMPLIANCE WITH THIS SPECIFICATION 1
1.2. COMPLIANCE WITH BYE-LAWS, REGULATIONS, BUILDING ACT ETC. 1
1.3. ACCURACY OF DIMENSIONS 1
1.4. COMPLIANCE WITH BRITISH STANDARDS, STATUTORY REGULATIONS ETC. 1
1.5. EXISTING SERVICES 1
1.6. SETTING-OUT 2
1.7. QUALITY OF MATERIALS AND WORKMANSHIP AND TESTS 2
1.8. EXAMINATION OF WORK 2
1.9. SAFETY IN SEWERS 2
1.10. USE OF MATERIALS 2
1.11. SITE INVESTIGATION 2
1.12. ADVERSE GROUND CONDITIONS 3
1.13. OBSTRUCTIONS 3
1.14. WEATHER CONDITIONS 3
1.15. SCHEDULE OF CONDITIONS 3
1.16. RESPONSIBILITY 3

2. MATERIALS 4

2.1. GENERAL 4
2.2. STANDARD OF MATERIALS 4
2.3. STORAGE OF MATERIALS 4
2.4. HANDLING AND USE OF MATERIALS 4
2.5. PLASTIC SHEETING AND SLEEVING 4
2.6. VITRIFIED CLAY PIPES AND FITTINGS 4
2.7. CONCRETE CYLINDRICAL PIPES AND FITTINGS 4
2.8. DUCTILE IRON PIPES AND FITTINGS 4
2.9. LAND DRAINS 5
2.10. UNPLASTICISED PVC PIPES AND FITTINGS 5
2.11. RUBBER RINGS AND LUBRICANTS 5
2.12. PIPE BEDDING MATERIALS 5
2.13. BACKFILL MATERIAL 5
2.14. COMPRESSIBLE FILLER AND PACKING FOR PIPELINES 5
2.15. PRECAST CONCRETE SETTING BLOCKS FOR PIPES 5
2.16. CLAY PUDDLE 6
2.17. PRECAST CONCRETE MANHOLES AND SOAKAWAYS 6
2.18. PLASTIC CHAMBERS AND RINGS 6
2.19. MANHOLE COVERS AND FRAMES 6
2.20. MANHOLE STEP IRONS 6
2.21. NUTS, SCREWS, WASHERS AND BOLTS 6
2.22. SAFETY CHAINS 6
2.23. HANDRAILS AND BALUSTERS 6
2.24. LADDERS 7
2.25. FIXINGS FOR METALWORK 7

3. EXCAVATION AND BACKFILLING 7

3.1. SUPERVISION 7
3.2. EXCAVATION 7
3.3. EARTHWORKS 8
3.4. DEALING WITH WATER 8
3.5. TEMPORARY DRAINS 8
3.6. BACKFILLING 8

4. CONSTRUCTION OF PIPELINES 9

4.1. PIPE LAYING GENERALLY 9

4.2. GRANULAR BEDDING 9
4.3. CONCRETE PROTECTION TO PIPES 9
4.4. COMPLETION OF PIPE SURROUND WITH TYPE B MATERIAL 9
4.5. THRUST BLOCKS 10
4.6. PIPE JOINT GENERALLY 10
4.7. CUTTING PIPES 10
4.8. CONNECTIONS TO SEWERS 10
4.9. TOLERANCES IN PIPE LAYING 10

5. MANHOLE AND CHAMBERS 10

5.1. BRICK MANHOLES 10
5.2. PRECAST CONCRETE MANHOLES 10
5.3. INVERTS AND BENCHING 10
5.4. WATERTIGHTNESS OF MANHOLES AND CHAMBERS 11
5.5. SETTING MANHOLE COVERS AND FRAMES 11
5.6. PIPES AND JOINTS ADJACENT TO STRUCTURES 11

6. CLEANSING AND TESTING 11

6.1. CLEANSING OF SEWERS AND MANHOLES 11
6.2. PRECAUTIONS PRIOR TO TESTING PIPELINES 11
6.3. TESTING GRAVITY SEWERS 11
6.4. CCTV INSPECTION AND PIPELINES 12
6.5. INFILTRATION 12
6.6. TESTING OF PUMPING MAINS 12

7. CONCRETE WORK 12

7.1. GENERAL 12
7.2. COMPLIANCE WITH BRITISH STANDARDS 13
7.3. CEMENT 13
7.4. AGGREGATES 13
7.5. WATER 13
7.6. ADMIXTURES 13
7.7. REINFORCEMENT STEEL 13
7.8. BENDING OF REINFORCEMENT STEEL 14
7.9. FIXING OF REINFORCEMENT STEEL 14
7.10. READY MIXED CONCRETE 15
7.11. CONCRETE MIXES 15
7.12. MIXING 15
7.13. TRANSPORTING, PLACING AND COMPACTING 15
7.14. CONSTRUCTION JOINTS 15
7.15. CURING 15
7.16. CONCRETING IN COLD WEATHER 16
7.17. DESIGN AND CONSTRUCTION OF FORMWORK AND FALSEWORK 16
7.18. CLEANSING AND TREATMENT OF FORMWORK 16
7.19. STRIKING OR REMOVAL OF FORMWORK AND FALSEWORK 16
7.20. SURFACE FINISHES PRODUCED WITHOUT FORMWORK 16
7.21. SURFACE FINISH PRODUCED WITH FORMWORK 16
7.22. BUILT-IN ITEMS 17
7.23. GRANOLITHIC CONCRETE 17
7.24. TIE BOLTS FOR FORMWORK 17
7.25. TOLERANCES 17

8. BRICKWORK 17

8.1. COMPLIANCE WITH SPECIFICATION 17
8.2. BRICKS 17
8.3. CEMENT 17
8.4. WATER 18
8.5. ADMIXTURES 18
8.6. SAND 18

8.7. LIME 18
8.8. MORTAR 18
8.9. CEMENTS AND GROUTS 19
8.10. BRICKLAYING 19
8.11. BRICKLAYING IN COLD WEATHER 19

1. GENERAL

1.1. COMPLIANCE WITH THIS SPECIFICATION

1.1.1. All workmanship materials shall be strictly in accordance with the Clauses of this specification or amendments. Should the Contractor wish to deviate from this specification in any way he shall agree such variations with the Engineer in writing. Similarly, any queries regarding this specification shall be raised by the Contractor prior to Tendering. Thereafter, the successful Tenderer shall be deemed to be familiar with all Clauses and to have allowed for same in his Tender.

1.1.2. This specification has been written to relate solely to the Main Contractor (referred to as the Contractor) but will apply to his agreed sub-contractor etc., in all aspects.

1.2. COMPLIANCE WITH BYE-LAWS, REGULATIONS, BUILDING ACT etc.

1.2.1. The Contractor shall serve all Notices and arrange for inspection of the drainage and all other work as required by the relevant Authority. The Contractor shall notify the Engineer of any decisions made by the Local Authority representative if they in any way affect the Engineer's details before the work is carried out.

1.2.2. Approval of the work by the Local Authority representative shall not necessarily mean acceptance by the Engineer.

1.3. ACCURACY OF DIMENSIONS

1.3.1. The Contractor shall be deemed to have examined all relevant drawings, prior to commencing construction and to have satisfied himself as to the accuracy of all running and complimentary dimensions and levels. Any discrepancies shall be reported to the Engineer who will issue the necessary instructions. Such discrepancies shall be reported within 7 days of receipt of drawings.

1.4. COMPLIANCE WITH BRITISH STANDARDS, STATUTORY REGULATIONS etc.

1.4.1. All documents referred to in this specification shall be those current at the time of tender together with all amendments and addendums.

1.4.2. All drainage and utility works shall be in accordance with all relevant British Standards, Statutory Regulations and other documents and in accordance with the following and any other documents, referred to therein, as noted below:

i. Public Health Acts
ii. Water Acts
iii. Local Authority and Water Authority Bye-Laws
iv. Building Regulations
v. Department of Transport Specification for Highway Works (hereinafter referred to as the DTp Specification).

1.5. EXISTING SERVICES

1.5.1. Prior to commencement of any works the Contract shall:

i. By consultation with the relevant Authorities, verify/ determine the precise size, location, depth and extent of all existing watercourses, sewers, services and any apparatus within or adjacent to the site boundaries which are likely to affect the works or be affected by the works.
ii. Check with the Local and Statutory Authorities whether it will be necessary to provide any special sequence of working, earthwork support etc., in connection with the services and whether any restrictions on the type of plant used, excavations, depths etc., are necessary. The Contractor shall be deemed to have allowed for all such restrictions, conditions etc. in his Tender.
iii. Determine by trial hole investigation, the precise size, location and level of all sewers, manholes and services to which he is required to make a connection.
iv. Commence early negotiations with the Local Authority, Police and Statutory Authorities, in order to determine the constraints with regard to road closures, road opening notices, hours or working, lighting, traffic control, noise and safety requirements.
v. In addition, the Contractor shall take all necessary precautions to avoid causing any damage to, or interference with, flow in existing public sewers and watercourses.

1.6. SETTING-OUT

1.6.1. The Contractor shall be responsible for setting-out the works and for the correctness of the position and dimensions of all parts.

1.7. QUALITY OF MATERIALS AND WORKMANSHIP AND TESTS

1.7.1. All materials and workmanship shall be subject from time to time to such tests as the Engineer/Architect may direct.

1.7.2. The Contractor shall supply samples or materials and/or proposed sources of materials, as may be selected and required by the Engineer/Architect.

1.8. EXAMINATION OF WORK

1.8.1. The Contractor shall afford full opportunity to the Architect/Engineer/Local Authority to examine any work which will be covered up or put out of view and to examine all excavations before permanent work is to be placed thereon.

1.8.2. The Contractor shall give the Architect/Engineer/Local Authority least two working days notice of when any formation is to be covered with permanent work and before testing any pipeline.

1.8.3. Inspections will be carried out by the Engineer at his own discretion.

1.8.4. The Contractor shall keep a record of the final excavation level for all drainage works. This shall be submitted to the Quantity Surveyor daily and to the Architect/Engineer after completion of the drainage work. Level shall be taken at not more than 10.0m intervals along pipe runs and at manhole locations, the ends of pipe runs and positions of junctions.

1.8.5. The Contractor shall allow for adequate temporary planking and strutting of all excavations and safe access to enable all inspections to be carried out.

1.9. SAFETY IN SEWERS

1.9.1. Where work is required to be carried out within or adjacent to any sewer the Contractor shall have regard to the provisions of "Safe Working in Sewers and at Sewage Works" published by the National Joint Health and Safety Committee for the Water Service.

1.10. USE OF MATERIALS

1.10.1. Unless otherwise described in the specification, the use, installation, application or fixing or materials and components shall be in accordance with all applicable recommendations of the manufacturers.

1.10.2. The Contractor shall also take due regard of the specific circumstances including ground conditions and contamination in which the materials and components are used.

1.11. SITE INVESTIGATION

1.11.1. A site investigation has been carried out to establish the details and levels of the ground conditions and water levels on the site. The results given relate to the borehole and trial pit conditions only on the date shown in the report. In addition the water levels may be subject to seasonal variations. Tests have also been conducted specific to the borehole and trial pit positions on the site to show the encountered characteristics.

1.11.2. A copy of the site investigation document is enclosed with the Tender Documents. It is an indication, only, and give no assurance that there may not be a considerable variation of sub-soil conditions over the site as a whole.

1.11.3. The Contractor shall be deemed to have read the site investigation report and relevant drawings, have visited the site, and have consulted all available information concerning the sub-soil conditions, before submitting his Tender.

1.12. ADVERSE GROUND CONDITIONS

1.12.1. If, during the course of drainage excavations, the Contractor exposes any wells, swallow holes or natural faults, he shall inform the Engineer immediately who will issue an instruction accordingly.

1.12.2. The Contractor shall further inform the Engineer when any ground is exposed which show any visible signs of chemical contamination, backfilling or any variation in the ground conditions from those previously encountered.

1.13. OBSTRUCTIONS

1.13.1. Any obstructions to the new works shall be brought to the Engineer's attention prior to removal.

1.13.2. Full details of the obstruction shall be recorded and agreed. The method and extent of the removal of the obstruction shall also be agreed prior to proceeding.

1.14. WEATHER CONDITIONS

1.14.1. Due regard shall be taken of weather conditions, past and present, which may affect ground conditions.

1.14.2. In particular, attention is drawn to the effects of rain on the rate of flow of water through or across the ground, and the Contractor shall take such measures to prevent the passage of water adversely affecting excavations.

1.15. SCHEDULE OF CONDITIONS

1.15.1. Prior to commencing work on site, the Contractor shall ensure that a Schedule of Conditions has been compiled for any surrounding constructions, which may be affected by the works and agreed with all relevant parties.

1.16. RESPONSIBILITY

1.16.1. No approval nor acceptance shall relieve the Contractor of his responsibilities under the Contractor for the quality of materials and standard of workmanship in the works.

2. MATERIALS

2.1. GENERAL

2.1.1. For details of materials and workmanship for concrete, brickwork, grout etc., refer to Sections 7 & 8 of this specification.

2.2. STANDARD OF MATERIALS

2.2.1. Materials used in the permanent works shall comply with the appropriate British Standard Specification, except where any general or detailed provision in the specification or drawings shows to the contrary.

2.2.2. Wherever, in respect of any British Standard, a BSI Scheme of Supervision and Control is available, all materials required to comply with the Standard, or the containers of such materials, shall be marked with the BSI Certification Trade Mark (The Kitemark). This requirement shall not apply where the Architect/Engineer is satisfied and confirms to the Contractor, in writing, that Kitemarked materials are readily available. In such a case and where materials are required to comply with other British Standards, the Contractor shall submit to the Architect/Engineer Test Certificates, furnished by the supplier or manufacturer of the materials, indicating compliance with the relevant British Standard.

2.3. STORAGE OF MATERIALS

2.3.1. Materials and components shall be stored in such a manner as to preserve their quality and condition to the standards require by the Specification.

2.4. HANDLING AND USE OF MATERIALS

2.4.1. Materials and components shall be handled, used and installed in such a manner as to avoid damage or contamination and in accordance with all applicable recommendations of the manufacturers. Where appropriate, use shall be made of any Technical Advisory Services offered by manufacturers.

2.5. PLASTIC SHEETING AND SLEEVING

2.5.1. Plastic sheeting for waterproof underlay shall be free from tear and voids and be substantially free from pinholes and other discontinuities. It shall have a composition in accordance with Clause 3 of BS 6076 and a nominal film thickness of 125 um.

2.5.2. Tubular polythene film for use as a protective sleeving for buried iron pipes and fittings shall comply with the relevant provisions of BS 6076, except the that nominal layflat width for use with 100mm and 150mm nominal internal diameter pipelines incorporating mechanical flexible joints shall be 280mm and 400mm respectively.

2.6. VITRIFIED CLAY PIPES AND FITTINGS

2.6.1. Vitrified clay pipes and fittings for sewers shall comply with the relevant requirements of BS EN 295 and BS 65 and be or 'normal' type with flexible mechanical joints and 'Extra Strength' class.

2.6.2. Extra chemically resistant pipes and fittings shall comply with the relevant provisions of BS EN 295.

2.7. CONCRETE CYLINDRICAL PIPES AND FITTINGS

2.7.1. Unreinforced and reinforced concrete cylindrical pipes and fittings shall comply with the relevant provisions of BS EN 1916 and BS 5911 to the strength classes shown on the drawings.

2.8. DUCTILE IRON PIPES AND FITTINGS

2.8.1. Ductile iron pipes, fittings and joints shall comply with the relevant provisions of BS EN 598, except that a hot applied bitumen-based coating of Type 1, Grade C to BS EN 10300 shall be used.

2.9. LAND DRAINS

2.9.1. Land drainage pipes and fittings shall be of extra strength vitrified clayware to BS EN 295 and BS 65.

2.10. UNPLASTICISED PVC PIPES AND FITTINGS

2.10.1. Unplasticised PVC pressure pipes for pumping mains shall comply with the relevant provisions of BS EN 1452 and shall be not less than Class C.

2.10.2. Joints and fittings for pressure pipes shall comply with the relevant provisions of BS EN 1452.

2.10.3. Unplasticised PVC pipes, joints and fittings for gravity sewers shall comply with the relevant provisions of BS EN 1401-1 as applicable with flexible mechanical joints.

2.11. RUBBER RINGS AND LUBRICANTS

2.11.1. Rubber joint rings shall be Type 2, complying with the relevant provisions of BS EN 681, and shall be obtained from the pipe manufacturer.

2.11.2. Joint lubricants for sliding joints shall have no deleterious effect on either the joint rings or pipes and be unaffected by the liquid to be conveyed.

2.12. PIPE BEDDING MATERIALS

2.12.1. Refer to drawings.

2.13. BACKFILL MATERIAL

2.13.1. Beneath building structures, roads or hard standings backfill shall be a granular material in accordance with Clause 803 of the D.Tp. Specification and be capable of being consolidated to the specified degree of compaction.

2.13.2. Where drainage excavations are within 1.0m of the edge of a highway, or proposed carriageway the backfill shall be free draining granular material to permit adequate drainage.

2.14. COMPRESSIBLE FILLER AND PACKING FOR PIPELINES

2.14.1. Compressible filler for interrupting concrete protection to pipelines shall consist of bitumen impregnated insulating board to BS EN 622-1 and BS EN 622-4 or other equally compressible material. The thickness of compressible filler shall be as follows:-

Nominal Bore of Pipe (mm)	Thickness of Compressible Filler (mm)
Less than 450	18
150 – 1200	36
Exceeding 1200	54

2.14.2. Compressible packing for use between pipes and precast concrete setting blocks shall consist of two layers of bitumen damp-proof sheeting complying with BS 6398, Type G.

2.15. PRECAST CONCRETE SETTING BLOCKS FOR PIPES

2.15.1. Precast setting blocks for pipes shall have rectangular faces, with sufficient plan area to prevent punching of the blinding concrete or formation and to provide an adequate seating for the pipes. Blocks shall be manufactured from Grade GEN3 Concrete.

2.16. CLAY PUDDLE

2.16.1. Clay puddle shall be impervious to water and be free from sand grit, stones and other deleterious matter.

2.17. PRECAST CONCRETE MANHOLES AND SOAKAWAYS

2.17.1. Precast concrete manhole units shall comply with the relevant provisions of BS EN 1917 and BS 5911 : (Part 3).

2.17.2. Units which bed onto bases or onto which cover slabs or reducing slabs sit, shall be manufactured so that the imposed vertical loads are transmitted directly to the full wall thickness of the unit. For joints between units and underside of slabs, spigot ended sections shall only be used where the soffit of the slab is recessed to receive them.

2.18. PLASTIC CHAMBERS AND RINGS

2.18.1. Plastic chambers and rings including demarcation chambers, shall comply with BS EN 13598-1 and BS EN 13598-2

2.19. MANHOLE COVERS AND FRAMES

2.19.1. Manhole covers and frames shall comply with the relevant provisions of BS EN 124 with a minimum clear opening of 600mm. Manhole covers shall have closed keyways. Grades of manhole covers required are shown on the drawings.

2.20. MANHOLE STEP IRONS

2.20.1. Step irons for manholes and other chambers shall comply with the relevant provisions of BS EN 13101.

2.21. NUTS, SCREWS, WASHERS AND BOLTS

2.21.1. Nuts, screws, washers and bolts shall comply with the relevant provisions of the appropriate British Standard as set out below:-

2.21.2. Block hexagon bolts, screws and nuts BS 4190

2.21.3. Metal washers for general purposes BS 4320

2.21.4. Bolting for pipes and fittings shall comply with the relevant provisions of BS EN 1092-2 and BS EN 1515-1 except that spheroidal graphite iron bolts for use with ductile iron pipes and fittings shall be manufactured from metal complying with the requirements of BS EN 1563 and BS EN 1564 for Grade 500/7.

2.21.5. Bolt threads shall be sufficient to ensure that nuts are full-threaded when tightened in their final position.

2.21.6. Where bolting is incompatible with the material being fixed, suitable isolating washers shall be used.

2.22. SAFETY CHAINS

2.22.1. Mild steel safety chains shall be 8mm nominal size Grade M(4) non-calibrated chain, Type 1, complying with BS EN 818-1.

2.22.2. After manufacture, mild steel safety chains shall be hot dip galvanised in accordance with BS EN ISO 1460 and BS EN ISO 1461.

2.23. HANDRAILS AND BALUSTERS

2.23.1. Mild steel tube and solid mild steel bar for handrails and balusters shall comply with BS 6180 and the relevant provisions of BS 1387 or BS EN 10255-1 Grade HFW2 and BS EN 10025 Grade S275, respectively.

2.23.2. After manufacture, mild steel handrails and balusters shall be hot dip galvanised in accordance with BS EN ISO 1461.

2.23.3. Protective barriers shall comply with the provisions of BS 6399-1 for Building-Use.

2.24. LADDERS

2.24.1. Mild steel ladders for vertical fixing shall comply with the relevant provisions of BS EN 14396.

2.25. FIXINGS FOR METALWORK

2.25.1. Rag and indented foundation bolts and nuts shall comply with the relevant provisions of BS 1494 (Part 2) and shall be hot dip galvanised in accordance with BS EN ISO 1460 and BS EN ISO 1461. Steel for rag and indented bolts shall in accordance with Clause 6.5.1 of BS 1494 (Part 2).

2.25.2. Mild and high tensile steel proprietary fixings shall be protected in accordance with the relevant provisions of the appropriate British Standard as set out below

Type of Fixing			
Type of protection	Cast-In	Expanding	
	Having no Machined Threads	Basic Major Diameter of Machine Thread	
		Not Exceeding 19mm	Exceeding 19mm
Hot dip Galvanised	BS. EN ISO 1461	-	-
Electroplate Zinc	BS EN ISO 2081 Zn10	BS. 7371-12	BS EN ISO 2081 Zn10

.

3. EXCAVATION AND BACKFILLING

3.1. SUPERVISION

3.1.1. No work shall commence on site until the Contractor has an experienced and competent person in full-time attendance.

3.2. EXCAVATION

3.2.1. The Contractor shall carry out his operations in such a manner as to avoid damage to, or deterioration of, the formation of excavations. All earthworks shall be carried out in accordance with BS 6031.

3.2.2. Soft spots shall be removed from the bottom of trenches and other excavations, which shall then be refilled to formation level with the same material as the permanent work which is to rest on that formation. Any void, which results from over excavation below formation level, shall be refilled in the same manner at the Contractor's cost.

3.2.3. Trenches shall be excavated so that the effective width is maintained within any limits imposed by the design of the pipelines.

3.2.4. Trenches in rock for pumping mains up to 100mm nominal bore shall be excavated to provide a minimum clearance of 100mm around the outside of pipe barrels and joints. For pipes with nominal bore exceeding 100mm the minimum clearance shall be increased to 150 mm.

3.3. EARTHWORKS

3.3.1. The Contractor shall be deemed to have allowed for all necessary earthwork support for carrying out the works in the ground conditions described in the Site Investigation Report, and any other data as established under Clause A11 of this specification, and to have complied with all relevant statutory requirements.

3.3.2. Where excavations are adjacent to existing excavations, foundations, roadways, services or buildings etc, and may affect these, they are so described in the Bill of Quantities and/or Contract Documents. The Contractor shall be deemed to have allowed for all temporary works, working sequences etc., necessary to provide adequate support and prevent any movement or damage as such.

3.4. DEALING WITH WATER

3.4.1. The Contractor shall not allow water to accumulate in any part of the works and shall provide all necessary pumping plant. Water arising from or draining into the works shall be drained or pumped to an approved dispersal point. Any drainage sumps required shall, where practicable, be sited outside the area excavated for the permanent works, and shall be refilled with concrete Grade GEN1 (C10) to the level of the underside of the adjacent permanent works.

3.4.2. The Contractor shall take all necessary precautions to prevent any adjacent ground from being adversely affected by loss of fines through any de-watering process.

3.5. TEMPORARY DRAINS

3.5.1. Where temporary drains (trench sub-drains) are required, they shall be laid in a narrow trench or grip formed below the bottom of the excavation in an approved position. The pipes shall be open-joined and shall be surrounded with free draining granular material.

3.5.2. If required, grouting pipes shall be inserted in the line of the temporary drains at intervals not exceeding 25m, and the drains shall be solidly filled with grout: G3 or G4 the grouted pipes being cut off on completion, care being taken to avoid impregnation of any granular bedding material around the main pipeline.

3.6. BACKFILLING

3.6.1. Subject to the requirements of Section 1.8 backfilling shall, wherever practicable, be undertaken immediately the specified operations preceding it have been completed. Backfilling shall not, however, be commenced until the works to be covered have achieved a strength sufficient to withstand all loading imposed thereon.

3.6.2. Backfilling around manholes and other structures shall be undertaken in such a manner as to avoid uneven loading and where appropriate, as the permanent work is built.

3.6.3. Filling material shall be deposited in layers not exceeding 225mm unconsolidated thickness, and then fully compacted to form a stable backfill.

3.6.4. Where backfill complying with Clause 803 of the D.Tp. Specification has been specified, it shall be properly consolidated in layers not exceeding 150mm with a roller, vibrating roller or mechanics rammer in accordance with Table 8/1 or the D.Tp. Specification.

3.6.5. Where the excavations have been supported and the supports are to be removed these, where practicable, shall be withdrawn progressively as backfilling proceeds in such a manner as to minimise the danger of collapse and all voids formed behind the supports shall be carefully filled and compacted.

4. CONSTRUCTION OF PIPELINES

4.1. PIPE LAYING GENERALLY

4.1.1. Where pipes are to be bedded on the trench bottom, the formation shall be trimmed and levelled to provide even bedding of the pipeline and shall be free from all extraneous matter that may damage the pipeline.

4.1.2. Where socketed pipes are to be laid directly on the trench bottom, on granular or sand bed, joint holes shall be formed in the formation or bedding material to ensure that each pipe is uniformly supported throughout the length of its barrel and to enable the joint to be made.

4.1.3. Pipes shall only be laid on setting blocks where a concrete bed or cradle is used.

4.1.4. Suitable measures shall be taken to prevent soil or other material from entering pipes and to anchor each pipe to prevent flotation or other movement before the works are complete.

4.2. GRANULAR BEDDING

4.2.1. Granular bedding for pipes shall be constructed and compacting granular bedding material over the full width of the pipe trench. The granular material shall be gently and evenly fed into the trench through moveable chutes, steel pipes or shoveled in. Under no circumstance shall granular material be tipped direct from a lorry, dumper truck or barrow from the top of the trench.

4.2.2. After the pipes have been laid, additional granular material shall, if required, be placed and compacted equally on each side of the pipes and, where practicable, this shall be done in sequence wit the removal of the trench supports.

4.2.3. Where, in the opinion of the Architect/Engineer, the flow of ground water is likely to transport fine soil particles, water stops or puddled clay extending up through the bedding and side fill shall be placed across the trench immediately downstream of any drainage sumps.

4.2.4. Where shown on the drawings, a geotextile membrane shall be used to totally enclose the pipe bedding.

4.3. CONCRETE PROTECTION TO PIPES

4.3.1. Pipes to be bedded on or cradled with concrete shall be supported under the barrel at both ends by precast concrete setting blocks, the top face of each block being covered with compressible packing.

4.3.2. Concrete provided as a protection to pipes shall be Grade GEN 3 (C20), placed to the required depth in one operation. Concrete protection shall be interrupted over its full cross section at each flexible joint by a shaped formed of compressible filler.

4.3.3. The concrete shall be gently placed and evenly fed into the trench, through movable chutes or steel pipes, or shoveled in. All chutes and other equipment shall be constantly kept free of hardened concrete.

4.3.4. Under no circumstances shall concrete be tipped direct from lorry or mounted mixers, dumper trucks or barrows for the top of the trench.

4.3.5. Concrete shall be gently placed on one side of the pipeline and carefully worked under the pipe, ensuring that the placed concrete is well compacted and that there are no voids left below the pipe. The concrete shall then be brought up evenly on either side of the pipe, ensuring that the placed concrete is evenly and firmly compacted.

4.4. COMPLETION OF PIPE SURROUND WITH TYPE B MATERIAL

4.4.1. The pipe surround material shall, where required, be placed and compacted over the full width of the trench, in layers not exceeding 150mm before compaction, to a minimum finished thickness of 300mm above the crown of the pipes.

4.4.2. Subsequent filling shall then be carried out as specified in Section 3.6.

4.5. THRUST BLOCKS

4.5.1. Before any internal pressure is applied to a pumping main, any necessary thrust blocks shall be cast in Grade GEN 3 (C20) concrete, in contact with undisturbed ground and allowed to develop adequate strength.

4.6. PIPE JOINT GENERALLY

4.6.1. Pipe jointing surfaces and components shall be kept clean and free from extraneous matter until the joints have been made or assembled. Care shall be taken to ensure that there is no ingress of grout or other extraneous material into the joint annulus after the joint has been made.

4.6.2. Where pumping mains are laid to curves, the deflection of any pipe joint shall not exceed three-quarters of the maximum deflection recommended by the manufacturer.

4.7. CUTTING PIPES

4.7.1. Pipes shall be cut by a method, which provides a clean square profile, without splitting or fracturing the pipe wall. Where necessary, the cut ends of pipes shall be formed to the tapers and chamfers suitable for the type of joint to be used.

4.8. CONNECTIONS TO SEWERS

4.8.1. Where junction pipes for future connections are required, they shall be inserted as necessary during construction of the sewers and the ends of connections and pipes not needed for immediate use shall be closed with purpose made stoppers, discs or joiners. The position of all junctions shall be recorded by the Contractor by measurement from the manhole immediately downstream and notified to the Architect/Engineer, before backfilling is carried out.

4.9. TOLERANCES IN PIPE LAYING

4.9.1. The position of the internal face of any pipeline shall not deviate from the line and level shown on the drawings by more than + 20mm, provided that no pipe shall have a reverse gradient.

5. MANHOLE AND CHAMBERS

5.1. BRICK MANHOLES

5.1.1. Brick manholes shall be built in English Bond. All bed and vertical joints shall be filled solid with all exposed work being flush jointed as work proceeds.

5.2. PRECAST CONCRETE MANHOLES

5.2.1. Precast concrete chamber and shaft sections shall be set vertical, with step irons, ladders and slabs aligned correctly.

5.2.2. The jointing material for manhole units shall be in mortar or a proprietary bitumen or resin mastic sealant, with the concrete surface primed with an appropriate compound.

5.2.3. Joints shall be made so that the required jointing material completely fills the joint cavity. Any surplus jointing material, which is extruded inside the chamber or shaft, shall be trimmed off and joints shall be pointed on completion.

5.2.4. Concrete surrounds to manholes shall be Grade GEN 3 (C20) and the height of each concrete pour shall not exceed 2m. Each construction shall break with that of the chamber or shaft section by at least 150mm.

5.3. INVERTS AND BENCHING

5.3.1. Manhole inverts and benchings shall be formed of the materials detailed on the drawings.

5.3.2. Where a granolithic lining is required, the invert and benching shall be formed in Grade GEN 3 (C20) concrete with a screeded surface finish (ridged). The granolithic concrete shall be applied as soon as practicable thereafter. Grout for use with the separate application of granolithic lining shall be Class G1.

5.3.3. Where the finished surface is to be insitu concrete the concrete shall be Grade GEN 3 (C20). Surface finish to benching shall be steel float with channels having a fair surface finish.

5.3.4. Where practicable, the pipeline may be laid through the manhole and the crown broken out to the half diameter, provided flexible joints are situated on each side, no further than 600mm from the inner face of the manhole wall.

5.4. WATERTIGHTNESS OF MANHOLES AND CHAMBERS

5.4.1. Manholes and chambers shall be substantially watertight with no identifiable flow of water penetrating the permanent works.

5.5. SETTING MANHOLE COVERS AND FRAMES

5.5.1. Manhole frames shall be set to the required levels and falls for precast concrete manholes, on at least two and not more than four courses of Class B engineering brickwork. The frames shall be bedded and haunched over the base and sides of the frame in mortar.

5.6. PIPES AND JOINTS ADJACENT TO STRUCTURES

5.6.1. A flexible joint shall be provided as close as is feasible to the outside of any structure into which it is built, compatible with the satisfactory completion and subsequent movement of the joint.

5.6.2. The length of the next pipe (rocker pipe) away from the structure shall not exceed 0.75m for pipes up to 450mm, nominal bore, and 1.0m for pipes up to 750mm nominal bore.

6. CLEANSING AND TESTING

6.1. CLEANSING OF SEWERS AND MANHOLES

6.1.1. On completion of construction, internal surfaces of sewers and manholes shall be cleaned thoroughly to remove all deleterious matter, without such matter being passed forward into existing public sewers or watercourses. The sewers and manholes shall be maintained in a clean and serviceable condition by the Contractor until Contract completion.

6.2. PRECAUTIONS PRIOR TO TESTING PIPELINES

6.2.1. Before testing any pipelines, the Contractor shall ensure that it is anchored adequately and that thrusts from bends, branch outlets or from the pipeline ends are transmitted to solid ground or to a suitable temporary anchorage.

6.2.2. Open ends shall be stopped with plugs, caps or blank flanges properly jointed.

6.3. TESTING GRAVITY SEWERS

6.3.1. Gravity sewers shall be tested by the Contractor after they are jointed and before any concreting or backfilling is commenced, other than such as may be necessary for structural stability whilst under test. He shall be deemed to have allowed in his tender for all equipment, materials and labour necessary to undertake all testing required.

6.3.2. Sewers up to and including 750mm nominal bore shall be tested by means of an air and water test and sewers greater than 750mm nominal bore by a visual examination.

6.3.3. A further test shall be carried out after the backfilling is complete.

6.4. CCTV INSPECTION AND PIPELINES

6.4.1. A closed circuit television survey of the drainage shall be carried out by the contractor on completion of the works, the Contractor shall provide all equipment and personnel necessary for its operation.

6.4.2. The Contractor shall afford all reasonable facilities for personnel employed in the execution of CCTV inspection work on the site. Where faults are discovered by any tests, the subsequent repair and inspection costs necessary to check the repair shall be at the Contractor's cost.

6.5. INFILTRATION

6.5.1. Gravity sewers and manholes shall be tested for infiltration, after backfilling. All inlets to the system shall be effectively closed and any residual flow shall be deemed to be infiltration.

6.5.2. The sewers and manholes shall be accepted as satisfactory if the infiltration, including the infiltration into manholes, in 30 minutes does not exceed 0.5 litre per lineal metre per metre of nominal bore.

6.5.3. Notwithstanding the satisfactory completion of the above test, if there is any discernible flow of water entering the sewers or manholes at a point, which is, located either by visual or CCTV inspection, the Contractor shall take such measures as are necessary to stop such infiltration.

6.6. TESTING OF PUMPING MAINS

6.6.1. The Contractor shall be deemed to have allowed in his tender for all equipment, materials, labour and any other costs necessary to carry out all testing required.

6.6.2. Gauges used for testing pumping mains shall either be of the conventional circular type, not less than 200mm diameter, calibrated in metres head of water, or shall have a digital indicator capable of reading increments of 0.1m head. Before any gauge is used, the Contractor shall arrange for it to be checked independently, and a dated certificate of its accuracy shall be provided.

6.6.3. Before testing, valves shall be checked and sealed, the sections of main filled with water and the air released.

6.6.4. The pressure in the pumping main shall then be raised steadily until the specified test pressure is reached in the lowest part of the section, and the pressure shall be maintained at this level, by pumping if necessary, for a period of at least one hour. The pump shall then be disconnected and no further water shall be permitted to enter the pumping main for a further period of one hour. At the end of this period, and the loss measured by drawing off water form the pipeline until the pressure as at the end of the test is again reached.

6.6.5. The permissible loss shall not exceed 2 litres per metre nominal bore per kilometre length per metre head (calculated as the average head applied to the section) per 24 hours.

6.6.6. In addition to the tests on separate sections, the whole pipeline shall be tested on completion of the same pressure and by the same procedures as outlined for individual sections.

7. CONCRETE WORK

7.1. GENERAL

7.1.1. This section of the specification is for use with minor works such as insitu concrete manholes and inspection chambers. Where major insitu concrete structures such as pumping stations, retaining walls and tanks are to be constructed the works shall be carried our in accordance with the Specification for Mass and Insitu Reinforced Concrete.

7.2. COMPLIANCE WITH BRITISH STANDARDS

7.2.1. All concrete work shall be carried out in accordance with the relevant section of BS 8110 (Part 2) except that wherever the requirements of this specification differ from those of BS 8110 (Part 2) then the requirements of this specification shall be applied. All other British Standards noted or implied shall be applied as relevant.

7.3. CEMENT

7.3.1. Cement, including that used in precast concrete products, shall be sulphate resisting Portland Cement in accordance with BS 4027.

7.3.2. The Contractor shall provide a Manufacturer's Certificate, which must indicate that the cement complies with BS 4027.

7.3.3. The Contractor shall store the cement at the site either in bags sealed by the manufacturer before despatch, or in bulk containers. Consignments of cement in bags shall be stored in separate, easily accessible lots, so arranged that use follows the sequence of deliveries, in a suitable weatherproof building with raised floors giving adequate protection against the effects of moisture from any source whatsoever.

7.3.4. The Engineer may order that any consignment or part of a consignment which does not comply with the specification, or which has deteriorated shall not be used and shall be removed from site.

7.3.5. Under no circumstances shall High Alumina Cement be used.

7.3.6. All supplied cement shall be approved under the BSI registered firm "Quality Assurance" Scheme.

7.4. AGGREGATES

7.4.1. Aggregates shall be obtained from natural sources and shall consist of materials complying with the requirements of BS EN 12620 and PD 6682-1.

7.4.2. The Contractor shall inform the Engineer in writing of the source, grading and type of each aggregate to be used.

7.4.3. Aggregates for granolithic concrete shall comply with BS EN 12620 and PD 6682-1 and be 10 mm nominal size, graded in accordance with Table 6 E.1 in PD 6682-1.

7.5. WATER

7.5.1. Water used for mixing, washing out shutter and curing shall be obtained from a statutory water undertaking, or shall satisfy the recommendations given in BS EN 1008. No sea water or water from excavations shall be used.

7.6. ADMIXTURES

7.6.1. Admixtures shall not be used unless agreed in writing with the Engineer. If used, admixtures shall be chloride free and comply with BS EN 480.

7.7. REINFORCEMENT STEEL

7.7.1. Reinforcement steel shall comply with BS EN 10080, BS 4449, BS 4482 and BS 4483.

7.7.2. Steel fabric reinforcement shall be welded at the intersections and shall be delivered to the site in flat sheets, unless otherwise required.

7.7.3. All high yield bars shall be deformed to conform with Type 2, in Clause 14 and Appendix A of BS 4449.

7.8. BENDING OF REINFORCEMENT STEEL

7.8.1. Bending of reinforcement shall be carried out at ambient temperature, but not below 5 degrees centigrade and not heated to aid bending. The bending dimensions shall comply with BS 8666 unless otherwise specified on the bending schedules.

7.8.2. Reinforcement in position, irrespective of whether or not it is partly embedded in hardened concrete, shall not be bent without the Engineer's permission.

7.9. FIXING OF REINFORCEMENT STEEL

7.9.1. All bars and fabric shall be fixed in the positions and with the covers shown of the drawings, within the tolerance specified in Clause 7.3 of BS 8110 Part 1.

7.9.2. Non-structural connections for the positioning of reinforcement should be made with steel wire tying devices. Welding of bars will not be permitted. Care should be taken to ensure that the projecting ends of ties ends of tiles do not encroach into the concrete cover.

7.9.3. Spacers between beam links or bars where no links exist and the formwork should be of the same size as the nominal cover specified on the drawings.

7.9.4. Spacers, chairs or other such supports as may be necessary, should be used to maintain the specified nominal cover to the steel reinforcement at all times, and shall be included for in the Contractor's rates. Spacers or chairs should be placed at a maximum spacing of 1.0m and closer spacing may sometimes be necessary.

7.9.5. Spacers should be of such materials and design as will be durable and not lead to corrosion of the reinforcement and not cause spalling of the concrete cover. In concrete work requiring a fair finish the Contractor shall inform the Engineer, in writing, of the type of spacers he proposes to use and which shall be appropriate to the standard and type of finish specified and not impair the appearance or durability of the final structure.

7.9.6. Spacers and blocks made from cement, sand and small aggregate should be comparable in strength, durability, porosity and appearance to the surrounding concrete as far as possible. Concrete spacers and blocks made on site will not be allowed.

7.9.7. The fixing of reinforcement shall be checked by the Contractor before and during concreting. Particular attention shall be given to the position of top steel in cantilever sections. The Engineer shall be given the opportunity to check the positioning of all reinforcement and two working days notice shall be given prior to expected completion of fixing.

7.9.8. No concrete shall be poured until the reinforcement is in its correct position and free from mud, oil, paint, retarders, loose rust, snow and ice or other deleterious matter.

7.9.9. No laps shall be made in the reinforcement except where shown on the drawings or where agreed with the Engineer.

7.9.10. Fabric shall be lapped in accordance with the Engineer's drawings. Minimum lap unless otherwise noted 450mm.

7.10. READY MIXED CONCRETE

7.10.1. Ready mixed concrete will be permitted subject to the Engineer's agreement. The concrete and materials shall comply fully with the requirements of this specification and BS 8500 and Section 6 of BS 8110 (Part 1).

7.10.2. The plant must be certified as a Q.S.R.M.C. Approved Depot under the Quality Scheme for Ready Mixed Concrete Authorization Scheme.

7.10.3. Each load of ready-mixed concrete shall be accompanied by a detailed delivery ticket, which shall be kept at the site and shall be made available for inspection by the Architect/Engineer.

7.11. CONCRETE MIXES

7.11.1. Concrete mixes shall be prescribed mixes in accordance with BS8500 and be provided so as to have a medium workability. The Contractor shall provide the Engineer with the information requirements BS 8500 at least 28 days prior to concrete work commencing on site.

7.11.2. Compressive strength testing shall not, generally, be used to judge the compliance of a concrete but where required by the Architect/ Engineer, the Contractor shall provide evidence of the batch masses used to produce any concrete or undertake cube testing in accordance with BS EN 12350-1.

7.12. MIXING

7.12.1. The concrete shall be mixed in a power-driven batch-mixing machine.

7.13. TRANSPORTING, PLACING AND COMPACTING

7.13.1. Concrete shall be transported from the mixer and placed in the works as rapidly as practicable by methods, which will maintain the required workability and prevent segregation of the aggregate and displacement of the reinforcement or formwork, or other embedded items. It shall be placed as near as practicable to its final position and all equipment for transporting concrete shall be kept clean.

7.13.2. Prior to placing concrete the Contractor shall ensure that there are adequate materials available for the temporary protection of the concrete during adverse weather conditions.

7.13.3. Concrete shall be thoroughly compacted in its final position within 20 minutes of discharge from the mixer, unless carried in purpose made agitators operating continuously, when the time shall be within two hours of the introduction of the cement to the mix and within 20 minutes of the discharge from the agitator. After compaction the concrete shall completely fill the formwork and surround all reinforcement and ducts. Concrete shall not be redistributed in the form or mould by vibrators.

7.13.4. Segregated concrete will be rejected. Concrete that has become contaminated with soil or any other substances shall not be deposited in the work.

7.13.5. Unless otherwise agreed with the Engineer, and where appropriate all concrete shall be compacted by internal vibration. Vibration shall be operated continuously during the placing of each batch of concrete until the expulsion of air has virtually ceased, and in a manner which does not promote segregation of the ingredients.

7.14. CONSTRUCTION JOINTS

7.14.1. The Contractor shall obtain the Architect's/Engineer's approval to the positions and details of any construction joints before work is commenced.

7.15. CURING

7.15.1. Concrete shall be cured for at least 7 days by methods that shall ensure that cracking, distortion and efflorescence are minimised.

7.15.2. The Contractor shall submit to the Architect/Engineer full details of the method of curing he proposed prior to placing any concrete.

7.16. CONCRETING IN COLD WEATHER

7.16.1. Concreting may only be carried out whilst the air temperature is 2 degrees centigrade or below if the following conditions are met:

i. The aggregates and water used in the mid shall be free from snow, ice and frost.
ii. Before placing concrete, the formwork, reinforcement and any surface with which the fresh concrete will be in contact shall be free from snow, ice and frost.
iii. The initial temperature of the concrete shall at the time of placing be at least 5 degrees centigrade.
iv. All placed concrete shall be maintained at a temperature of now less than 5 degrees centigrade until the strength of concrete exceeds 5N/mm2.
v. Water curing shall not be used until this strength has been reached or where there is a possibility of the temperature approaching 0 degrees centigrade.

7.17. DESIGN AND CONSTRUCTION OF FORMWORK AND FALSEWORK

7.17.1. The responsibility for the design, construction and adequacy etc., of all temporary formwork and falsework shall be the sole responsibility of the Contractor.

7.17.2. Formwork and falsework shall be designed and construction such that the concrete can be properly placed, thoroughly compacted without loss or mortar matrix from the concrete and to maintain the correct position, shape and dimensions of the finished work. Formwork and falsework shall be firmly and adequately strutted, braced and/or tied and shall be so constructed as to be removable from the cast concrete without shock or damage.

7.18. CLEANSING AND TREATMENT OF FORMWORK

7.18.1. The interior of all formwork shall be thoroughly cleaned out before any concrete is placed. The faces in contact with the concrete shall be clean and treated with a suitable release agent, where applicable.

7.19. STRIKING OR REMOVAL OF FORMWORK AND FALSEWORK

7.19.1. All formwork shall be removed without shock or vibration that might damage the concrete. Formwork and falsework shall remain in position after placing of concrete in accordance with the requirements of Table 6.6 of BS 8110 (Part 1).

7.20. SURFACE FINISHES PRODUCED WITHOUT FORMWORK

i. Screeded Finish: The concrete shall be levelled and screeded to produce a uniform plain or ridged surface as required. No further work shall be applied to the surface unless it is first stage for a steel float finish. The finish shall be used to the top of the inverts and benchings prior to application of granolithic finish.
ii. Steel Float Finish: When the moisture film has disappeared and the concrete has hardened sufficiently to prevent laitance from being worked to the surface, the surface to a Screeded Finish (plain) shall be steel-trowelled under firm pressure to produce a dense, smooth, uniform surface free from trowel marks. The finish shall be used to the top of granolithic lining and top of sloping benching.

7.20.1. Where the type of finish is not given it shall be screeded.

7.21. SURFACE FINISH PRODUCED WITH FORMWORK

i. Rough Finish: This finish is for surfaces, which will not be visible on completion and is obtained by the use of moulds or properly designed forms. The surface shall be free from substantial voids, honeycombing or other large blemishes.

ii. Fair Finish: This finish is for surfaces, which will be visible on completion and is obtained from forms designed to produce a hard smooth with true, clean arises. Only very minor surface blemishes will be permitted. Fins and other projections shall be removed and the surface made good.

7.21.1. Where the type of finish is not given it shall be rough.

7.22. BUILT-IN ITEMS

7.22.1. Where pipes or other items are built into concrete, they shall be rigidly secured in position to prevent movement and shall be free from external coatings, which might adversely affect the bond. The Contractor shall take precautions to prevent the formation of air pockets, voids or other defects whilst the concrete is being placed.

7.23. GRANOLITHIC CONCRETE

7.23.1. Granolithic concrete shall be provided, laid and finished in accordance with the provisions of BS 8204 (Part 2).

7.24. TIE BOLTS FOR FORMWORK

7.24.1. Tie bolts or other devices to be built into concrete shall be agreed with the Engineer/Architect.

7.24.2. Only tie bolts, which avoid embedding any metal parts permanently within 50mm of the concrete surface, will be permitted. Voids remaining after the removal of all or part of each tie bolt shall be filled flush with the surrounding concrete using a freshly prepared cement and fine aggregate paste.

7.25. TOLERANCES

7.25.1. The maximum tolerances within each concrete work shall be constructed are as follows:

i. All setting-out dimensions ±6mm
ii. Sections of concrete members ±3mm
iii. Surface levels of slabs ±6mm

7.25.2. Any rectification of work not constructed within the tolerances set out above shall be entirely at the responsibility and expense of the Contractor.

8. BRICKWORK

8.1. COMPLIANCE WITH SPECIFICATION

8.1.1. All brickwork shall be carried out in accordance with BS EN 1996-1-2, BS EN 1996-2 and BS EN 1996-3.

8.2. BRICKS

8.2.1. Bricks shall be solid type, Class B, engineering, complying with the relevant provisions of BS EN 771 and BS EN 772.

8.2.2. The shapes and dimensions of special bricks shall comply with the relevant provisions of BS 4729.

8.3. CEMENT

8.3.1. Cement shall be sulphate resisting Portland Cement.

8.4. WATER

8.4.1. Water shall be as described in Clause 7.5.1.

8.5. ADMIXTURES

8.5.1. The only admixtures permitted are mortar plasticisers, which shall comply with the requirements of BS EN 934-3. They shall be supplied with instructions for use and be agreed with the Engineer in writing.

8.5.2. No other admixtures will be allowed without the Engineer's approval.

8.5.3. If used admixtures shall be chloride free.

8.6. SAND

8.6.1. Sand used for mortar and grout shall be naturally occurring to BS 13139. It shall be free from any deleterious substances.

8.7. LIME

8.7.1. Lime used in mortar shall be in the form of lime putty complying with the relevant provisions of BS EN 459-1.

8.8. MORTAR

8.8.1. Mortar shall be mixed only as and when required and in the proportions (by volume) given in the table below:-

Cement : lime : sand	1 : ¼ : 3
Cement : sand	1 : 3
Cement : sand with plasticiser	1 : 2½ : 3

8.8.2. Ready-mixed lime sand for mortar and ready-to-use retarded mortar shall comply with the relevant provisions of BS EN 998-2 and be of Category 1:12 and Designation (i) respectively.

8.8.3. Mortar shall be mixed in an approved batch mixer until its colour and consistency are uniform. Cement and lime shall be measured by weight. The quantities of sand for each batch shall be measured either by weight or volume in properly constructed and purpose made gauge boxes. In determining the volume of sand, due allowance shall be made for bulking.

8.9. CEMENTS AND GROUTS

8.9.1. Cement grout shall be thoroughly mixed with the minimum quality of water to ensure the necessary fluidity and to render it capable of penetrating the work. Grout shall be used within one hour of mixing.

8.9.2. Grouts shall be mixed in the relevant proportions indicated in the following table:

Class	Nominal Mix by Mass		
	Cement	Sand	Pfa
G1	1	-	-
G2	1	3	-
G3	1	10	-
G4	1	-	10

8.10. BRICKLAYING

8.10.1. Brickwork is to be constructed such that any four courses equal a vertical dimension of 300mm with The bond being carried up regularly.

8.10.2. Vertical joints and joints for relieving arches shall have a uniform thickness not exceeding 10mm. Bricks with single 'frogs' shall be laid 'frog' upwards.

8.10.3. Brickwork shall rise uniformly with corners and other advanced work being raked back and not raised above the general level by more than 1.0m. No bats or broken bricks shall be incorporated in the work unless essential for bond. No brickwork shall be carried up higher than 1.5m in any one day.

8.10.4. The moisture content of the bricks shall be adjusted so that excessive suction is not exerted on the mortar.

8.10.5. Oversail corbelling shall not exceed 30mm on each course.

8.11. BRICKLAYING IN COLD WEATHER

8.11.1. The mortar used should be suitable for use in cold weather, but in addition as protection against frost, newly erected brickwork shall be covered first with sacking and then with tarpaulins or other suitable waterproof covering, the ends sealed to prevent the ingress of wind.

8.11.2. All work shall be suspended when the temperature reached 4 degrees centigrade on a falling thermometer.

8.11.3. Any mortar damaged by frost shall be raked out and replaced, and if necessary damaged work demolished and rebuilt, all to the Architect's and Engineer's satisfaction.