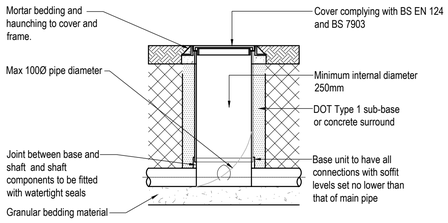

Note- Plastic chambers and rings shall comply with BS EN 13598-1 and BS EN 13598-2 or have equivalent independent approval

250mm Dia Inspection Chamber detail (Flexible Material Only)

Maximum depth from cover level to soffit of pipe 600mm, non entry

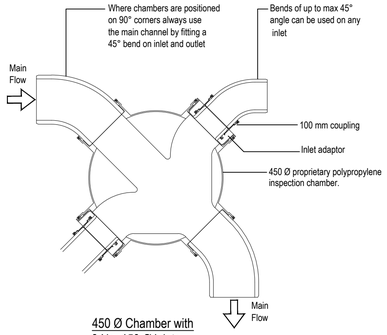

450 Ø Chamber with 3 No. 150 Ø inlets.

(2 No. adapted for 100Ø pipes.)

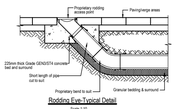

Rodding Eye-Typical Detail

Scale 1:10

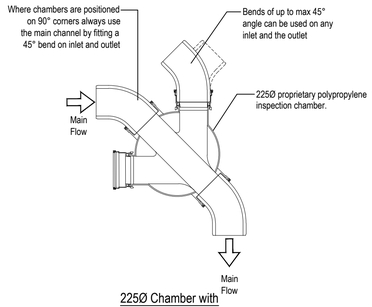

225Ø Chamber with 3No. 100Ø inlets.

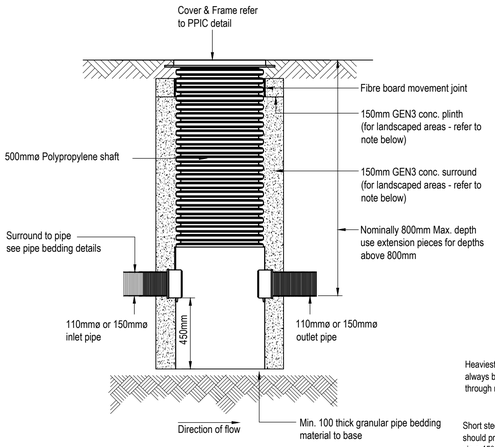

Preformed Silt Trap Chamber Detail (Catch Pit)

Wavin Osma Silt Trap 6LB600 or Similar Approved

(Scale 1:25)

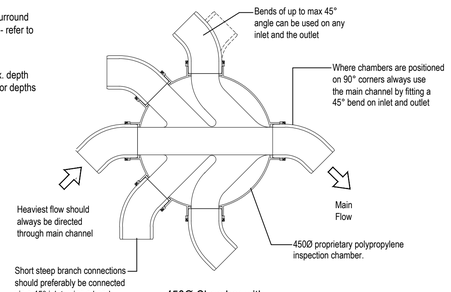

450Ø Chamber with 5 No. 100Ø inlets.

where necessary.

Polypropylene Inspection Chamber Typical Pipework Arrangements.

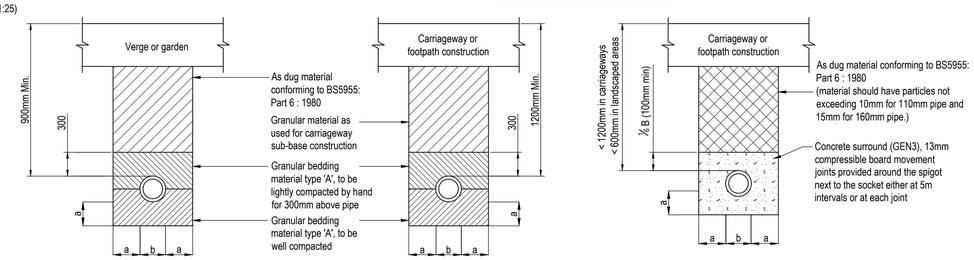

Note:
a= ⅓ but with a min. of 200mm around the barrels and a min. of 150mm around the sockets

Where pipes are within permeable paving, backfill is permeable stone as per typical road section.

Under Verge or Garden

(Bedding Class 'B')

Under Carriageway or Footway

(Bedding Class 'S')

Shallow Pipe Bedding Detail

(Bedding Class 'A')

Table 1 - Rocker Pipe Length

Nominal Diameter of Pipe (mm)	Effective Length (m)
150 to 600	0.6
600 to 750	1.0
700 and over	1.25

Compressible Filler and Packing for Pipelines

Nominal Diameter of Pipe (mm)	Thickness of Compressible Filler (mm)
Less than 450	18
450 - 1200	36
Exceeding 1200	54

Pipe Bedding Details

Scale: 1:25

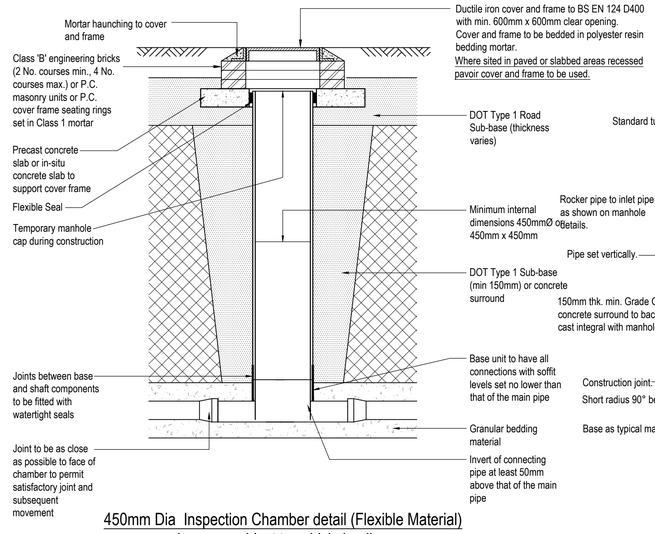

Scale 1:25

450mm Dia Inspection Chamber detail (Flexible Material) in areas subject to vehicle loading

Maximum depth from cover level to soffit of pipe in areas subject to vehicular loading 3m, non entry

Note- Plastic chambers and rings shall comply with BS EN 13598-1 and BS EN 13598-2 or have equivalent independent approval

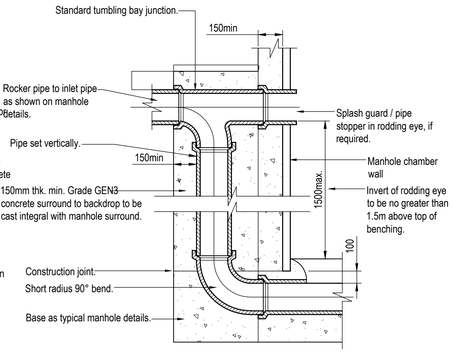

Typical Backdrop Detail

Scale: 1:25

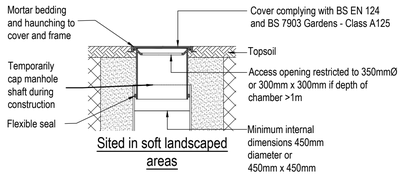

Sited in soft landscaped areas

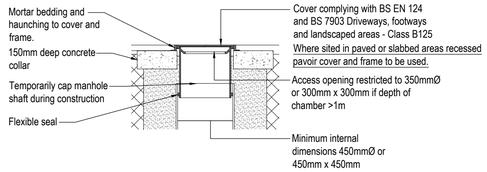

450mm Dia Inspection Chamber detail (Flexible Material) for light vehicle loading and landscaped areas

Scale 1:25

Maximum depth from cover level to soffit of pipe in areas subject to vehicular loading 3m, non entry

Pipe Bedding Material Details

1. Material designated type 'A' shall consist of angular gravel or crushed rock graded in accordance with BS EN 12620:2002 or air cooled blast furnace slag to A1:2008, or sintered pulverised fuel ash to BS EN 130511:2002, selected according to pipe size as follows:-

Nominal Size of Pipes (mm)	Maximum Particle Size (mm)	Imported Granular Materials
100	10	10mm nominal single-size
Over 100 to 150	15	10 or 14mm nominal single-size or 14mm to 5mm graded
Over 150 to 300	20	10, 14 or 20mm nominal single-size or 14mm to 5mm graded or 20mm to 5mm graded
Over 300 to 600	20	14 or 20mm nominal single-size or 14mm to 5mm graded or 20mm to 5mm graded
Over 600	40	14, 20 or 40mm single-size or 14mm to 5mm graded or 20mm to 5mm graded or 40mm to 5mm graded

2. Material designated type 'B' used under gardens and verges shall consist of uniform readily compactable material, free from tree roots, vegetable matter, building rubbish and frozen soil, and excluding clay lumps retained on a 75mm sieve and stones larger than 37mm. Bedding to be compacted in 225mm layers.
3. Material designated type 'B' used under roads and footpaths shall consist of granular material as used for carriageway sub-base construction.

Note:
At each flexible pipe joint a joint filler (e.g. fibreboard or polystyrene) shall be used (see table below), and shall extend through the full thickness of any concrete in contact with the pipe. The concrete bed shall be cut away at each joint to give a clearance of at least 50mm, so that the joint does not bear on the bed.

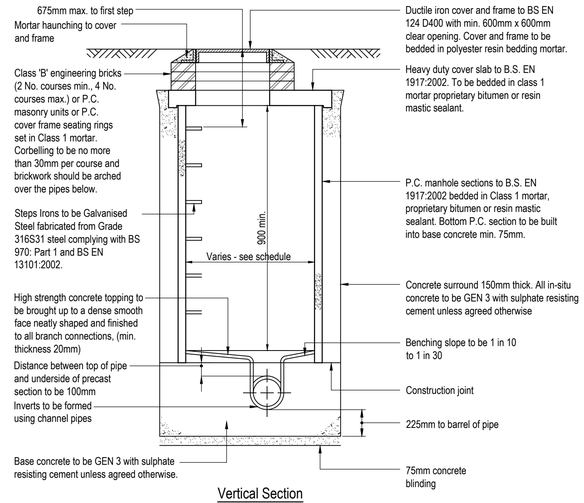

Vertical Section

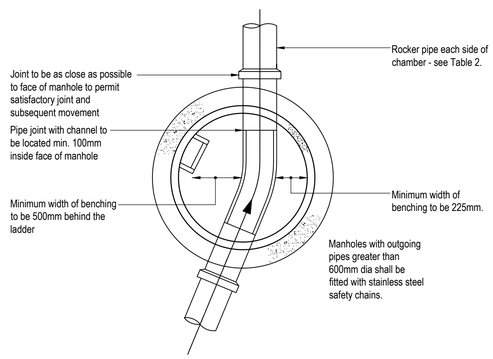

Plan Section

Typical Manhole Detail - Type B

Max. depth from ground level to soffit of pipe 3.0m

Scale: 1:25

General Notes

1. Where this drawing has been issued in electronic .dwg format it has been done so in good faith. jnpgroup do not take any responsibility for any inaccuracies in the electronic data, which should be checked against the paper (or .pdf) drawing issue. Any apparent discrepancies should be immediately reported to jnpgroup. The electronic .dwg file should not be assumed to be to scale and should not be used for 'overlaying', setting out or checking of any third party information. All dimensions should be taken from the paper (or .pdf) version of the drawing. Electronic drawings may contain third party information. jnpgroup take no responsibility for this information, which should be checked against the originators paper drawing(s).
2. All working dimensions to be checked on site.
3. Do not scale.
4. Any discrepancies between drawings of different scales, and between drawings and specification where appropriate to be notified to The Engineer for decision.
5. Copyright reserved. This drawing may only be used for The Client and location specified in the title block. It may not be copied or disclosed to any third party without the prior written consent of jnpgroup.
6. This drawing should only be used for construction if the drawing status is "Construction". jnpgroup take no responsibility for construction works undertaken to drawings which are not marked with this status.

Health & Safety Note

The details on this drawing have been prepared on the assumption that a competent contractor will be carrying out the works. If the contractor(s) considers that there is insufficient Health and Safety information on this drawing, this should immediately be brought to the attention of the designer.

Rev.	Date	Description	Drn / Chk'd / App'd

Suitability:

S4 - Suitable for Stage Approval

JNP GROUP
CONSULTING ENGINEERS

Chesham ● Brighouse ● Glasgow ● Hartlepool
Leamington Spa ● Sheffield

www.jnpgroup.co.uk

Client:

Ganatra

Job:

Telcote Way, Ruislip

Title:

Proposed Drainage Construction Details

Classification: FI_60_20

Scale @ A1: As Shown

Accredited Contractor

Supplier No 506076

Project - Originator - Volume/System - Level/Location - Type - Discipline - Number: C86290-JNP-XX-92-DR-C-0002

Revision: -

Document/Drawing Number

Complies to ISO7200:2004 – JNP QA Ref: QD019 Rev F

© Copyright JNP Group Ltd.2018

JNP Group Internal Project Number: H01234