NOTES:

1. INSPECTION CHAMBER COVERS AND FRAMES AS FOLLOWS:-

BRICKWORK AND PRE-CAST CONCRETE -

i) PRIVATE DRIVES AND VERGES ACCEPTING VEHICLE TRAFFIC: BS EN124 CLASS B125, 600mm CLEAR OPENING, SOLID TOP COVER AND FRAME.
ii) FOOTPATHS AND GARDENS WITHOUT TRAFFIC: BS EN124 CLASS A15, 600mm CLEAR OPENING, SOLID TOP COVER AND FRAME.

POLYPROPYLENE

iii) AREAS ACCEPTING VEHICLE TRAFFIC: CLASS B
iv) SOFT LANDSCAPED AREAS: CLASS C

2. MORTAR HAUNCHING TO INSPECTION CHAMBER AND FRAMES.

3. i) FOR USE WITH BRICK INSPECTION CHAMBERS IN NON ADOPTED ROADS, PRIVATE DRIVES, FOOTWAYS AND VERGES; HEAVY DUTY (150mm NOMINAL THICKNESS) PRECAST REINFORCED CONCRETE COVER SLAB TO BS 5911, BEDDED ON 10mm THICK MORTAR BED; OR 150mm GRADE C25P INSITU CONCRETE (REINFORCED WITH A393 MESH TO BS 4483) COVER SLAB.
OTHER LOCATIONS INACCESSIBLE TO VEHICLES;
LIGHT DUTY (75mm NOMINAL THICKNESS) PRECAST REINFORCED CONCRETE COVER SLAB TO BS 5911, BEDDED ON 10mm THICK MORTAR BED; OR 100mm GRADE C25P INSITU CONCRETE (REINFORCED WITH A193 MESH TO BS 4483) COVER SLAB.

ii) FOR USE WITH PRECAST CONCRETE INSPECTION CHAMBERS IN NON ADOPTED ROADS, PRIVATE DRIVES, FOOTWAYS AND VERGES; HEAVY DUTY (150mm NOMINAL THICKNESS) PRECAST REINFORCED CONCRETE COVER SLAB TO BS 5911, OF SIZE AND TYPE TO SUIT CHAMBER SECTIONS.

OTHER LOCATIONS INACCESSIBLE TO VEHICLES:
LIGHT DUTY (75mm NOMINAL THICKNESS) PRECAST REINFORCED CONCRETE COVER SLAB TO BS 5911, OF SIZE AND TYPE TO SUIT CHAMBER SECTIONS.

4. WITH PRECAST OR BRICK INSPECTION CHAMBERS, COVER SLABS WITH A CLEAR OPENING OF 600x600mm ARE REQUIRED. OFFSET TO SUIT CHOSEN FACE FOR STEP RUNGS.

5. 215mm THICK WALLS IN CLASS B ENGINEERING BRICKS TO BS 3921 LAYERED IN ENGLISH BOND WITH FROGS UP. INNER FACES TO BE PLUMB AND IN TRUE ALIGNMENT. BRICK COURSE TO BE LEVEL. FLUSH JOINTING TO BRICKWORK INNER FACES AND PRECAST CONCRETE CHAMBER SECTIONS TO BS 5911.

6. ALL STEP RUNGS TO BS 1247

i) GENERAL PURPOSE PATTERN (WITH 230mm TAIL) TO BE BUILT INTO CHAMBER WALL OF BRICK INSPECTION CHAMBERS.

ii) PRECAST CONCRETE MANHOLE PATTERN "LET IN" TO CHAMBER WALL OF PRECAST INSPECTION CHAMBERS. ALL STEP RUNGS TO BE HORIZONTALLY AND VERTICALLY STAGGERED AS SHOWN ON SECTION X-X. STEP RUNGS ARE NOT REQUIRED TO EITHER TYPE OF INSPECTION CHAMBER WHERE DEPTH TO SOFFIT IS LESS THAN 750mm.

7. MASS CONCRETE INFILL.

8. BENCHING TO RISE VERTICALLY FROM EDGES OF CHANNEL TO A HEIGHT NOT LESS THAN PIPE (FULL SECTION) SOFFIT LEVEL. STEEL FLOAT SMOOTH HARD SURFACE WITH CEMENT MORTAR 1:1 MIX, 25mm THICK.

9. 50mm MIN.THICK MORTAR BED TO HALF ROUND CHANNELS.

10. 150mm MIN. THICK MASS CONCRETE BASE SLAB (GRADE C20P) TO PRECAST, uPVC AND BRICK TYPES OF INSPECTION CHAMBER.

11. 75mm THICK LEAN MIX CONCRETE BLINDING.

12. MINIMUM OF 2, AND MAXIMUM OF 4 COURSES OF 215mm THICK ENGINEERING BRICKS (CLASS B) TO UNDERSIDE OF COVER & FRAME, BUILT OFF COVER SLAB, MAY BE REQUIRED TO FACILITATE ROAD OR DRIVE CONSTRUCTION.

13. A BRICK RELIEVING ARCH SHALL BE TURNED OVER ALL PIPES WHERE THEY PASS THROUGH THE WALLS OF A BRICK INSPECTION CHAMBER.

14. PIPES ENTERING INSPECTION CHAMBERS SHALL HAVE A FLEXIBLE JOINT WITHIN 150mm OF THE OUTER FACE OF THE BRICKWORK OR CONCRETE SURROUND.

15. CHANNEL JUNCTIONS WITHIN BRICK OR PRECAST CONCRETE INSPECTION CHAMBERS TO BE HALF ROUND CHANNEL SECTIONS.

16. BACKFILL MATERIAL TO BE AS DETAILED ABOVE FOR NORMAL PIPE BEDDING.

17. FOLLOWING THE FLEXIBLE JOINT FROM EITHER A PRECAST OR BRICK INSPECTION CHAMBER (NOTE 14 ABOVE) A 'ROCKER' PIPE OF 600mm LENGTH SHALL BE INSTALLED.

18. PRECAST CONCRETE INSPECTION CHAMBERS MAY (IF CHOSEN FOR USE) HAVE A PURPOSE MADE BASE UNITS.

19. WHERE PRECAST CONCRETE INSPECTION CHAMBERS ARE CONSTRUCTED WHOLLY ABOVE THE WATER TABLE, JOINTS ARE TO BE SEALED WITH MORTAR. IN WATERLOGGED GROUND OR WHERE THE WATER TABLE IS ABOVE THE BASE SLAB, JOINTS ARE TO BE WATER TIGHT USING A MASTIC SEALANT OR RUBBER RINGS OF A TYPE SUITABLE TO THE CHAMBER UNITS.

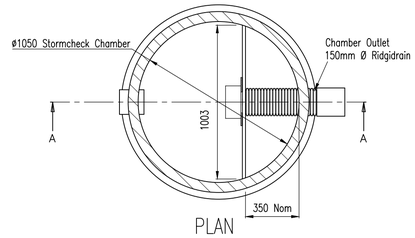

STORMCHECK FLOW CONTROL CHAMBER
SCALE 1:20

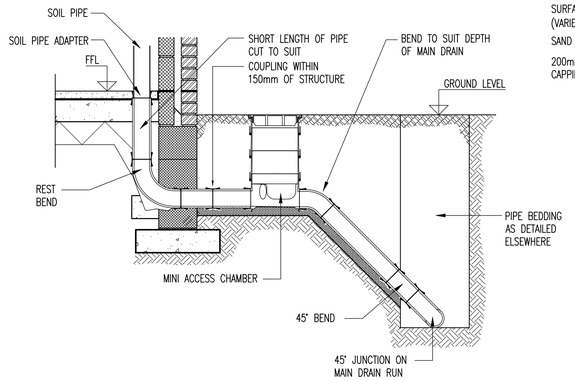

ACCESS CHAMBER CONNECTION TO MAIN DRAIN RUN
SCALE 1:20

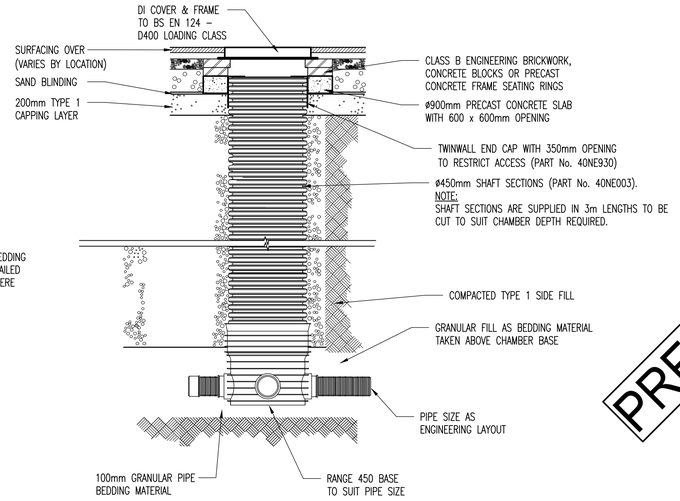

WAVIN RANGE 450 INSPECTION CHAMBER >1200 DEPTH (TRAFFICKED AREAS)
UP TO ø150mm PIPEWORK - MAX 3m DEPTH
SCALE 1:20

PRELIMINARY

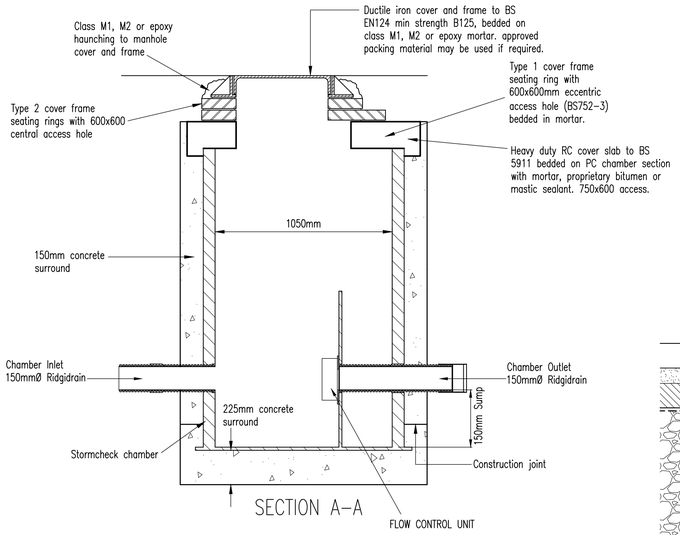

STORMCHECK FLOW CONTROL CHAMBER
SCALE 1:20

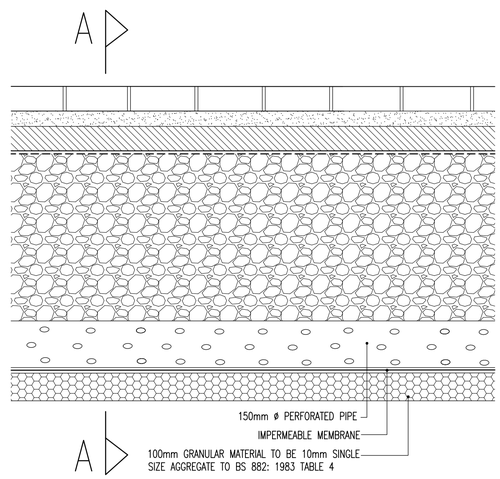

PERFORATED PIPE SECTION
SCALE 1:10

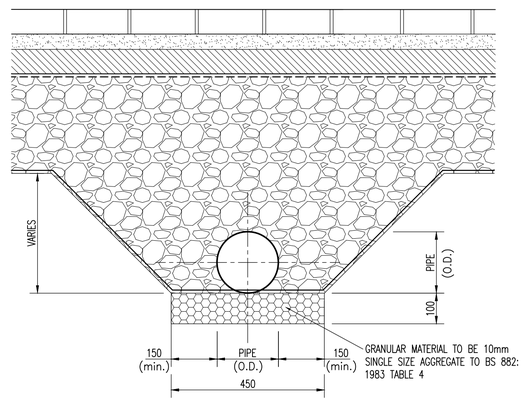

PERFORATED PIPE SECTION A-A
SCALE 1:10

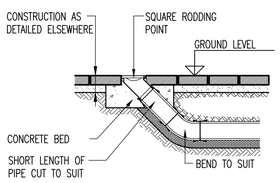

RODDING POINT
SCALE 1:25

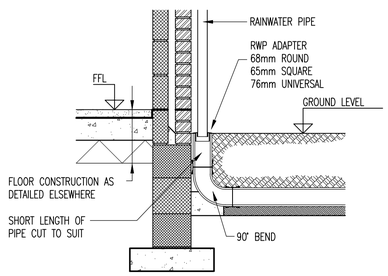

EXTERNAL RWP CONNECTION
SCALE 1:25

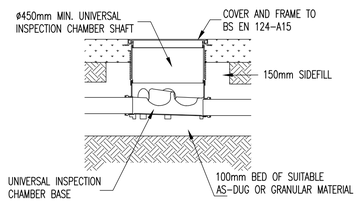

INSPECTION CHAMBER, 600-1200mm DEPTH (NON-TRAFFICKED AREAS)
SCALE 1:25

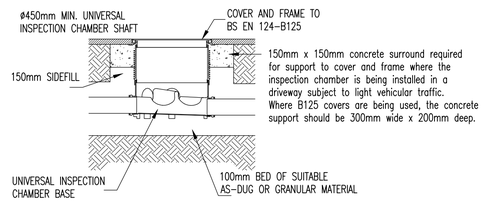

INSPECTION CHAMBER, 600-1200mm DEPTH (TRAFFICKED AREAS)
SCALE 1:25

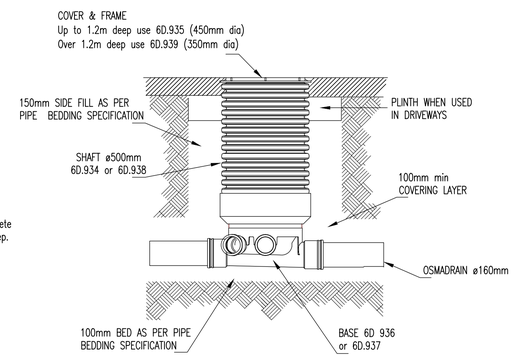

OSMA INSPECTION CHAMBER, >1200mm DEPTH (NON-TRAFICKED AREAS)
SCALE 1:20

Rev	Amendments	Drawn	Approved	Date

jms CIVIL & STRUCTURAL CONSULTING ENGINEERS
LONDON • MIDLANDS • EAST ANGLIA • MANCHESTER • GREECE

- JMS London: 150 Minories, City of London EC3N 1LS Tel: 0207 347 3239
- JMS East Anglia: Unit 10 Brightwell Barns, Waldringfield Road, Suffolk IP10 0BJ Tel: 01473 487230
- JMS Chelmsford: BIC110 - The MedBIC, Alan Cherry Drive, Chelmsford, Essex CM1 1SQ Tel: 01245 905886
- JMS Midlands: Victoria Court, Tennant Street, Nuneaton, Warwickshire CV11 4LZ , Tel: 02476 355926
- JMS Manchester: 79 Thomas Street, Manchester M4 1LQ Tel: 0161 883 2909
- JMS Greece: 27 Arapitsas Street, Sykies, Thessaloniki 56626 Greece Tel: 0030 2310 960636

Project
11A CRESCENT PARADE, HILLINGDON

Drawing Title
DRAINAGE DETAILS (SHEET 1 OF 2)

Client
HIGH GRADE PROPERTIES LTD

Drawn by	Designed by
JB	JB
Approved by	**Checked by**
BN	BN
Scale	**Date**
AS SHOWN	NOVEMBER 2017

Drawing No. L17_139_08_002 — Rev.

ORIGINAL SHEET SIZE A1