217 High Street, Yiewsley

Response to London Borough of Hillingdon and Transport for London Comments

On behalf of **Taylor Wimpey West London**

Project Ref: 46187/5501 | Rev: B | Date: July 2020

Registered Office: Buckingham Court Kingsmead Business Park, London Road, High Wycombe, Buckinghamshire, HP11 1JU
Office Address: Caversham Bridge House, Waterman Place, Reading, Berkshire RG1 8DN
T: +44 (0)118 950 0761 E: PBA.Reading@stantec.com

Document Control Sheet

Project Name: **217 High Street, Yiewsley**

Project Ref: **46178**

Report Title: **Response to London Borough of Hillingdon and Transport for London Comments**

Doc Ref: **5501/003**

Date: **July 2020**

	Name	Position	Signature	Date
Prepared by:	Ellen Few	Transport Planner	EF	11/06/2020
Reviewed by:	Ben Taylor	Associate	BT	11/06/2020
Approved by:	Phil Brady	Director	PB	11/06/2020
For and on behalf of Stantec UK Limited				

Revision	Date	Description	Prepared	Reviewed	Approved
A	11/06/2020	Draft	EF	BT	PB
B	01/07/2020	Final	EF	BT	PB

This report has been prepared by Stantec UK Limited ('Stantec') on behalf of its client to whom this report is addressed ('Client') in connection with the project described in this report and takes into account the Client's particular instructions and requirements. This report was prepared in accordance with the professional services appointment under which Stantec was appointed by its Client. This report is not intended for and should not be relied on by any third party (i.e. parties other than the Client). Stantec accepts no duty or responsibility (including in negligence) to any party other than the Client and disclaims all liability of any nature whatsoever to any such party in respect of this report.

Contents

1 Introduction 2
1.1 Preamble 2
2 London Borough of Hillingdon Comments and Responses 3
2.1 Introduction 3
2.2 Committed Developments 3
2.3 Car Parking 6
2.4 Local Highway Network 8
2.5 Healthy Streets 9
3 Transport for London Comments and Responses 11
3.1 Introduction 11
3.2 Walking and Cycling 11
3.3 Access Arrangements 12
3.4 Car Parking 13
3.5 Cycle Parking 14
3.6 Trip Generation 14
3.7 Delivery and Servicing Plan (DSP) 16

Figures

Photo 1: A408 Falling Lane / Goring Road Junction 8

Tables

Table 2.1: Site Access Junction Assessment Results 5
Table 2.2: Tesco Access Junction Assessment results 5
Table 2.3: A408 / Falling Lane / Trout Road Junction Assessment results 6
Table 3.1: Total Multi – Modal Trip Generation 15
Table 3.2: Health Facility Bus Trips Net Impact Assessment 15
Table 3.3: Total Bus Trips 15

Appendices

Appendix A LBH and TfL Comments
Appendix B Committed Development Traffic Flows
Appendix C Junctions 9 and LINSIG Outputs
Appendix D Enterprise Car Club Letter
Appendix E Apollo Medical Letter

Appendix F Queue Length Data
Appendix G TFL Correspondence
Appendix H Layout Plan
Appendix I Swept Path Analysis – Servicing Vehicles
Appendix J Swept Path Analysis – Car Parking
Appendix K Trip Rates
Appendix L Delivery and Servicing Plan

This page is intentionally blank

1 Introduction

1.1 Preamble

1.1.1 Stantec have been commissioned by Taylor Wimpey West London (TWWL) to provide Highways and Transport advice in support of the development proposals at 217 High Street, Yiewsley, UB7 7GN (*Planning Application Ref:68663/APP/2020/705)*. The proposed development comprises of 235 residential dwellings and a 10,000sqft D1 health facility. A Transport Assessment (TA) and Framework Travel Plan (FTP) were prepared to support the application. An Outline Delivery and Servicing Plan, Car Parking Management Plan and Construction and Logistics Plan were also included within the Transport Assessment.

1.1.2 Following on from design comments received from the London Borough of Hillingdon (LBH) on 25 June 2020 the number of dwellings on the site have been reduced from 235 to 233. This small reduction will not result in a material change to the findings of the TA submitted as part of the planning application.

1.1.3 This report response to the comments received on the planning application from LBH and Transport for London (TfL) on highways and transport matters in relation to the development proposals. LBH and TfL comments, dated 29 May 2020 and 21 May 2020 respectively are included in **Appendix A** for ease of reference.

1.1.4 The remainder of the report is structured as follows:

- Section 2 – provides a response to the queries which have been raised by LBH; and
- Section 3 – provides a response to the comments which have been raised by TfL.

2 London Borough of Hillingdon Comments and Responses

2.1 Introduction

2.1.1 This section of the report responses to the comments received from London Borough of Hillingdon on the highway and transport matters of the planning application.

2.2 Committed Developments

LBH Comment 1

"The network has been assessed as of 2019 to provide a baseline, in 2025 with the application site in its extant use and in 2025 with the proposed development. 2025 has been chosen as the future year as this is when the development is planned to open. For both 2025 future options, extant use and the proposed use, road traffic growth has been factored in. However, the Highway Authority notes that the applicant has failed to include in these assessments committed developments nearby, these should be included as these too will load extra traffic on the network and must be taken into account."

Response

2.2.1 The traffic assessment has been updated to include the following committed developments within the local area, the inclusion of which has been agreed with LBH:

- Comag, Tavistock Road – 24843/APP/2018/269 – 104 dwellings;
- Bentinck Road and Tavistock Road – 45200/APP/2017/327 – 315 dwellings;
- Horton Road – 71582/APP/2016/4582 / 71582/APP/2018/ 2871 – 86 dwellings.

2.2.2 These sites are all allocated within the Hillingdon Local Plan Part 2 (adopted January 2020), and thus theoretically within the background TEMPRO growth accounted for within the assessments in the TA. However, for a robust assessment no adjustments have been made to the TEMPRO growth rates and traffic generated from the committed development sites have been added on top.

2.2.3 The trip generation and distribution of the committed developments has been derived from the respective Transport Assessments. It is understood that in July 2019 when traffic surveys were undertake, none of the extant consents on the sites were fully operational so therefore would not have been reflected in the survey data. The full trip generation of the proposals at each site has been included in this assessment not the net changes, which in some cases reflect a net reduction in vehicle trips from the previous use. The trip generation of the sites has been distributed accordingly to the network. The methodology used for each site has been set out below:

- Comag, Tavistock Road – The forecast trip generation set out in Table 6.5 of the respective TA was used. The distribution of the future traffic at the junction of Tavistock Road appended to the TA was used to distribute the traffic to the network. This forecast 65% of traffic would travel south, whist 35% would travel north. This equates to 3 vehicles travelling through the assessment network during the AM Peak Hour and 4 vehicles during the PM peak hour.
- Bentinck Road and Tavistock Road – The forecast trip generation set out in Table 1.6 of the Transport Technical Note Addendum (WSP) was used. This was distributed onto the

network using the traffic flows diagrams appended to the original TA. This forecast 26% of traffic heading north / south from the development along High Street past the junction with Horton Road. 26% of the traffic equates to 19 vehicles during the AM and PM Peak hours which have be added to the assessment network.

- Horton Road – The proposed development traffic flows have been derived from Table 4 of the associated TA. No distribution was included with the TA but due to the similar location to the Comag site the same distribution assumptions have been applied, with 65% of traffic heading south and 35% of traffic heading north. In the AM Peak hour, the site was forecast to generate 16 two-way trips so on this basis, 6 vehicles and have been assigned to the assessment network. The same methodology has been applied for the PM Peak hour.

2.2.4 The committed development sites are located approximately 800m to the south of the site near West Drayton railway station. Most of the traffic from the sites heads south and therefore does not enter the assessment network. Of the traffic heading north, it is likely that some vehicle trips will enter / depart the highway network along the High Street prior to reaching the junction with Falling Lane. However, for a robust assessment all traffic heading to the north along High Street has been assumed to remain on the assessment network and travel through the High Street /Falling Lane junction. The traffic flows have been distributed at the junction based on existing turning proportions from the 2019 surveys, with 75% travelling north along High Street whilst the remainder 25% using Falling Lane to enter/ depart the network. Of the traffic continuing along High Street, 100% of the traffic remains on the High Street through both the Tesco Access and Site Access junctions. The committed development traffic flows are presented in **Appendix B**.

2.2.5 The operational junction assessments in the TA have been updated to include the committed developments above and the result are set out in Tables 2.1 -2.3 below. The full outputs are provided in **Appendix C**.

Table 2.1: Site Access Junction Assessment Results

	AM Peak Hour (0800-0900)			PM Peak Hour (1700-1800)		
	RFC	Delay s/pcu	Queue pcu	RFC	Delay s/pcu	Queue pcu
2019 Baseline						
Site Access	0.04	14.15	0.1	0.26	15.57	0.4
A4098 High Street	0.02	7.87	0.0	0.07	7.77	0.1
2025 Future Year with Committed Development and Extant Use						
Site Access	0.04	15.23	0.1	0.28	17.21	0.4
A4098 High Street	0.02	8.10	0.0	0.07	8.00	0.1
2025 Future Year with Committed Development and Proposed Development						
Site Access	0.13	13.24	0.1	0.12	13.98	0.1
A4098 High Street	0.03	7.42	0.0	0.04	7.81	0.0

Source: Junctions 9

Table 2.2: Tesco Access Junction Assessment results

	AM Peak Hour (0800-0900)			PM Peak Hour (1700-1800)		
	DOS	Average Delay s/pcu	Queue pcu	DOS	Average Delay s/pcu	Queue pcu
2019 Baseline						
Tesco Access	39.3%	45.2	1.7	74.5%	51.4	6.6
A4098 High Street N	49.0%	11.7	8.2	50.4%	15.2	8.7
A4098 High Street S	43.1%	14.7	7.0	45.5%	13.9	7.5
2025 Future Year with Committed Development and Extant Use						
Tesco Access	42.2%	45.8	1.9	69.4%	44.2	6.6
A4098 High Street N	52.5%	12.2	9.2	57.0%	18.2	10.3
A4098 High Street S	46.5%	15.1	7.7	50.5%	15.8	8.7
2025 Future Year with Committed Development and Proposed Development						
Tesco Access	42.2%	45.8	1.9	69.4%	44.2	6.6
A4098 High Street N	53.3%	12.3	9.3	55.6%	17.9	9.9
A4098 High Street S	46.9%	15.2	7.5	50.2%	15.7	8.7

Source: LinSig

Table 2.3: A408 / Falling Lane / Trout Road Junction Assessment results

	AM Peak Hour (0800-0900)			PM Peak Hour (1700-1800)		
	DOS	Average Delay s/pcu	Queue pcu	DOS	Average Delay s/pcu	Queue pcu
2019 Baseline						
A408 High Street N	61.2%	52.4	6.4	57.2%	45.0	7.1
Falling Lane	62.5%	33.9	7.3	67.7%	36.4	8.5
A408 High Street S	53.9%	34.7	5.4	52.7%	30.7	6.3
Trout Road	59.0%	58.3	4.9	70.8%	75.8	4.9
2025 Future Year with Committed Development and Extant Use						
A408 High Street N	65.9%	54.5	7.0	69.3%	53.5	8.3
Falling Lane	66.2%	34.9	8.1	68.1%	34.8	8.8
A408 High Street S	58.7%	35.8	6.4	61.0%	35.2	7.8
Trout Road	62.9%	60.1	5.3	68.8%	70.8	5.0
2025 Future Year with Committed Development and Proposed Development						
A408 High Street N	67.0%	55.1	7.2	68.2%	53.0	8.0
Falling Lane	65.9%	34.0	8.2	69.2%	35.2	9.2
A408 High Street S	58.7%	35.8	6.4	59.8%	34.8	7.4
Trout Road	66.9%	64.6	5.4	67.7%	70.0	4.9

Source: LinSig

2.2.6 The results set out above demonstrate that the junctions still operate with substantial capacity with the addition of the committed developments requested by LBH.

2.2.7 There are marginal differences to the operation of the Falling Lane / High Street signal junction in the future year when comparing the extant use with the proposed development scenario. Overall, there is a slight betterment to the operation of the signal junction during the PM Peak Hour.

2.3 Car Parking

LBH Comment 2

2.3.1 *"The Hillingdon Local Plan: Part 2 Development Management Policies (2020) Policy DMT 6: Vehicle Parking requires that development proposals must comply with the relevant parking standards. For a development of this type the maximum number of parking spaces permitted is 256. As mentioned above 179 spaces are proposed representing a ratio of 0.76 spaces per unit. This ratio is less than the nearby consented sites at Comag, Tavistock Road, Yiewsley (Reference 24843/APP/2018/269) which had 104 units and 104 parking spaces representing a ratio 1 space per unit. Closer to the application site is the land rear of 2 - 24 Horton Road (Reference 71582/APP/2018/2871), this has 86 units and 75 parking spaces representing a ratio 0.87 spaces per unit. Compared to the application site the site on land rear of 2 - 24 Horton Road development has a higher PTAL ranking of 3. Furthermore it comprises of only 1 and 2 bed units, the occupiers of this type of property generally have less car parking demand than that of 3 or 4 bed family units where each adult may own a car and need somewhere to park. Applying the consented Horton Road site car parking ratio of 0.87 to the application site would indicate that 204 car parking spaces are required, as only 179 residential spaces are proposed there is a shortfall of around 25 residential car parking spaces."*

Response

2.3.2 Having considered both comments from LBH and TfL regarding the parking provision we note that they respectively request increases and decreases in car parking. On reflection we consider the proposed provision represents an appropriate level of parking considering the sustainable location of the development whilst providing adequate parking to meet the need of future residents of the site.

2.3.3 There are now no visitor car parking bays for the residential units. It is now proposed to provide an additional 2 car club spaces on the site allocating a total of 4 spaces to the car club. This provides a benefit to the future residents and local community reducing the necessity for individuals to own a car. Enterprise Car Club have expressed their interest in the scheme and occupying all 4 of the car club spaces. The letter is provided in **Appendix D.**

2.3.4 The Car Club Annual Survey, London 2017/18 undertaken by Steer on behalf of CoMoUK stated that car clubs have resulted in 100,000 deferred car purchases and an additional 42,000 car free households across Greater London in the12 months period. In addition, more than half of all car club members are less likely to purchase a private vehicle over the next few years.[1] On this basis, the provision of the 4 car club cars on the site will reduce the need for future residents to own a private vehicle.

2.3.5 Each car club space typically equates to 8 privately owned vehicles[2], and with the provision of 4 car club spaces on the site is the equivalent of an additional 32 spaces. Taking this into consideration the site provides for 213 spaces and a ratio of 0.91 for the residential units.

LBH Comment 3

2.3.6 *"The Hillingdon Local Plan: Part 2 Development Management Policies (2020) Policy DMT 6: Vehicle Parking requires that for Medical and other Healthcare Practices that at least 2 car parking spaces are provided for each of the 12 consulting rooms, 24 in total. As mentioned above the D1 Heath Facility would have 20 spaces this represents a shortfall of 4 spaces."*

Response

2.3.7 The health facility is proposed to have 20 car parking spaces. This quantum of spaces has been provided in accordance with a similar scheme within the London Borough of Hillingdon at Drayton Garden Village (*Planning Ref: 5107/APP/2009/2348*). 19 spaces were provided for a health centre of 11,679sqft which was deemed acceptable by the authorities which is of a comparable size to the health facility to be provided. In addition, Apollo Medical have been consulted on behalf of the future occupiers, the Clinic Commissioning Group (CCG) of the NHS and have confirmed that 20 parking spaces will be sufficient for the operation of the health facility for both staff and patients. Correspondence to this effect is provided at **Appendix E**.

[1], CoMoUK (2019) *Car Club Annual Survey for London 2017/2018*

[2] Greater London Authority (2016) *The London Plan*

2.4 Local Highway Network

LBH Comment 4

2.4.1 "*Notwithstanding the above the signalised junctions of A408 High Street/Falling Lane/Trout Road is already at capacity during peak periods giving rise to vehicles queuing presenting risks to the road safety of vulnerable road users. This queuing traffic leads to bus services being delayed, making them less attractive to the user. According to the applicant these bus services are one of reasons why the site is in a sustainable location and why the quantum of car parking proposed is acceptable.*"

Response

2.4.2 On site observations of local junctions have been undertaken on multiple occasions including on 23 April 2019. During the AM Peak Hour observations, no material operational issues were observed at either junction. Traffic on all arms of the junctions was observed to clear within a single cycle.

2.4.3 There was a short period of sustained queueing observed on the A408 High Road arm of the junction with Falling Lane / High Street / Trout Road. This was due to queuing traffic on the filter lane to Falling Lane. It was apparent that traffic was queuing in this location due to slow moving traffic eastbound on Falling Lane, resulting from vehicles accessing and egressing the Falling Lane / Gordon Road junction and pedestrians using the crossing immediately east of the junction, as shown in Photo 1 below. The vehicle and pedestrian movements were associated with Rabbsfarm Primary School on Gordon Road and the traffic impacts on A408 High Road were brief, lasting approximately 10 minutes.

Photo 1: A408 Falling Lane / Goring Road Junction – Rolling queue towards A408 High Street



2.4.4 In addition, traffic surveys were undertaken by MHC Traffic Ltd on 11 July 2019 including turning counts and queue length surveys. The queue length surveys were undertaken for every 1-minute period across the peak hours and is included in **Appendix F**. The data clearly shows that there are no sustained periods where the queues are the same length and in the majority of cases vary from minute to minute to match the cycle of the traffic lights.

2.4.5 In line with the above observations, the validated LINSIG modelling undertaken as part of the TA does not demonstrate any operational issues with the junction and significant queuing is not forecast on any arm of the junction during the future year with the development traffic. The distance between the stop line and Tesco junction is approximately 90m, and on the basis that 1 vehicle is the equivalent of 6 PCUs a queue of 15 vehicles would result in blocking the junction. The maximum queue recorded on the northern arm of the High Street based on the LINSIG modelling is 8 PCUs during the PM Peak Hour and therefore not forecast to extend and block the Tesco junction. On the basis on the above results there is no evidence to suggest that mitigation is required to improve capacity at these junctions.

2.4.6 Based on the on-site observations, available survey data and baselines and forecast junction modelling, it is considered that the junction is not operating at or over capacity, and that the addition of traffic from the proposed development will not have a material impact on junction operation, given that there is only a marginal difference in the assessment results when compared with the extant consent remaining operational.

2.4.7 It is considered that the operation of the junction is not a serious constraint to the efficient operation of bus services, and that bus priority measures would be of little benefit in the one brief observed period of extended queuing during school drop-off.

LBH Comment 5

2.4.8 *"Furthermore, it has been identified that cyclists proceeding southbound along the High Street over this junction are at risk of being hit be a vehicle turning left into Falling Lane. The Highway Authority requires a developer contribution to fund bus priority measures at this junction as well as works to improve road safety and capacity"*

Response

2.4.9 Personal Injury Collision (PIC) data has been obtained from TfL for the most recently available five-year period to review the safety of the local highway network within the vicinity of the site. The 60-month period covered the dates between May 2014 to May 2019. During this time only one accident including a cyclist has been recorded at the junction travelling northbound on the High Street. Therefore, there are no trends or patterns to suggest a safety issue for cyclists using the junction and to justify the need for improvements.

2.4.10 Comments regarding bus priority and junction capacity are addressed in response to Comment 4 above.

2.5 Healthy Streets

LBH Comment 6

2.5.1 *"To improve access to Yiewsley town centre a contribution is required for investment in 'Healthy Streets'. The 'Healthy Street' approach focuses on creating streets that are pleasant, safe and attractive, where noise, air pollution, accessibility and lack of seating and shelter are not barriers that prevent people - particularly our most vulnerable people - from getting out and about."*

Response

2.5.2 In light of the COVID -19 Pandemic, a site visit required to carry out an Active Travel Zone assessment cannot presently be undertaken. Further to discussions with TfL, agreement has been sought that this can be conditioned in light of the current circumstances. The correspondence is provided at **Appendix G**.

2.5.3 A comprehensive Active Travel Zone (ATZ) assessment will be carried out to discharge the condition and review accessibility of key routes to local facilities and identify the suitability of the local walking and cycling network, at a time when a site visit can be safely undertaken.

3 Transport for London Comments and Responses

3.1 Introduction

3.1.1 This section of the report responses to the comments received from Transport for London on the highway and transport matters of the planning application.

3.2 Walking and Cycling

TfL Comment 1

3.2.1 *"the development site is car-dominated with excessive parking provision, and therefore the proposals do not accord with Intend to Publish (ItP) London Plan Policy T2 – Healthy Streets. The car park between the residential building and the health facility, providing access to the residential entrances, is not considered suitable for pedestrians and cyclists."*

Response

3.2.2 The layout for the scheme has been amended to provide designated facilities for pedestrians and cyclists. The updated layout is provided at **Appendix H**.

3.2.3 Vehicles will be travelling at low speeds in the area between the two buildings whilst waiting to enter the gated access to the internal car park or whilst entering or exiting one of the on-street parking bays. A footpath is provided to enable safe access to the buildings, which will be demarked using a different surface treatment denoting pedestrian priority. Crossing points between the two buildings will be demarked from the road surface by different surface treatment to enable a direct and safe route between the buildings. These lead directly to the residential cores to ensure that there is no requirement to walk along the residential building frontage.

3.2.4 Apollo Medical have been consulted on the layout on behalf of the future occupiers, the local NHS Clinical Commissioning Group (CCG). They advise that locating a footpath immediately next to the health hub building would not be acceptable to the CCG for patient privacy reasons. The proposed arrangement addresses these concerns whilst providing convenient pedestrian accessibility between buildings and to car parking spaces. The correspondence from Apollo Medical is provided in **Appendix E**.

3.2.5 Many pedestrian journeys will pass through the site to the Grand Union Canal footpath using the new link running down the north of the residential building. As shown on the layout in **Appendix H**, a new footway is proposed connecting the site access on A408 High Street to the new link. The footway benefits from a dropped kerb crossing of the internal road which also has tactile paving.

TfL Comment 2

3.2.6 *"An Active Travel Zone (ATZ) assessment has identified a wide range of key destinations that are easily accessible within walking distance of the site. However, TfL's step-by-step guidance has not been followed in preparing the assessment. The applicant is required to assess the routes to key destinations and demonstrate a consideration of KSI's in line with the Mayor's Vision Zero Agenda. Therefore, a comprehensive ATZ assessment is required in order to identify potential improvements to the local walking and cycling environment."*

Response

3.2.7 In light of the COVID -19 Pandemic, a site visit required to carry out an Active Travel Zone assessment cannot be undertaken. Further discussions have been undertaken with TfL officer and it has been agreed that this requirement can be conditioned in light of the current circumstances. The correspondence is provided at **Appendix G**.

3.3 Access Arrangements

TfL Comment 4

3.3.1 *"The existing vehicle access onto High Street will be retained with the ghost island right-turn. The access arrangements for pedestrians and cyclists at the main access require clarification, as the applicant has submitted conflicting plans showing both a shared surface and a footway along the access road. Given the anticipated vehicle trip generation, the access road would not be suitable to be treated as a shared surface in accordance with ItP London Plan Policy T2 and Vision Zero."*

Response

3.3.2 A footway is to be provided at the access, to tie in with the existing footway provision on the High Street. The footway will run adjacent to northern edge of the Health Facility, with dropped kerbs and tactile paving provided to ensure safe access for all users to the Pedestrian / Cycle link to access the Grand Union Canal. This is illustrated on the revised plan provided at **Appendix H**.

TfL Comment 4

3.3.3 *"Access for the waste collection vehicle is very tight, and it would appear that should a footway be provided at the main access, there would not be sufficient road width to accommodate the vehicle. Also, the vehicle is required to reverse onto the dedicated walking / cycling link adjacent to the bin store. It is assumed that smaller delivery / servicing vehicles, including ambulances, would perform the same manoeuvre to turn on-site. However, it is not clear from the submitted material whether these vehicles would also be required to reverse onto the walking / cycling link. As such, further information is required in order to demonstrate that the access arrangements for all delivery / servicing vehicles (including ambulances) are compliant with ItP London Plan Policies T2 and T7."*

Response

3.3.4 Swept path analysis has been undertaken to demonstrate that with the provision of the footway there is still sufficient road width to accommodate servicing vehicles. In addition, tracking has been undertaken for a smaller delivery vehicle and ambulance to demonstrate that access arrangements for all vehicles are suitable. The drawings are provided at **Appendix I**.

3.4 Car Parking

TfL Comment 5

3.4.1 *"An overall parking ratio of 0.83 spaces per residential unit is proposed (including the 11 motorcycle spaces proposed). This does not accord with the maximum standard of 0.5 spaces per unit of the ItP London Plan. A reduced level of car parking must be provided, given the Mayor's target for 80% of all trips to be made by active modes or public transport by 2041 (ItP London Plan Policy T1). The proposed level of car parking does not reflect the surrounding provision of walking and cycling infrastructure, and the aspirations to deliver further improvements. Moreover, the availability of public transport, including future Elizabeth line services, will encourage a far lower demand for private car travel and ownership. It is also proposed that 20 car parking spaces and one ambulance drop off bay will be provided for the health facility. Evidence should be provided to justify this provision."*

Response

3.4.2 Having considered both comments from LBH and TfL regarding the parking provision we note that they respectively request increases and decreases in car parking. On reflection we consider the proposed provision represents an appropriate level of parking considering the sustainable location of the development whilst providing adequate parking to meet the need of future residents of the site.

3.4.3 20 car parking spaces are proposed for the health facility. This quantum of spaces has been provided in accordance with a similar scheme within the London Borough of Hillingdon at Drayton Garden Village (*Planning Ref: 5107/APP/2009/2348*). 19 spaces were provided for a health centre of 11,679sqft which was deemed acceptable by both LBH and TfL which is comparable to the size of the health facility to be provided. In addition, Apollo Medical have been consulted on behalf of the future occupiers, the local CCG, and have confirmed that 20 parking spaces will be sufficient for the operation of the health facility for both staff and patients. The letter is provided in **Appendix E**.

TfL Comment 6

3.4.4 *"Blue Badge spaces will be provided (24 for the residential development and two for the health facility), which represents 10% provision from the outset. This is welcomed. The provision of two car club spaces is also welcomed, however these spaces should be provided with active electric vehicle charging points (EVCPs) in accordance with Policy T6.1 of the ItP London Plan. TfL note that the provision of car club spaces should support a lower overall parking provision for the residential development. The provision of four visitor car parking spaces for the residential development is not acceptable and the spaces should be removed."*

Response

3.4.5 It is now proposed to provide an additional 2 car club spaces on the site allocating a total of 4 spaces to the car club. This provides a benefit to the future residents and local community reducing the necessity for individuals to own a car. Enterprise Car Club have expressed their interest in the scheme and occupying all 4 of the car club spaces. The letter is provided in **Appendix D.**

3.4.6 All spaces will be provided with active electric vehicle charging points. There are now no visitor car parking bays for the residential units. The updated layout reflecting these changes is provided in **Appendix H**.

TfL Comment 7

3.4.7 *"Swept path analysis is required to demonstrate that the car parking spaces can be accessed safely. To minimise overspill parking and promote sustainable travel, a Section 106 agreement that prevents residents from obtaining permits to park in the adjoining CPZ will be required."*

Response

3.4.8 Swept path analysis has been undertaken for certain car parking spaces. The drawings are provided in **Appendix J** and demonstrate that all spaces can be accessed safely.

3.5 Cycle Parking

TfL Comment 8

3.5.1 *"A total of 427 long-stay cycle parking spaces are provided for the residential development, in accordance with the ItP London Plan minimum standards. An additional 20 cycle parking spaces are proposed externally; clarification is required to demonstrate this provision satisfies the requirement for residential short-stay spaces and the requirements for the health facility. The applicant should confirm the expected number of FTE staff for the health facility in order to calculate the minimum required provision."*

Response

3.5.2 Sheffield Stands for 20 cycles are provided adjacent to the Grand Union Pedestrian / Cycle link. Of these, 7 spaces are for visitors to the residential units to meet the ItP London Plan standards. The remainder 13 spaces are adequate to serve the Health Facility on the basis of 25 full time staff in accordance with the ItP London Plan.

TfL Comment 9

3.5.3 *"The long-stay residential provision is not compliant with the London Cycling Design Standards (LCDS) in terms of providing sufficient manoeuvring room to access each parking space. Further detail is also required on the type of provision (including at least 20% Sheffield stands and further 5% wider spaces for non-standard bicycles). Details of access routes to cycle parking areas must be clarified."*

Response

3.5.4 A total of 447 long stay spaces are now being provided across the development for residents. With an additional 10 sheffield stands provided externally for visitors and to serve the health facility. The long stay parking provision has been amended to provide 23 wider spaces (5% of the total provision) for non- standard bicycles and sufficient manoeuvring room provided to access each space.

3.5.5 All external bike stores will be accessed via doors fronting onto the pedestrian/ cycle facilities surrounding the buildings. The internal bike store will be accessed via the ground floor car park via the gated access.

3.6 Trip Generation

TfL Comment 10

3.6.1 *"The trip generation assessment is not acceptable. The applicant is required to provide a breakdown of the proposed development trip generation by travel mode. The development impacts on the existing public transport network have not been assessed. TfL will await the public transport impact assessment in order to determine whether a contribution towards local bus capacity enhancements will be sought."*

Response

3.6.2 Upon reviewing the trip rates provided in the TA, TfL have agreed with the residential trip rates. For the health facility, TfL have requested the bus trip generation is calculated using an alternative GP Surgery site in London which is included in the TRICS database (WH-05-G01 Garratt Lane Wandsworth). This has been obtained and is used within this assessment. For completeness the trip rates are provided at **Appendix K**.

3.6.3 The total trip generation for the proposed development resulting from the multimodal trip rates are derived below.

Table 3.1: Total Multi – Modal Trip Generation

	AM Peak Hour (0800-0900)			PM Peak Hour (1700-1800)		
	Arrive	Depart	Two-Way	Arrive	Depart	Two-Way
Vehicles	35	37	72	47	32	80
Cyclists	1	3	4	1	1	1
Vehicle occupants	38	52	90	60	41	101
Pedestrians	11	22	33	19	15	34
Bus Passengers	4	11	15	6	5	11
Rail Passengers	1	14	16	7	1	9

Source: TRICS and Consultants Calculations

3.6.4 As the above table shows the development will generate 15 and 11 two-way bus trips during the AM and PM peak hours respectively. Of these 14 and 7 two-way trips will be generated residential units whilst the remaining trips will be associated with the Health Facility.

3.6.5 At present it is highly likely that the existing Yiewsley Health Centre will be relocated to the proposed development. On this basis, a proportion of the trips generated from the health facility will not be new trips to the network but instead be relocated from the existing location to the development. The current Yiewsley Health Centre has a floor area of 650sqm, whilst the new health facility on site has a floor area of 929sqm. These have been used to calculate the net change in bus trips which is set out in Table 3.2 below.

Table 3.2: Health Facility Bus Trips Net Impact Assessment

	AM Peak Hour (0800-0900)			PM Peak Hour (1700-1800)		
	Arrive	Depart	Two-Way	Arrive	Depart	Two-Way
Existing Yiewsley Health Centre	1	0	1	0	3	3
Proposed Health Facility	1	0	1	0	4	4
Net Impact	0	0	0	0	1	1

3.6.6 Based on the above assessment the site is expected to generate the following new bus trips to the network as set out in Table 3.3.

Table 3.3: Total Bus Trips

	AM Peak Hour (0800-0900)			PM Peak Hour (1700-1800)		
	Arrive	Depart	Two-Way	Arrive	Depart	Two-Way
Residential	3	11	14	5	2	7
Health Facility	0	0	0	0	1	1
Total	3	11	14	5	3	8

3.6.7 On the above assessment, the proposed development is forecast to generate a net increase of 14 and 8 two-way bus trips in the peak hours respectively. Bus services 222, U1, U3 and U5 all serve the site and operate on a frequency of 5-6 services during the peak hours. Therefore, there will be an increase of less than 1 additional trip on each service during the peak hours.

3.7 Delivery and Servicing Plan (DSP)

TfL Comment 11

3.7.1 *"The submitted Delivery and Servicing Plan (DSP) is welcomed and generally acceptable; however, the plan should be amended in accordance with the above comments regarding servicing access. Any approved DSP will need to be secured by condition."*

Response

3.7.2 The DSP has been updated in accordance with the comments set out above and is provided in **Appendix L**.

Appendix A LBH and TfL Comments

Transport for London

Planning Ref: 68663/APP/2020/705
TfL Spatial Planning Ref: HLDN/20/18

Transport for London
City Planning

5 Endeavour Square
Westfield Avenue
Stratford
London E20 1JN

Phone 020 7222 5600
www.tfl.gov.uk

Mr Matt Kolaszewski
London Borough of Hillingdon
-Sent via email only-

21 May 2020

Dear Matt,

Re: 217 High Street, Yiewsley – TfL Detailed Comments

I write to provide detailed strategic transport comments on this application reference 68663/APP/2020/705. These provide more detail on the matters raised in the GLA Stage 1 Planning Report GLA/5000/01 dated 18 May 2020. Please note that these are additional also to any response you may have received from my colleagues in infrastructure or asset protection and from TfL as a party with a property interest.

This response relates to an application for the 'erection of 5 and 6 storey buildings to provide a D1 Health Facility (approximately 10,000sqft) and 235 residential apartments with associated parking, communal podium garden, landscaping, pedestrian and cycle canal link and external works following the demolition of the existing buildings.'

Please note that the following comments represent the view of TfL and are made entirely on a 'without prejudice' basis. They should not be taken to represent an indication of any subsequent Mayoral decision in relation to a planning application based on the proposed scheme. In addition, these comments do not necessarily represent the views of the Greater London Authority (GLA).

Site Description and Context

The application site is located within Yiewsley town centre, bounded by High Street to the east, the Grand Union Canal to the west and commercial uses to the north and south. High Street (A408) forms part of the Strategic Road Network (SRN) and is provided with two lanes in each direction. The nearest part of the Transport for London Road Network (TLRN) is more than 3km from the site.

The site is served by four bus routes. The nearest bus stops serving all four routes are located on High Street within 220m of the site. The site records a public

transport access level (PTAL) of 2 on a scale of 0 to 6b, where 6b is the highest. West Drayton station, currently served by TfL Rail and the Elizabeth line in future, is approximately 1km to the south. A manual calculation undertaken by the applicant provides a PTAL level of 3, accounting for the rail services provided at West Drayton station.

Walking and Cycling

Improvements to the site frontage with High Street are proposed and will need to be secured through a Section 278 Agreement with the Council. A dedicated route is provided for pedestrians and cyclists from the residential building to the Grand Union Canal. The proposed improvement to the Grand Union Canal frontage is also welcomed and may offer an alternative walking / cycling route to West Drayton Station. The applicant should implement wayfinding at this location.

Notwithstanding, the development site is car-dominated with excessive parking provision, and therefore the proposals do not accord with Intend to Publish (ItP) London Plan Policy T2 – Healthy Streets. The car park between the residential building and the health facility, providing access to the residential entrances, is not considered suitable for pedestrians and cyclists.

An Active Travel Zone (ATZ) assessment has identified a wide range of key destinations that are easily accessible within walking distance of the site. However, TfL's step-by-step guidance has not been followed in preparing the assessment. The applicant is required to assess the routes to key destinations and demonstrate a consideration of KSI's in line with the Mayor's Vision Zero Agenda. Therefore, a comprehensive ATZ assessment is required in order to identify potential improvements to the local walking and cycling environment.

Access

The existing vehicle access onto High Street will be retained with the ghost island right-turn. The access arrangements for pedestrians and cyclists at the main access require clarification, as the applicant has submitted conflicting plans showing both a shared surface and a footway along the access road. Given the anticipated vehicle trip generation, the access road would not be suitable to be treated as a shared surface in accordance with ItP London Plan Policy T2 and Vision Zero.

Access for the waste collection vehicle is very tight, and it would appear that should a footway be provided at the main access, there would not be sufficient road width to accommodate the vehicle. Also, the vehicle is required to reverse onto the dedicated walking / cycling link adjacent to the bin store. It is assumed that smaller delivery / servicing vehicles, including ambulances, would perform the same manoeuvre to turn on-site. However, it is not clear from the submitted material whether these vehicles would also be required to reverse onto the walking / cycling link. As such, further information is required in order to demonstrate that

the access arrangements for all delivery / servicing vehicles (including ambulances) are compliant with ItP London Plan Policies T2 and T7.

Two further points of access for pedestrians are provided along the frontage of the site with High Street, connecting to the public realm area fronting the health facility.

Car Parking

An overall parking ratio of 0.83 spaces per residential unit is proposed (including the 11 motorcycle spaces proposed). This does not accord with the maximum standard of 0.5 spaces per unit of the ItP London Plan. A reduced level of car parking must be provided, given the Mayor's target for 80% of all trips to be made by active modes or public transport by 2041 (ItP London Plan Policy T1). The proposed level of car parking does not reflect the surrounding provision of walking and cycling infrastructure, and the aspirations to deliver further improvements. Moreover, the availability of public transport, including future Elizabeth line services, will encourage a far lower demand for private car travel and ownership. It is also proposed that 20 car parking spaces and one ambulance drop off bay will be provided for the health facility. Evidence should be provided to justify this provision.

26 Blue Badge spaces will be provided (24 for the residential development and two for the health facility), which represents 10% provision from the outset. This is welcomed. The provision of two car club spaces is also welcomed, however these spaces should be provided with active electric vehicle charging points (EVCPs) in accordance with Policy T6.1 of the ItP London Plan. TfL note that the provision of car club spaces should support a lower overall parking provision for the residential development. The provision of four visitor car parking spaces for the residential development is not acceptable and the spaces should be removed.

Swept path analysis is required to demonstrate that the car parking spaces can be accessed safely. To minimise overspill parking and promote sustainable travel, a Section 106 agreement that prevents residents from obtaining permits to park in the adjoining CPZ will be required.

A Car Parking Management Plan (CPMP) has been prepared to accompany the application. The plan should be monitored and reviewed as part of the Travel Plan and should set out how car parking could be re-provided as cycle storage in future. The CPMP should be secured by condition. 20% of parking spaces will be provided with active EVCPs and passive provision provided for the rest; this should be secured by condition.

Car parking spaces should be leased rather than sold to ensure that spaces are used by those who need them at any given time and to support future re-purposing of the spaces, including changes to transport technology or services.

Cycle Parking

A total of 427 long-stay cycle parking spaces are provided for the residential development, in accordance with the ItP London Plan minimum standards. An additional 20 cycle parking spaces are proposed externally; clarification is required

to demonstrate this provision satisfies the requirement for residential short-stay spaces and the requirements for the health facility. The applicant should confirm the expected number of FTE staff for the health facility in order to calculate the minimum required provision.

The long-stay residential provision is not compliant with the London Cycling Design Standards (LCDS) in terms of providing sufficient manoeuvring room to access each parking space. Further detail is also required on the type of provision (including at least 20% Sheffield stands and further 5% wider spaces for non-standard bicycles). Details of access routes to cycle parking areas must be clarified.

Trip Generation and Impacts

The trip generation assessment is not acceptable. The applicant is required to provide a breakdown of the proposed development trip generation by travel mode. The development impacts on the existing public transport network have not been assessed. TfL will await the public transport impact assessment in order to determine whether a contribution towards local bus capacity enhancements will be sought.

The proposed development is expected to generate a total of 72 and 80 two-way vehicle trips will occur in the AM and PM peaks respectively. This represents a net increase of 45 two-way vehicle trips in the AM peak and a net decrease of 55 two-way vehicle trips PM peak respectively.

It is likely that the development impacts on the TLRN would be negligible. However, the applicant's modelling submitted with the Transport Assessment is subject to TfL's Model Auditing Process (MAP).

Delivery and Servicing and Construction Logistics Plan

The submitted Delivery and Servicing Plan (DSP) is welcomed and generally acceptable; however, the plan should be amended in accordance with the above comments regarding servicing access. Any approved DSP will need to be secured by condition.

The submitted Outline Construction Logistics Plan (CLP) is welcomed and is generally acceptable. A Detailed CLP prepared in accordance with TfL's CLP Guidance, will need to be secured by condition. The CLP will need to include details of: site access arrangements, booking systems, construction phasing, likely construction trips generated, vehicle routes, scope for load consolidation in order to reduce the number of road trips generated and measures to improve safety for vulnerable road users. The CLP will also need to include co-ordination arrangements with other developments in the area to ensure management of cumulative impacts.

Travel Plan

The submitted framework Travel Plan (TP) is welcomed and generally acceptable. A full TP and all agreed measures should be secured, enforced, monitored and reviewed through the Section 106 agreement. The full TP should set more

ambitious mode share targets for increasing active travel, in line with the Mayor's Transport Strategy.

Community Infrastructure Levy

The development will be liable to Mayoral Community Infrastructure Levy 2 (MCIL2) which came into force on 1st April 2019, as well as borough CIL. The rate for the London Borough of Hillingdon is £60 per square metre of floorspace. The applicant should ensure they are fully aware of the regulations.

Summary

In summary, we request that the applicant addresses the matters discussed above, before we can be supportive of the proposal.

We would like to draw to your attention the following areas or details that will require further work:

- The applicant should review the pedestrian / cycle access arrangements at the main access and along the route to the residential entrance points.
- A comprehensive ATZ assessment should be submitted.
- Car parking provision is excessive and must be reduced in line with the maximum standard of the ItP London Plan.
- Qualitive revisions to the cycle parking are required to ensure compliance with the LCDS and ItP London Plan Policy T5.
- The applicant should confirm the expected number of FTE staff at the health facility, to ensure that the cycle parking provision complies with the minimum standards of the ItP London Plan.
- The applicant is required to assess the development's impacts on the local public transport network. a contribution towards local bus capacity enhancements may be sought accordingly.
- The impacts on the local road network are currently being audited in accordance with TfL's MAP.

I trust this provides you with an understanding of our current position on this application. Please do not hesitate to contact me should you have any queries.

Yours sincerely,

Harrison Bains
Area Planner
Email: HarrisonBains@tfl.gov.uk

HIGHWAY COMMENTS: 217 HIGH STREET YIEWSLEY
REFERENCE: 68663/APP/2020/705

Planning permission is sought to build 5 and 6 storey buildings to provide a D1 Health Facility with 12 consulting rooms (approximately 10,000sqft) and 235 residential apartments comprising 12 studio, 62 one bed, 134 two bed and 27 three bed units. Of these units 24 will be accessible.

The application site fronts onto A408 Yiewsley High Street 400 metres north of Yiewsley town centre which offers a range of services, facilities and transport links. The River Pinn forms the northern boundary with the Grand Union Canal forming the western boundary. The Grand Union Canal is being improved to Quietway standard; this involves laying a bitumen macadam surface along the towpath making the canal a safe and attractive facility for cyclists and pedestrians. As part of the development a 3 metre wide shared use footway would be provided along the northern boundary of the site linking High Street with the Grand Union Canal.

The site is currently in use as a retail warehouse (33,072sqft) with associated parking and a MOT testing and repair centre (15,153sqft) to the rear of the site.

Yiewsley High Street is a dual carriageway and forms part of the Hillingdon classified route network, it benefits from a 30mph speed limit, street lighting and footways on either side of the carriageway.

Transport for London use as system called PTAL (Public Transport Accessibility Level) to measure access the public transport network. PTAL assesses walk times to the nearest public transport location taking into account service frequency. The location is then scored between 0 and 6b where 0 is the worst and 6b the best.

According to the Transport for London WebCAT service the application site has a PTAL ranking of 2 indicating access to public transport is limited compared to London as a whole suggesting that there will be some reliance on the private car for trip making.

The existing vehicular access is a priority controlled T-junction onto the A408 High Street, with a ghost island right turn. No changes are proposed to this junction.

The development would have a total of 185 car parking spaces of which 4 would be for visitors and 2 reserved for Car Club vehicles leaving a balance of 179 spaces for residents. This represents a ratio of 0.76 spaces per unit. All two bed and three bed apartments will be allocated with a car parking space. However there would be just 16 spaces to serve the 74 studio and one bed units. All 24 of the accessible units will be allocated a blue badge/wheelchair accessible car parking space.

The internal parking area for the residents will form a two-storey car park, with first floor access via an internal ramp. Eighty five spaces will be provided on the ground

floor with a further 82 spaces provided on the first floor. The remainder of the residential spaces are provided externally.

A total of 427 cycle spaces will be provided for the residents in designated cycle stores, located on the ground floor of the apartment blocks. These stores will be locked and entry for residents only. There will be 20 cycle parking spaces for visitors and 11 motorcycle parking spaces. There will be 23 Sheffield stands to provide cycle parking for the D1 Health Facility.

The D1 Health Facility will have 20 car parking spaces as well as a drop off/pick up facility and parking for one ambulance.

Electric vehicle parking provision will be provided on the site in accordance with the draft London Plan standards, 20% of spaces will provide active charging provision, with the remaining 80% of spaces having passive provision.

The internal access road will allow a refuse vehicle to enter and turn within the site in a forward gear. A designated bin storage area has been provided on the site adjacent to external parking area. On refuse collection day, the management company will be responsible for ensuring all bins are stored in the storage area and returned to the relevant stores after collection. Collection of clinical waste from the D1 Health Hub will be undertaken via private collection in line with the requirements of the future occupiers. Similarly a fire tender could enter and egress the proposed development in forward gear.

The applicant has provided a Transport Assessment alongside the planning application. This document includes an assessment of the likely impacts the development would have on the surrounding road network. Included in this Transport Assessment are the results of traffic surveys undertaken to determine the extant consent trip generation. These show that the PM Peak 17:00 to 18:00 is the busiest period with 63 vehicle arriving, 71 departing giving a two-way flow of 134 vehicles. To help forecast the number of trips the proposed development would generate the applicants have referred to the TRICS database. The sites used to forecast trip generation have been reviewed by the Highway Authority and are considered valid comparisons. These results show that in the PM Peak the development as a whole will generate 48 arrivals and 32 departures giving a two-way flow of 80 vehicles, these results show that 'with' the new development the number of trips generated in the PM Peak would fall by 54 vehicles. However the same 'before' traffic surveys and TRICS outputs show that in the AM Peak 08:00 to 09:00 two-way flows would increase from 27 to 72 vehicles a net increase of 45 vehicles. The trips that the new development would generate have then been assigned to the network to determine its ability to cope this increase in the demand for road space during the PM Peak. The network has been assessed as of 2019 to provide a baseline, in 2025 with the application site in its extant use and in 2025 with the proposed development. 2025 has been chosen as the future year as this is

when the development is planned to open. For both 2025 future options, extant use and the proposed use, road traffic growth has been factored in. However, the Highway Authority notes that the applicant has failed to include in these assessments committed developments nearby, these should be included as these too will load extra traffic on the network and must be taken into account.

The forecast trips have then been assigned to the highway network, the places that people will visit has been derived from the 2011 Census travel to work data. The traffic associated with the D1 Health Facility is based on its expected catchment area. It has been assumed that people will always take the quickest route to their destination.

Using the forecast trip rates and assignment, the developer has assessed the following junctions to determine their ability to accommodate any uplift in traffic flows.

- B&M Access/A408 High Street - priority controlled T-junction;
- Tesco Superstore/A408 - signal controlled junction; and
- A408 High Street/Falling Lane/Trout Road - signal controlled junction.

The applicant has provided the results of their modelling work which shows that all junctions can operate within capacity in 2025 'with' the proposed development. However, as mentioned above the applicant has not taken into account new trips being generated by committed developments, the Highway Authority requires that these are taken into account.

As mentioned above the residential part of the development would have 185 car parking spaces with the D1 Health Facility having 20 spaces.

The Hillingdon Local Plan: Part 2 Development Management Policies (2020) Policy DMT 6: Vehicle Parking requires that development proposals must comply with the relevant parking standards. For a development of this type the maximum number of parking spaces permitted is 256. As mentioned above 179 spaces are proposed representing a ratio of 0.76 spaces per unit. This ratio is less than the nearby consented sites at Comag, Tavistock Road, Yiewsley (Reference 24843/APP/2018/269) which had 104 units and 104 parking spaces representing a ratio 1 space per unit. Closer to the application site is the land rear of 2 - 24 Horton Road (Reference 71582/APP/2018/2871), this has 86 units and 75 parking spaces representing a ratio 0.87 spaces per unit. Compared to the application site the site on land rear of 2 - 24 Horton Road development has a higher PTAL ranking of 3. Furthermore it comprises of only 1 and 2 bed units, the occupiers of this type of property generally have less car parking demand than that of 3 or 4 bed family units where each adult may own a car and need somewhere to park. Applying the consented Horton Road site car parking ratio of 0.87 to the application site would indicate that 204 car parking spaces are required, as only 179 residential spaces are proposed there is a shortfall of around 25 residential car parking spaces. RC

The Hillingdon Local Plan: Part 2 Development Management Policies (2020) Policy DMT 6: Vehicle Parking requires that for Medical and other Healthcare Practices that at least 2 car parking spaces are provided for each of the 12 consulting rooms, 24 in total. As mentioned above the D1 Heath Facility would have 20 spaces this represents a shortfall of 4 spaces.

The Highway Authority objects to this development as the quantum of residential car parking proposed is contrary to Hillingdon Local Plan: Part 2 Development Management Policies (2020) Policy DMT 6: Vehicle Parking. Furthermore the applicant has failed to take into account committed developments in their Transport Assessment, this is contrary to the Local Plan: Part 2 Policy DMT 1: Managing Transport Impacts, which requires that development proposals undertake a satisfactory Transport Assessment. Given committed developments have not been taken into account the applicant is unable to show what the transport impacts of the development would be and in turn determine what mitigation measures are required.

Should the Planning Authority be minded to recommend approval the following develop contributions are required. The applicant in their Transport Assessment mentions several times the Grand Union Canal Quietway citing this as one of the reasons why the site could be considered to be situated in a sustainable location. However, between the application site and Trout Road to the south the towpath has not been surfaced. A developers contribution is required to improve this length of canal to Quietway standard, this investment is needed make the application sites location as sustainable as the applicant already claims.

As mentioned above the applicant has modelled the impact the development would have on the surrounding road network but has failed to take into account committed developments. This is an omission that needs to be addressed. The Highway Authority requires the applicant to rerun their modelling exercise with the trips generated by committed developments included. The developer will then be required to fund all those works needed overcome any problems identified.

Notwithstanding the above the signalised junctions of A408 High Street/Falling Lane/Trout Road is already at capacity during peak periods giving rise to vehicles queuing presenting risks to the road safety of vulnerable road users. This queuing traffic leads to bus services being delayed, making them less attractive to the user. According to the applicant these bus services are one of reasons why the site is in a sustainable location and why the quantum of car parking proposed is acceptable.

Furthermore, it has been identified that cyclists proceeding southbound along the High Street over this junction are at risk of being hit be a vehicle turning left into Falling Lane. The Highway Authority requires a developer contribution to fund bus priority measures at this junction as well as works to improve road safety and capacity.

The Highway Authority requires that a Travel Plan with mode share targets is produced and implemented. As surety that the targets will be achieved a £20,000 bond is required. In the event of targets not being attained, the Council will use this bond to implement the Travel Plan itself. This bond is returnable if the targets are delivered. This bond should be secured by way of a S106 agreement.

Given that onsite car parking is limited there is the likelihood that parking will be displaced on-street giving rise to parking stress. To address this the Highway Authority require that the applicant enters into a S106 legal agreement to ensure that future residents do not have access to parking permits for the surrounding parking management schemes.

To improve access to Yiewsley town centre a contribution is required for investment in 'Healthy Streets'. The 'Healthy Street' approach focuses on creating streets that are pleasant, safe and attractive, where noise, air pollution, accessibility and lack of seating and shelter are not barriers that prevent people - particularly our most vulnerable people - from getting out and about.

As the new development will involve works to the highway, albeit minor, the developer will be required to enter into a S278 agreement with London Borough Hillingdon under Highways Act 1980 thereby allowing works to be carried out on the Council's highway.

As mentioned above the Highway Authority objects to this development as the quantum of residential parking provided in contrary to Policy DMT:6 Vehicle Parking and the Transport Assessment is contrary to Policy DMT:1 Managing Transport Impacts. However, with investment in the Grand Union Canal Quietway, Healthy Streets and the A408 High Street/Falling Lane/Trout Road - signal controlled junction a car parking ratio of 0.83 giving 195 car parking spaces would be acceptable.

Alan Tilly

Appendix B Committed Development Traffic Flows

High Street, Yiewsley

Network Model - Committed Development - COMAG, Tavistock Road (24843/APP/2018/269) 104 Dwellings

AM Peak Hour	08:00 - 09:00
PM Peak Hour	17:00 - 18:00

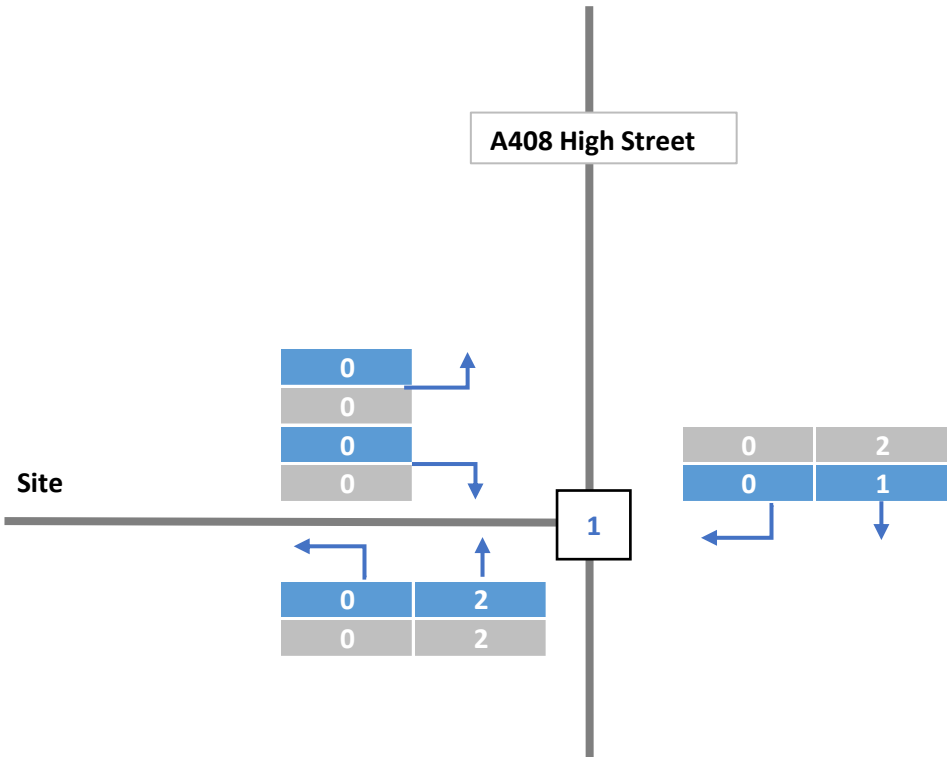

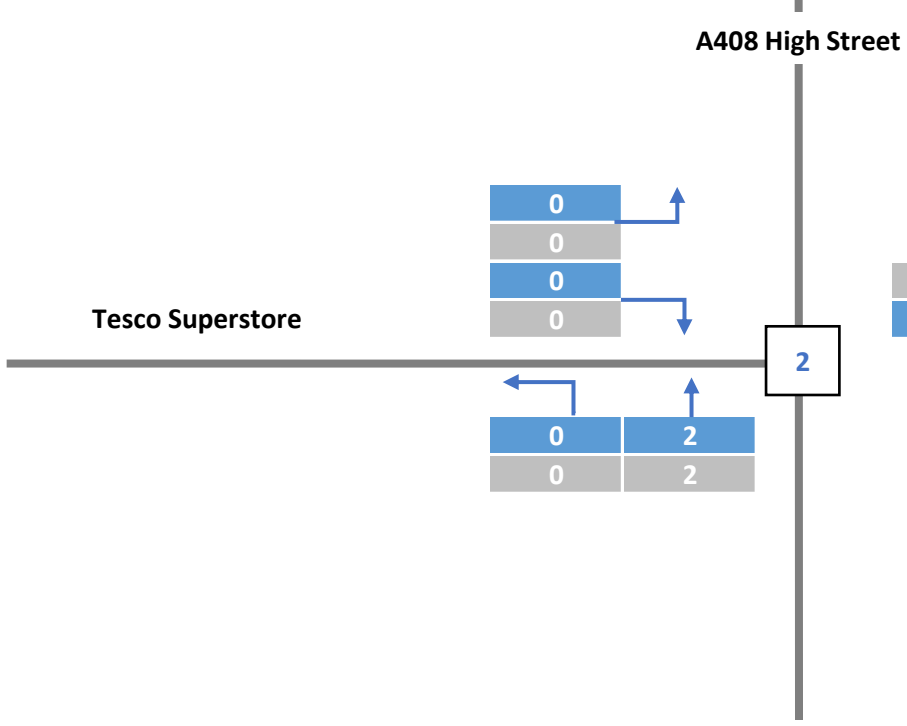

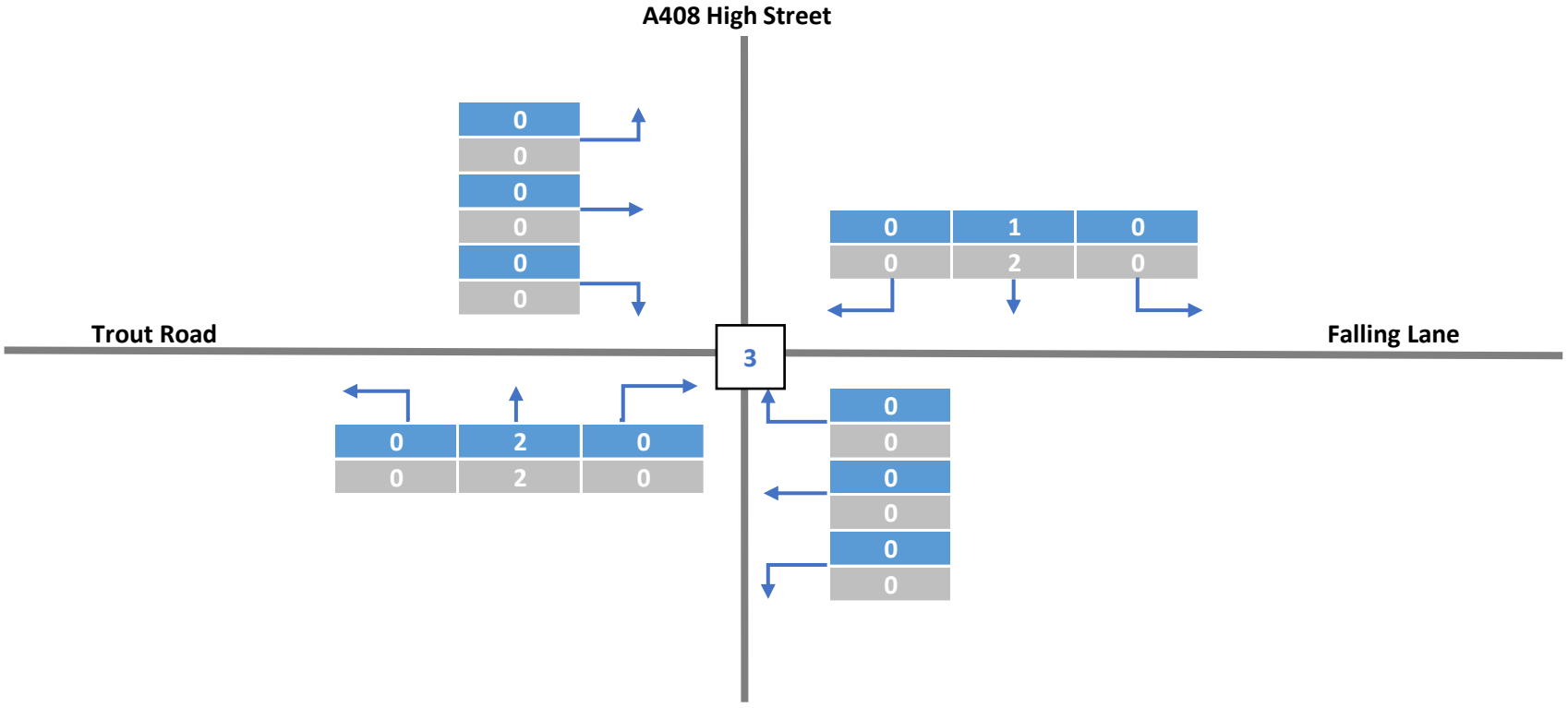

High Street, Yiewsley

Network Model - Committed Development - Horton Road (71582/APP/2018/2871) 86 Dwellings

AM Peak Hour	08:00 - 09:00
PM Peak Hour	17:00 - 18:00

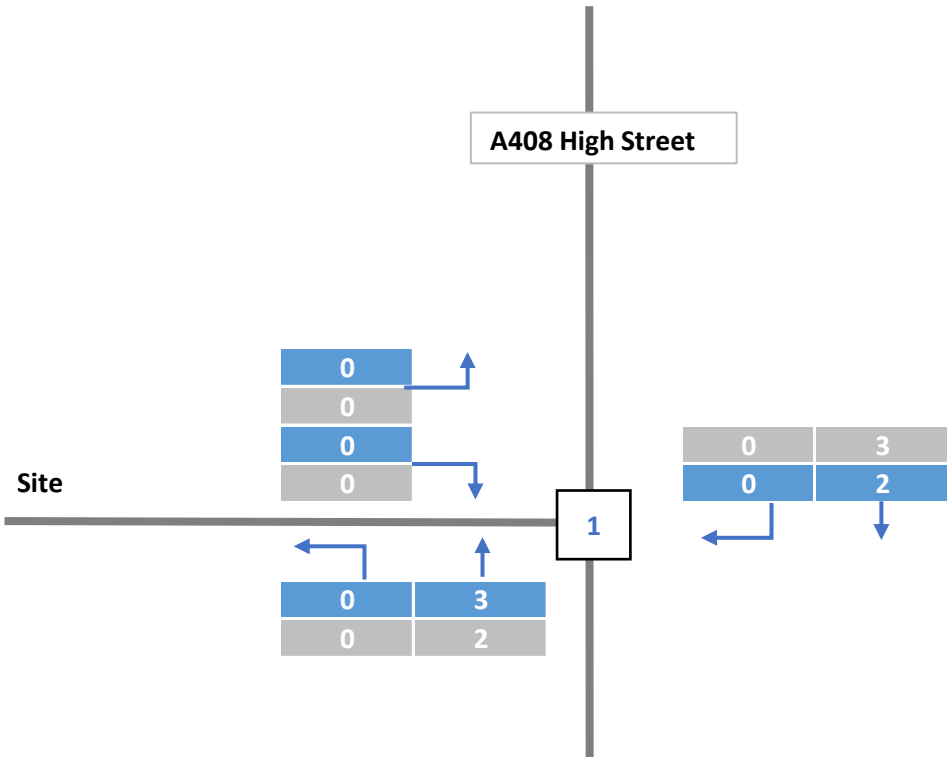

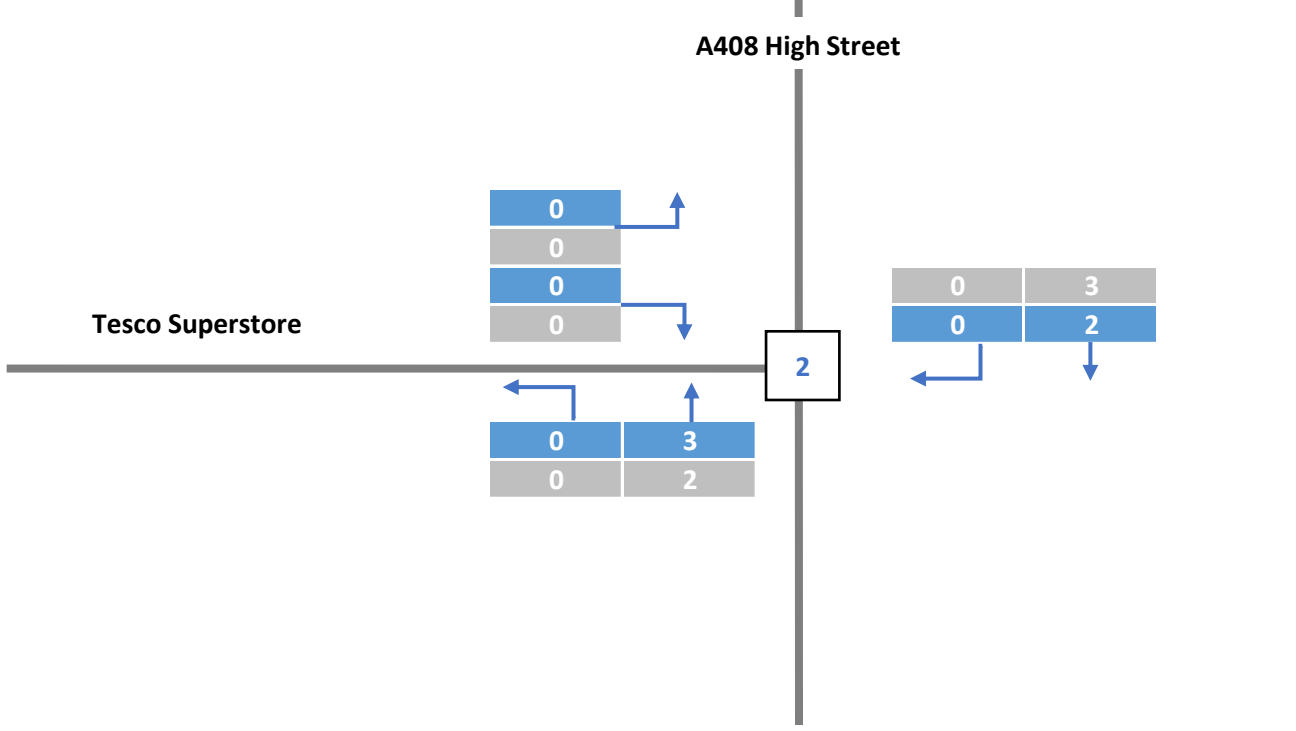

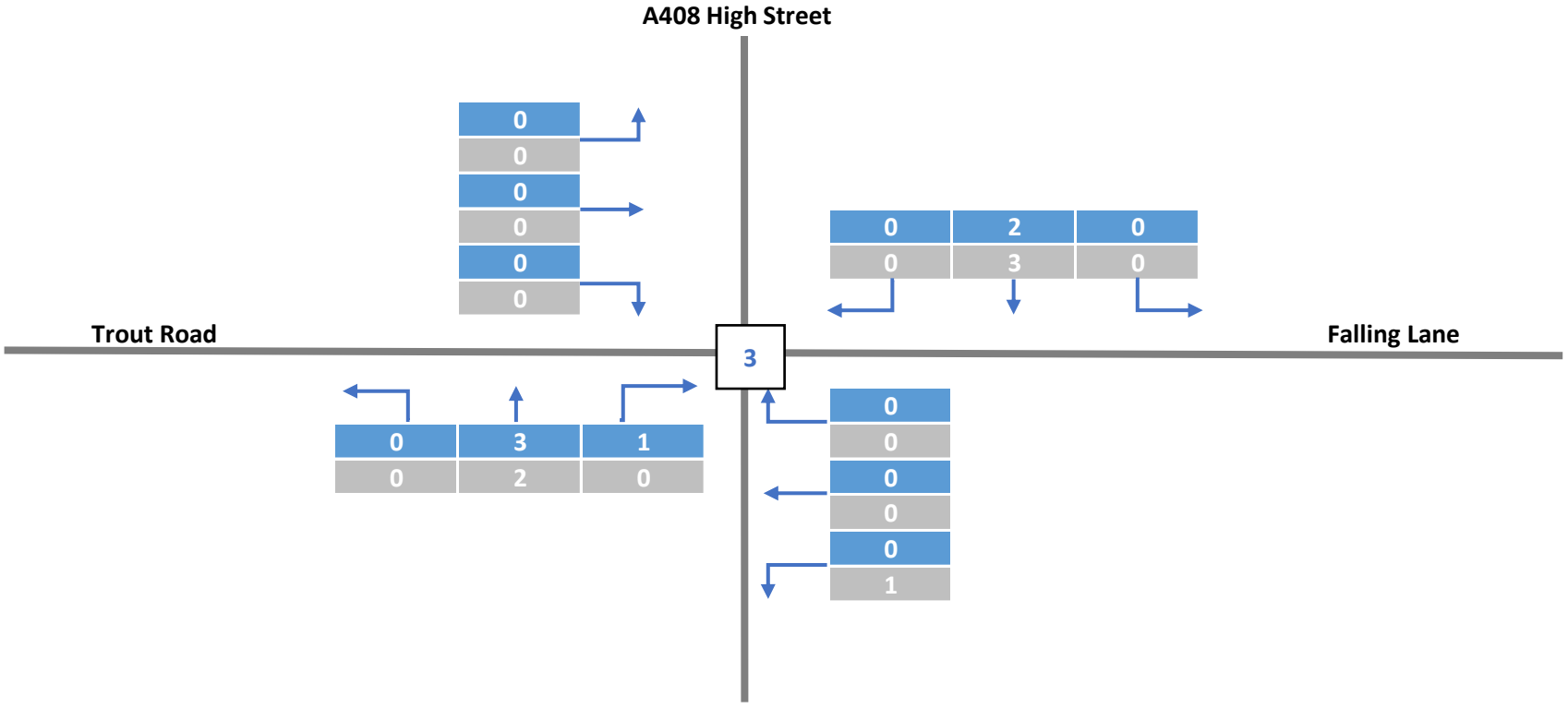

High Street, Yiewsley

Network Model - Committed Development - Bentinck and Tavistock Road (45200/APP/2017/327) 315 Dwellings

AM Peak Hour	08:00 - 09:00
PM Peak Hour	17:00 - 18:00

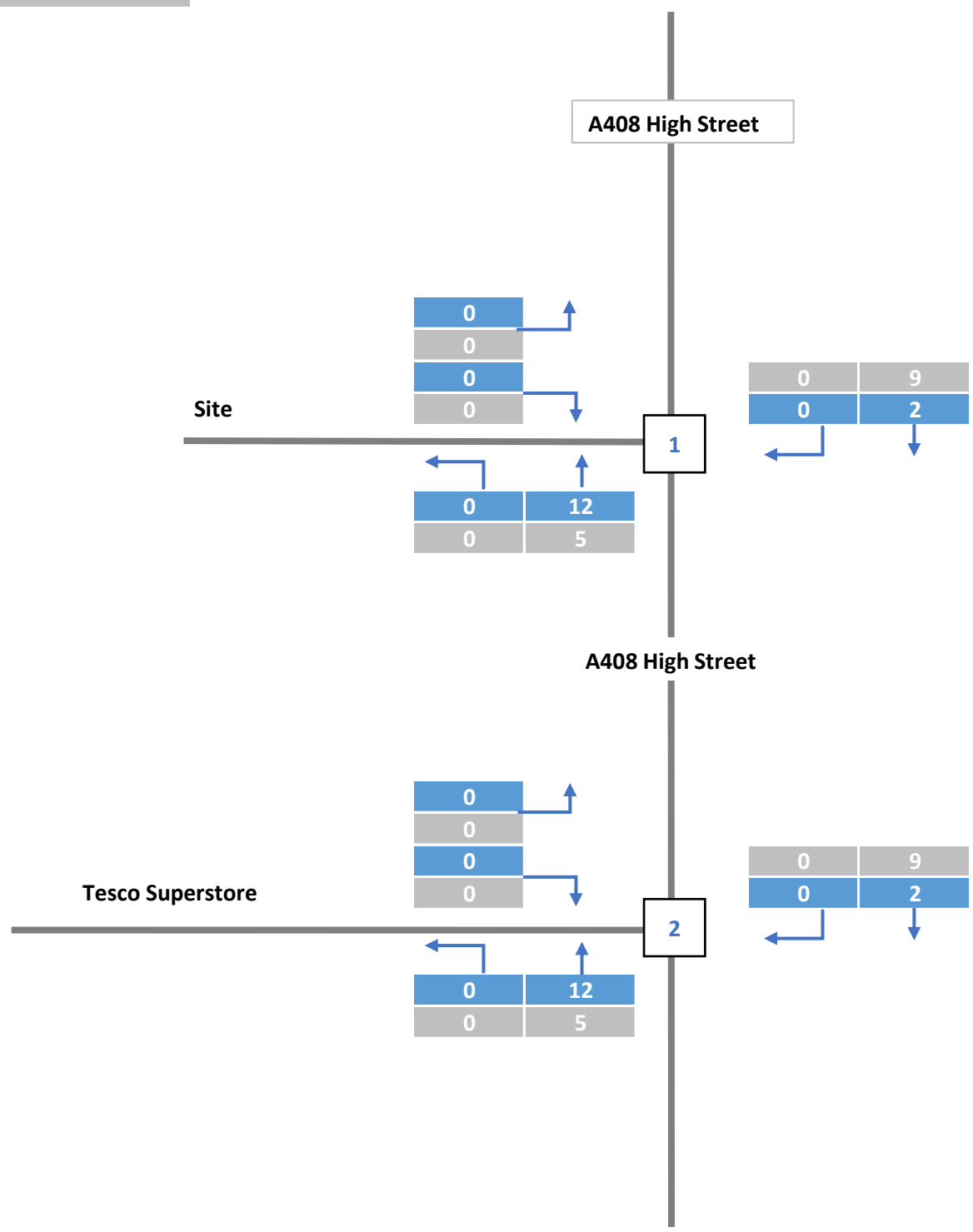

Appendix C Junctions 9 and LINSIG Outputs

Junctions 9

PICADY 9 - Priority Intersection Module

Version: 9.5.1.7462
© Copyright TRL Limited, 2019

For sales and distribution information, program advice and maintenance, contact TRL:
+44 (0)1344 379777 software@trl.co.uk www.trlsoftware.co.uk

The users of this computer program for the solution of an engineering problem are in no way relieved of their responsibility for the correctness of the solution

Filename: 46187_5501_J1 Site Access updated.j9
Path: J:\46187 - 217 High Street, Yiewsley\TRANSPORT\WORKING DOCUMENTS\JUNCTION MODELLING\JUNCTION MODELS\JUNCTION 1
Report generation date: 08/06/2020 15:46:32

»2019 Baseline, AM
»2019 Baseline, PM
»2019 Baseline , Saturday
»2025 + CD with Existing, AM
»2025 + CD with Existing, PM
»2025 + CD with Existing, Saturday
»2025 + CD with Proposed Development, AM
»2025 + CD with Proposed Development, PM
»2025 + CD with Proposed Development, Saturday

Summary of junction performance

	AM				PM				Saturday			
	Queue (PCU)	Delay (s)	RFC	LOS	Queue (PCU)	Delay (s)	RFC	LOS	Queue (PCU)	Delay (s)	RFC	LOS
	2019 Baseline											
Stream B-AC	0.1	14.15	0.04	B	0.4	15.57	0.26	C	0.7	16.84	0.43	C
Stream C-AB	0.0	7.87	0.02	A	0.1	7.77	0.07	A	0.2	7.96	0.15	A
	2025 + CD with Existing											
Stream B-AC	0.1	15.23	0.04	C	0.4	17.21	0.28	C	0.8	18.21	0.45	C
Stream C-AB	0.0	8.10	0.02	A	0.1	8.00	0.07	A	0.2	8.11	0.16	A
	2025 + CD with Proposed Development											
Stream B-AC	0.1	13.24	0.13	B	0.1	13.98	0.12	B	0.1	11.15	0.08	B
Stream C-AB	0.0	7.42	0.03	A	0.0	7.81	0.04	A	0.0	7.05	0.02	A

Values shown are the highest values encountered over all time segments. Delay is the maximum value of average delay per arriving vehicle.

File summary

File Description

Title	
Location	
Site number	
Date	19/02/2020
Version	
Status	(new file)
Identifier	
Client	
Jobnumber	
Enumerator	CORP\efew
Description	

Units

Distance units	Speed units	Traffic units input	Traffic units results	Flow units	Average delay units	Total delay units	Rate of delay units
m	kph	PCU	PCU	perHour	s	-Min	perMin

Analysis Options

Calculate Queue Percentiles	Calculate residual capacity	RFC Threshold	Average Delay threshold (s)	Queue threshold (PCU)
		0.85	36.00	20.00

Demand Set Summary

ID	Scenario name	Time Period name	Traffic profile type	Start time (HH:mm)	Finish time (HH:mm)	Time segment length (min)
D1	2019 Baseline	AM	ONE HOUR	07:45	09:15	15
D2	2019 Baseline	PM	ONE HOUR	16:45	18:15	15
D3	2019 Baseline	Saturday	ONE HOUR	10:45	12:15	15
D4	2025 + CD with Existing	AM	ONE HOUR	07:45	09:15	15
D5	2025 + CD with Existing	PM	ONE HOUR	16:45	18:15	15
D6	2025 + CD with Existing	Saturday	ONE HOUR	10:45	12:15	15
D7	2025 + CD with Proposed Development	AM	ONE HOUR	07:45	09:15	15
D8	2025 + CD with Proposed Development	PM	ONE HOUR	16:45	18:15	15
D9	2025 + CD with Proposed Development	Saturday	ONE HOUR	10:45	12:15	15

Analysis Set Details

ID	Network flow scaling factor (%)
A1	100.000

2019 Baseline, AM

Data Errors and Warnings

No errors or warnings

Junction Network

Junctions

Junction	Name	Junction type	Major road direction	Use circulating lanes	Junction Delay (s)	Junction LOS
1	Site Access/ High Street	T-Junction	Two-way		0.14	A

Junction Network Options

Driving side	Lighting
Left	Normal/unknown

Arms

Arms

Arm	Name	Description	Arm type
A	High Street S		Major
B	Site Access		Minor
C	High Street N		Major

Major Arm Geometry

Arm	Width of carriageway (m)	Has kerbed central reserve	Has right turn bay	Width for right turn (m)	Visibility for right turn (m)	Blocks?	Blocking queue (PCU)
C - High Street N	13.12		✓	2.20	195.3	✓	2.00

Geometries for Arm C are measured opposite Arm B. Geometries for Arm A (if relevant) are measured opposite Arm D.

Minor Arm Geometry

Arm	Minor arm type	Lane width (m)	Visibility to left (m)	Visibility to right (m)
B - Site Access	One lane	4.00	29	18

Slope / Intercept / Capacity

Priority Intersection Slopes and Intercepts

Stream	Intercept (PCU/hr)	Slope for A-B	Slope for A-C	Slope for C-A	Slope for C-B
B-A	545	0.069	0.173	0.109	0.248
B-C	699	0.074	0.187	-	-
C-B	687	0.184	0.184	-	-

The slopes and intercepts shown above do NOT include any corrections or adjustments.

Streams may be combined, in which case capacity will be adjusted.

Values are shown for the first time segment only; they may differ for subsequent time segments.

Traffic Demand

Demand Set Details

ID	Scenario name	Time Period name	Traffic profile type	Start time (HH:mm)	Finish time (HH:mm)	Time segment length (min)
D1	2019 Baseline	AM	ONE HOUR	07:45	09:15	15

Vehicle mix source	PCU Factor for a HV (PCU)
HV Percentages	2.00

Demand overview (Traffic)

Arm	Linked arm	Use O-D data	Average Demand (PCU/hr)	Scaling Factor (%)
A - High Street S		✓	854	100.000
B - Site Access		✓	12	100.000
C - High Street N		✓	935	100.000

Origin-Destination Data

Demand (PCU/hr)

		To		
		A - High Street S	B - Site Access	C - High Street N
From	A - High Street S	0	15	839
	B - Site Access	7	0	5
	C - High Street N	924	11	0

Vehicle Mix

Heavy Vehicle Percentages

		To		
		A - High Street S	B - Site Access	C - High Street N
From	A - High Street S	0	0	4
	B - Site Access	60	0	0
	C - High Street N	5	10	0

Results

Results Summary for whole modelled period

Stream	Max RFC	Max Delay (s)	Max Queue (PCU)	Max LOS
B-AC	0.04	14.15	0.1	B
C-AB	0.02	7.87	0.0	A
C-A				
A-B				
A-C				

Main Results for each time segment

07:45 - 08:00

Stream	Total Demand (PCU/hr)	Capacity (PCU/hr)	RFC	Throughput (PCU/hr)	End queue (PCU)	Delay (s)	Unsignalised level of service
B-AC	9	425	0.021	9	0.0	11.063	B
C-AB	8	569	0.015	8	0.0	7.058	A
C-A	696			696			
A-B	11			11			
A-C	632			632			

08:00 - 08:15

Stream	Total Demand (PCU/hr)	Capacity (PCU/hr)	RFC	Throughput (PCU/hr)	End queue (PCU)	Delay (s)	Unsignalised level of service
B-AC	11	390	0.028	11	0.0	12.163	B
C-AB	10	547	0.018	10	0.0	7.377	A
C-A	831			831			
A-B	13			13			
A-C	754			754			

08:15 - 08:30

Stream	Total Demand (PCU/hr)	Capacity (PCU/hr)	RFC	Throughput (PCU/hr)	End queue (PCU)	Delay (s)	Unsignalised level of service
B-AC	13	339	0.039	13	0.1	14.152	B
C-AB	12	515	0.024	12	0.0	7.867	A
C-A	1017			1017			
A-B	17			17			
A-C	924			924			

08:30 - 08:45

Stream	Total Demand (PCU/hr)	Capacity (PCU/hr)	RFC	Throughput (PCU/hr)	End queue (PCU)	Delay (s)	Unsignalised level of service
B-AC	13	339	0.039	13	0.1	14.154	B
C-AB	12	515	0.024	12	0.0	7.867	A
C-A	1017			1017			
A-B	17			17			
A-C	924			924			

08:45 - 09:00

Stream	Total Demand (PCU/hr)	Capacity (PCU/hr)	RFC	Throughput (PCU/hr)	End queue (PCU)	Delay (s)	Unsignalised level of service
B-AC	11	390	0.028	11	0.0	12.167	B
C-AB	10	547	0.018	10	0.0	7.381	A
C-A	831			831			
A-B	13			13			
A-C	754			754			

09:00 - 09:15

Stream	Total Demand (PCU/hr)	Capacity (PCU/hr)	RFC	Throughput (PCU/hr)	End queue (PCU)	Delay (s)	Unsignalised level of service
B-AC	9	425	0.021	9	0.0	11.070	B
C-AB	8	569	0.015	8	0.0	7.061	A
C-A	696			696			
A-B	11			11			
A-C	632			632			

2019 Baseline, PM

Data Errors and Warnings

No errors or warnings

Junction Network

Junctions

Junction	Name	Junction type	Major road direction	Use circulating lanes	Junction Delay (s)	Junction LOS
1	Site Access/ High Street	T-Junction	Two-way		0.72	A

Junction Network Options

Driving side	Lighting
Left	Normal/unknown

Traffic Demand

Demand Set Details

ID	Scenario name	Time Period name	Traffic profile type	Start time (HH:mm)	Finish time (HH:mm)	Time segment length (min)
D2	2019 Baseline	PM	ONE HOUR	16:45	18:15	15

Vehicle mix source	PCU Factor for a HV (PCU)
HV Percentages	2.00

Demand overview (Traffic)

Arm	Linked arm	Use O-D data	Average Demand (PCU/hr)	Scaling Factor (%)
A - High Street S		✓	962	100.000
B - Site Access		✓	75	100.000
C - High Street N		✓	899	100.000

Origin-Destination Data

Demand (PCU/hr)

		To		
		A - High Street S	B - Site Access	C - High Street N
From	A - High Street S	0	35	927
	B - Site Access	45	0	30
	C - High Street N	869	30	0

Vehicle Mix

Heavy Vehicle Percentages

		To		
		A - High Street S	B - Site Access	C - High Street N
From	A - High Street S	0	0	3
	B - Site Access	2	0	0
	C - High Street N	3	0	0

Results

Results Summary for whole modelled period

Stream	Max RFC	Max Delay (s)	Max Queue (PCU)	Max LOS
B-AC	0.26	15.57	0.4	C
C-AB	0.07	7.77	0.1	A
C-A				
A-B				
A-C				

Main Results for each time segment

16:45 - 17:00

Stream	Total Demand (PCU/hr)	Capacity (PCU/hr)	RFC	Throughput (PCU/hr)	End queue (PCU)	Delay (s)	Unsignalised level of service
B-AC	56	410	0.138	56	0.2	10.278	B
C-AB	23	555	0.041	22	0.0	6.758	A
C-A	654			654			
A-B	26			26			
A-C	698			698			

17:00 - 17:15

Stream	Total Demand (PCU/hr)	Capacity (PCU/hr)	RFC	Throughput (PCU/hr)	End queue (PCU)	Delay (s)	Unsignalised level of service
B-AC	67	371	0.182	67	0.2	11.974	B
C-AB	27	530	0.051	27	0.1	7.155	A
C-A	781			781			
A-B	31			31			
A-C	833			833			

17:15 - 17:30

Stream	Total Demand (PCU/hr)	Capacity (PCU/hr)	RFC	Throughput (PCU/hr)	End queue (PCU)	Delay (s)	Unsignalised level of service
B-AC	83	316	0.261	82	0.3	15.506	C
C-AB	33	497	0.067	33	0.1	7.768	A
C-A	956			956			
A-B	39			39			
A-C	1021			1021			

17:30 - 17:45

Stream	Total Demand (PCU/hr)	Capacity (PCU/hr)	RFC	Throughput (PCU/hr)	End queue (PCU)	Delay (s)	Unsignalised level of service
B-AC	83	316	0.261	83	0.4	15.573	C
C-AB	33	497	0.067	33	0.1	7.769	A
C-A	956			956			
A-B	39			39			
A-C	1021			1021			

17:45 - 18:00

Stream	Total Demand (PCU/hr)	Capacity (PCU/hr)	RFC	Throughput (PCU/hr)	End queue (PCU)	Delay (s)	Unsignalised level of service
B-AC	67	371	0.182	68	0.2	12.033	B
C-AB	27	530	0.051	27	0.1	7.160	A
C-A	781			781			
A-B	31			31			
A-C	833			833			

18:00 - 18:15

Stream	Total Demand (PCU/hr)	Capacity (PCU/hr)	RFC	Throughput (PCU/hr)	End queue (PCU)	Delay (s)	Unsignalised level of service
B-AC	56	410	0.138	57	0.2	10.331	B
C-AB	23	555	0.041	23	0.0	6.764	A
C-A	654			654			
A-B	26			26			
A-C	698			698			

2019 Baseline , Saturday

Data Errors and Warnings

No errors or warnings

Junction Network

Junctions

Junction	Name	Junction type	Major road direction	Use circulating lanes	Junction Delay (s)	Junction LOS
1	Site Access/ High Street	T-Junction	Two-way		1.68	A

Junction Network Options

Driving side	Lighting
Left	Normal/unknown

Traffic Demand

Demand Set Details

ID	Scenario name	Time Period name	Traffic profile type	Start time (HH:mm)	Finish time (HH:mm)	Time segment length (min)
D3	2019 Baseline	Saturday	ONE HOUR	10:45	12:15	15

Vehicle mix source	PCU Factor for a HV (PCU)
HV Percentages	2.00

Demand overview (Traffic)

Arm	Linked arm	Use O-D data	Average Demand (PCU/hr)	Scaling Factor (%)
A - High Street S		✓	825	100.000
B - Site Access		✓	145	100.000
C - High Street N		✓	841	100.000

Origin-Destination Data

Demand (PCU/hr)

		To		
		A - High Street S	B - Site Access	C - High Street N
From	A - High Street S	0	89	736
	B - Site Access	73	0	72
	C - High Street N	768	73	0

Vehicle Mix

Heavy Vehicle Percentages

		To		
		A - High Street S	B - Site Access	C - High Street N
From	A - High Street S	0	0	3
	B - Site Access	0	0	0
	C - High Street N	4	1	0

Results

Results Summary for whole modelled period

Stream	Max RFC	Max Delay (s)	Max Queue (PCU)	Max LOS
B-AC	0.43	16.84	0.7	C
C-AB	0.15	7.96	0.2	A
C-A				
A-B				
A-C				

Main Results for each time segment

10:45 - 11:00

Stream	Total Demand (PCU/hr)	Capacity (PCU/hr)	RFC	Throughput (PCU/hr)	End queue (PCU)	Delay (s)	Unsignalised level of service
B-AC	109	453	0.241	108	0.3	10.402	B
C-AB	55	579	0.096	55	0.1	6.942	A
C-A	578			578			
A-B	67			67			
A-C	554			554			

11:00 - 11:15

Stream	Total Demand (PCU/hr)	Capacity (PCU/hr)	RFC	Throughput (PCU/hr)	End queue (PCU)	Delay (s)	Unsignalised level of service
B-AC	130	420	0.310	130	0.4	12.385	B
C-AB	67	561	0.119	67	0.1	7.357	A
C-A	689			689			
A-B	80			80			
A-C	662			662			

11:15 - 11:30

Stream	Total Demand (PCU/hr)	Capacity (PCU/hr)	RFC	Throughput (PCU/hr)	End queue (PCU)	Delay (s)	Unsignalised level of service
B-AC	160	373	0.428	159	0.7	16.676	C
C-AB	84	541	0.155	83	0.2	7.949	A
C-A	842			842			
A-B	98			98			
A-C	810			810			

11:30 - 11:45

Stream	Total Demand (PCU/hr)	Capacity (PCU/hr)	RFC	Throughput (PCU/hr)	End queue (PCU)	Delay (s)	Unsignalised level of service
B-AC	160	373	0.428	160	0.7	16.844	C
C-AB	84	541	0.155	84	0.2	7.958	A
C-A	842			842			
A-B	98			98			
A-C	810			810			

11:45 - 12:00

Stream	Total Demand (PCU/hr)	Capacity (PCU/hr)	RFC	Throughput (PCU/hr)	End queue (PCU)	Delay (s)	Unsignalised level of service
B-AC	130	420	0.310	131	0.5	12.527	B
C-AB	67	561	0.119	67	0.1	7.367	A
C-A	689			689			
A-B	80			80			
A-C	662			662			

12:00 - 12:15

Stream	Total Demand (PCU/hr)	Capacity (PCU/hr)	RFC	Throughput (PCU/hr)	End queue (PCU)	Delay (s)	Unsignalised level of service
B-AC	109	453	0.241	110	0.3	10.514	B
C-AB	55	579	0.096	56	0.1	6.956	A
C-A	578			578			
A-B	67			67			
A-C	554			554			

2025 + CD with Existing, AM

Data Errors and Warnings

No errors or warnings

Junction Network

Junctions

Junction	Name	Junction type	Major road direction	Use circulating lanes	Junction Delay (s)	Junction LOS
1	Site Access/ High Street	T-Junction	Two-way		0.14	A

Junction Network Options

Driving side	Lighting
Left	Normal/unknown

Traffic Demand

Demand Set Details

ID	Scenario name	Time Period name	Traffic profile type	Start time (HH:mm)	Finish time (HH:mm)	Time segment length (min)
D4	2025 + CD with Existing	AM	ONE HOUR	07:45	09:15	15

Vehicle mix source	PCU Factor for a HV (PCU)
HV Percentages	2.00

Demand overview (Traffic)

Arm	Linked arm	Use O-D data	Average Demand (PCU/hr)	Scaling Factor (%)
A - High Street S		✓	927	100.000
B - Site Access		✓	12	100.000
C - High Street N		✓	1002	100.000

Origin-Destination Data

Demand (PCU/hr)

		To		
		A - High Street S	B - Site Access	C - High Street N
From	A - High Street S	0	15	912
	B - Site Access	7	0	5
	C - High Street N	991	11	0

Vehicle Mix

Heavy Vehicle Percentages

		To		
		A - High Street S	B - Site Access	C - High Street N
From	A - High Street S	0	0	4
	B - Site Access	60	0	0
	C - High Street N	5	10	0

Results

Results Summary for whole modelled period

Stream	Max RFC	Max Delay (s)	Max Queue (PCU)	Max LOS
B-AC	0.04	15.23	0.1	C
C-AB	0.02	8.10	0.0	A
C-A				
A-B				
A-C				

Main Results for each time segment

07:45 - 08:00

Stream	Total Demand (PCU/hr)	Capacity (PCU/hr)	RFC	Throughput (PCU/hr)	End queue (PCU)	Delay (s)	Unsignalised level of service
B-AC	9	411	0.022	9	0.0	11.470	B
C-AB	8	559	0.015	8	0.0	7.187	A
C-A	746			746			
A-B	11			11			
A-C	687			687			

08:00 - 08:15

Stream	Total Demand (PCU/hr)	Capacity (PCU/hr)	RFC	Throughput (PCU/hr)	End queue (PCU)	Delay (s)	Unsignalised level of service
B-AC	11	372	0.029	11	0.0	12.769	B
C-AB	10	535	0.019	10	0.0	7.546	A
C-A	891			891			
A-B	13			13			
A-C	820			820			

08:15 - 08:30

Stream	Total Demand (PCU/hr)	Capacity (PCU/hr)	RFC	Throughput (PCU/hr)	End queue (PCU)	Delay (s)	Unsignalised level of service
B-AC	13	316	0.042	13	0.1	15.221	C
C-AB	12	501	0.024	12	0.0	8.102	A
C-A	1091			1091			
A-B	17			17			
A-C	1004			1004			

08:30 - 08:45

Stream	Total Demand (PCU/hr)	Capacity (PCU/hr)	RFC	Throughput (PCU/hr)	End queue (PCU)	Delay (s)	Unsignalised level of service
B-AC	13	316	0.042	13	0.1	15.227	C
C-AB	12	501	0.024	12	0.0	8.102	A
C-A	1091			1091			
A-B	17			17			
A-C	1004			1004			

08:45 - 09:00

Stream	Total Demand (PCU/hr)	Capacity (PCU/hr)	RFC	Throughput (PCU/hr)	End queue (PCU)	Delay (s)	Unsignalised level of service
B-AC	11	372	0.029	11	0.0	12.776	B
C-AB	10	535	0.019	10	0.0	7.546	A
C-A	891			891			
A-B	13			13			
A-C	820			820			

09:00 - 09:15

Stream	Total Demand (PCU/hr)	Capacity (PCU/hr)	RFC	Throughput (PCU/hr)	End queue (PCU)	Delay (s)	Unsignalised level of service
B-AC	9	411	0.022	9	0.0	11.477	B
C-AB	8	559	0.015	8	0.0	7.187	A
C-A	746			746			
A-B	11			11			
A-C	687			687			

2025 + CD with Existing, PM

Data Errors and Warnings

No errors or warnings

Junction Network

Junctions

Junction	Name	Junction type	Major road direction	Use circulating lanes	Junction Delay (s)	Junction LOS
1	Site Access/ High Street	T-Junction	Two-way		0.74	A

Junction Network Options

Driving side	Lighting
Left	Normal/unknown

Traffic Demand

Demand Set Details

ID	Scenario name	Time Period name	Traffic profile type	Start time (HH:mm)	Finish time (HH:mm)	Time segment length (min)
D5	2025 + CD with Existing	PM	ONE HOUR	16:45	18:15	15

Vehicle mix source	PCU Factor for a HV (PCU)
HV Percentages	2.00

Demand overview (Traffic)

Arm	Linked arm	Use O-D data	Average Demand (PCU/hr)	Scaling Factor (%)
A - High Street S		✓	1030	100.000
B - Site Access		✓	75	100.000
C - High Street N		✓	968	100.000

Origin-Destination Data

Demand (PCU/hr)

		To		
		A - High Street S	B - Site Access	C - High Street N
From	A - High Street S	0	35	995
	B - Site Access	45	0	30
	C - High Street N	938	30	0

Vehicle Mix

Heavy Vehicle Percentages

		To		
		A - High Street S	B - Site Access	C - High Street N
From	A - High Street S	0	0	3
	B - Site Access	2	0	0
	C - High Street N	3	0	0

Results

Results Summary for whole modelled period

Stream	Max RFC	Max Delay (s)	Max Queue (PCU)	Max LOS
B-AC	0.28	17.21	0.4	C
C-AB	0.07	8.00	0.1	A
C-A				
A-B				
A-C				

Main Results for each time segment

16:45 - 17:00

Stream	Total Demand (PCU/hr)	Capacity (PCU/hr)	RFC	Throughput (PCU/hr)	End queue (PCU)	Delay (s)	Unsignalised level of service
B-AC	56	395	0.143	56	0.2	10.710	B
C-AB	23	546	0.041	22	0.0	6.878	A
C-A	706			706			
A-B	26			26			
A-C	749			749			

17:00 - 17:15

Stream	Total Demand (PCU/hr)	Capacity (PCU/hr)	RFC	Throughput (PCU/hr)	End queue (PCU)	Delay (s)	Unsignalised level of service
B-AC	67	354	0.191	67	0.2	12.704	B
C-AB	27	519	0.052	27	0.1	7.315	A
C-A	843			843			
A-B	31			31			
A-C	894			894			

17:15 - 17:30

Stream	Total Demand (PCU/hr)	Capacity (PCU/hr)	RFC	Throughput (PCU/hr)	End queue (PCU)	Delay (s)	Unsignalised level of service
B-AC	83	294	0.281	82	0.4	17.118	C
C-AB	33	484	0.069	33	0.1	7.996	A
C-A	1032			1032			
A-B	39			39			
A-C	1096			1096			

17:30 - 17:45

Stream	Total Demand (PCU/hr)	Capacity (PCU/hr)	RFC	Throughput (PCU/hr)	End queue (PCU)	Delay (s)	Unsignalised level of service
B-AC	83	294	0.281	83	0.4	17.212	C
C-AB	33	484	0.069	33	0.1	7.997	A
C-A	1032			1032			
A-B	39			39			
A-C	1096			1096			

17:45 - 18:00

Stream	Total Demand (PCU/hr)	Capacity (PCU/hr)	RFC	Throughput (PCU/hr)	End queue (PCU)	Delay (s)	Unsignalised level of service
B-AC	67	354	0.191	68	0.2	12.781	B
C-AB	27	519	0.052	27	0.1	7.317	A
C-A	843			843			
A-B	31			31			
A-C	894			894			

18:00 - 18:15

Stream	Total Demand (PCU/hr)	Capacity (PCU/hr)	RFC	Throughput (PCU/hr)	End queue (PCU)	Delay (s)	Unsignalised level of service
B-AC	56	395	0.143	57	0.2	10.770	B
C-AB	23	546	0.041	23	0.0	6.882	A
C-A	706			706			
A-B	26			26			
A-C	749			749			

2025 + CD with Existing, Saturday

Data Errors and Warnings

No errors or warnings

Junction Network

Junctions

Junction	Name	Junction type	Major road direction	Use circulating lanes	Junction Delay (s)	Junction LOS
1	Site Access/ High Street	T-Junction	Two-way		1.70	A

Junction Network Options

Driving side	Lighting
Left	Normal/unknown

Traffic Demand

Demand Set Details

ID	Scenario name	Time Period name	Traffic profile type	Start time (HH:mm)	Finish time (HH:mm)	Time segment length (min)
D6	2025 + CD with Existing	Saturday	ONE HOUR	10:45	12:15	15

Vehicle mix source	PCU Factor for a HV (PCU)
HV Percentages	2.00

Demand overview (Traffic)

Arm	Linked arm	Use O-D data	Average Demand (PCU/hr)	Scaling Factor (%)
A - High Street S		✓	875	100.000
B - Site Access		✓	145	100.000
C - High Street N		✓	893	100.000

Origin-Destination Data

Demand (PCU/hr)

		To		
		A - High Street S	B - Site Access	C - High Street N
From	A - High Street S	0	89	786
	B - Site Access	73	0	72
	C - High Street N	820	73	0

Vehicle Mix

Heavy Vehicle Percentages

		To		
		A - High Street S	B - Site Access	C - High Street N
From	A - High Street S	0	0	3
	B - Site Access	0	0	0
	C - High Street N	4	1	0

Results

Results Summary for whole modelled period

Stream	Max RFC	Max Delay (s)	Max Queue (PCU)	Max LOS
B-AC	0.45	18.21	0.8	C
C-AB	0.16	8.11	0.2	A
C-A				
A-B				
A-C				

Main Results for each time segment

10:45 - 11:00

Stream	Total Demand (PCU/hr)	Capacity (PCU/hr)	RFC	Throughput (PCU/hr)	End queue (PCU)	Delay (s)	Unsignalised level of service
B-AC	109	442	0.247	108	0.3	10.719	B
C-AB	56	572	0.097	55	0.1	7.029	A
C-A	617			617			
A-B	67			67			
A-C	592			592			

11:00 - 11:15

Stream	Total Demand (PCU/hr)	Capacity (PCU/hr)	RFC	Throughput (PCU/hr)	End queue (PCU)	Delay (s)	Unsignalised level of service
B-AC	130	407	0.320	130	0.5	12.944	B
C-AB	67	554	0.121	67	0.1	7.469	A
C-A	736			736			
A-B	80			80			
A-C	707			707			

11:15 - 11:30

Stream	Total Demand (PCU/hr)	Capacity (PCU/hr)	RFC	Throughput (PCU/hr)	End queue (PCU)	Delay (s)	Unsignalised level of service
B-AC	160	357	0.447	158	0.8	17.992	C
C-AB	84	533	0.158	84	0.2	8.096	A
C-A	899			899			
A-B	98			98			
A-C	865			865			

11:30 - 11:45

Stream	Total Demand (PCU/hr)	Capacity (PCU/hr)	RFC	Throughput (PCU/hr)	End queue (PCU)	Delay (s)	Unsignalised level of service
B-AC	160	357	0.447	160	0.8	18.213	C
C-AB	84	533	0.158	84	0.2	8.105	A
C-A	899			899			
A-B	98			98			
A-C	865			865			

11:45 - 12:00

Stream	Total Demand (PCU/hr)	Capacity (PCU/hr)	RFC	Throughput (PCU/hr)	End queue (PCU)	Delay (s)	Unsignalised level of service
B-AC	130	407	0.320	132	0.5	13.118	B
C-AB	67	554	0.121	67	0.1	7.479	A
C-A	736			736			
A-B	80			80			
A-C	707			707			

12:00 - 12:15

Stream	Total Demand (PCU/hr)	Capacity (PCU/hr)	RFC	Throughput (PCU/hr)	End queue (PCU)	Delay (s)	Unsignalised level of service
B-AC	109	442	0.247	110	0.3	10.841	B
C-AB	56	572	0.097	56	0.1	7.046	A
C-A	617			617			
A-B	67			67			
A-C	592			592			

2025 + CD with Proposed Development, AM

Data Errors and Warnings

No errors or warnings

Junction Network

Junctions

Junction	Name	Junction type	Major road direction	Use circulating lanes	Junction Delay (s)	Junction LOS
1	Site Access/ High Street	T-Junction	Two-way		0.29	A

Junction Network Options

Driving side	Lighting
Left	Normal/unknown

Traffic Demand

Demand Set Details

ID	Scenario name	Time Period name	Traffic profile type	Start time (HH:mm)	Finish time (HH:mm)	Time segment length (min)
D7	2025 + CD with Proposed Development	AM	ONE HOUR	07:45	09:15	15

Vehicle mix source	PCU Factor for a HV (PCU)
HV Percentages	2.00

Demand overview (Traffic)

Arm	Linked arm	Use O-D data	Average Demand (PCU/hr)	Scaling Factor (%)
A - High Street S		✓	935	100.000
B - Site Access		✓	37	100.000
C - High Street N		✓	1003	100.000

Origin-Destination Data

Demand (PCU/hr)

		To		
		A - High Street S	B - Site Access	C - High Street N
From	A - High Street S	0	23	912
	B - Site Access	22	0	15
	C - High Street N	991	12	0

Vehicle Mix

Heavy Vehicle Percentages

		To		
		A - High Street S	B - Site Access	C - High Street N
From	A - High Street S	0	0	4
	B - Site Access	0	0	0
	C - High Street N	5	0	0

Results

Results Summary for whole modelled period

Stream	Max RFC	Max Delay (s)	Max Queue (PCU)	Max LOS
B-AC	0.13	13.24	0.1	B
C-AB	0.03	7.42	0.0	A
C-A				
A-B				
A-C				

Main Results for each time segment

07:45 - 08:00

Stream	Total Demand (PCU/hr)	Capacity (PCU/hr)	RFC	Throughput (PCU/hr)	End queue (PCU)	Delay (s)	Unsignalised level of service
B-AC	28	408	0.068	28	0.1	9.462	A
C-AB	9	558	0.016	9	0.0	6.558	A
C-A	746			746			
A-B	17			17			
A-C	687			687			

08:00 - 08:15

Stream	Total Demand (PCU/hr)	Capacity (PCU/hr)	RFC	Throughput (PCU/hr)	End queue (PCU)	Delay (s)	Unsignalised level of service
B-AC	33	369	0.090	33	0.1	10.729	B
C-AB	11	533	0.020	11	0.0	6.893	A
C-A	891			891			
A-B	21			21			
A-C	820			820			

08:15 - 08:30

Stream	Total Demand (PCU/hr)	Capacity (PCU/hr)	RFC	Throughput (PCU/hr)	End queue (PCU)	Delay (s)	Unsignalised level of service
B-AC	41	313	0.130	41	0.1	13.224	B
C-AB	13	499	0.027	13	0.0	7.415	A
C-A	1091			1091			
A-B	25			25			
A-C	1004			1004			

08:30 - 08:45

Stream	Total Demand (PCU/hr)	Capacity (PCU/hr)	RFC	Throughput (PCU/hr)	End queue (PCU)	Delay (s)	Unsignalised level of service
B-AC	41	313	0.130	41	0.1	13.242	B
C-AB	13	499	0.027	13	0.0	7.415	A
C-A	1091			1091			
A-B	25			25			
A-C	1004			1004			

08:45 - 09:00

Stream	Total Demand (PCU/hr)	Capacity (PCU/hr)	RFC	Throughput (PCU/hr)	End queue (PCU)	Delay (s)	Unsignalised level of service
B-AC	33	369	0.090	33	0.1	10.750	B
C-AB	11	533	0.020	11	0.0	6.894	A
C-A	891			891			
A-B	21			21			
A-C	820			820			

09:00 - 09:15

Stream	Total Demand (PCU/hr)	Capacity (PCU/hr)	RFC	Throughput (PCU/hr)	End queue (PCU)	Delay (s)	Unsignalised level of service
B-AC	28	408	0.068	28	0.1	9.481	A
C-AB	9	558	0.016	9	0.0	6.558	A
C-A	746			746			
A-B	17			17			
A-C	687			687			

2025 + CD with Proposed Development, PM

Data Errors and Warnings

No errors or warnings

Junction Network

Junctions

Junction	Name	Junction type	Major road direction	Use circulating lanes	Junction Delay (s)	Junction LOS
1	Site Access/ High Street	T-Junction	Two-way		0.30	A

Junction Network Options

Driving side	Lighting
Left	Normal/unknown

Traffic Demand

Demand Set Details

ID	Scenario name	Time Period name	Traffic profile type	Start time (HH:mm)	Finish time (HH:mm)	Time segment length (min)
D8	2025 + CD with Proposed Development	PM	ONE HOUR	16:45	18:15	15

Vehicle mix source	PCU Factor for a HV (PCU)
HV Percentages	2.00

Demand overview (Traffic)

Arm	Linked arm	Use O-D data	Average Demand (PCU/hr)	Scaling Factor (%)
A - High Street S		✓	1024	100.000
B - Site Access		✓	32	100.000
C - High Street N		✓	957	100.000

Origin-Destination Data

Demand (PCU/hr)

		To		
		A - High Street S	B - Site Access	C - High Street N
From	A - High Street S	0	29	995
	B - Site Access	20	0	12
	C - High Street N	938	19	0

Vehicle Mix

Heavy Vehicle Percentages

		To		
		A - High Street S	B - Site Access	C - High Street N
From	A - High Street S	0	0	3
	B - Site Access	0	0	0
	C - High Street N	3	0	0

Results

Results Summary for whole modelled period

Stream	Max RFC	Max Delay (s)	Max Queue (PCU)	Max LOS
B-AC	0.12	13.98	0.1	B
C-AB	0.04	7.81	0.0	A
C-A				
A-B				
A-C				

Main Results for each time segment

16:45 - 17:00

Stream	Total Demand (PCU/hr)	Capacity (PCU/hr)	RFC	Throughput (PCU/hr)	End queue (PCU)	Delay (s)	Unsignalised level of service
B-AC	24	393	0.061	24	0.1	9.752	A
C-AB	14	546	0.026	14	0.0	6.768	A
C-A	706			706			
A-B	22			22			
A-C	749			749			

17:00 - 17:15

Stream	Total Demand (PCU/hr)	Capacity (PCU/hr)	RFC	Throughput (PCU/hr)	End queue (PCU)	Delay (s)	Unsignalised level of service
B-AC	29	351	0.082	29	0.1	11.148	B
C-AB	17	519	0.033	17	0.0	7.174	A
C-A	843			843			
A-B	26			26			
A-C	894			894			

17:15 - 17:30

Stream	Total Demand (PCU/hr)	Capacity (PCU/hr)	RFC	Throughput (PCU/hr)	End queue (PCU)	Delay (s)	Unsignalised level of service
B-AC	35	293	0.120	35	0.1	13.959	B
C-AB	21	482	0.044	21	0.0	7.810	A
C-A	1033			1033			
A-B	32			32			
A-C	1096			1096			

17:30 - 17:45

Stream	Total Demand (PCU/hr)	Capacity (PCU/hr)	RFC	Throughput (PCU/hr)	End queue (PCU)	Delay (s)	Unsignalised level of service
B-AC	35	293	0.120	35	0.1	13.978	B
C-AB	21	482	0.044	21	0.0	7.812	A
C-A	1033			1033			
A-B	32			32			
A-C	1096			1096			

17:45 - 18:00

Stream	Total Demand (PCU/hr)	Capacity (PCU/hr)	RFC	Throughput (PCU/hr)	End queue (PCU)	Delay (s)	Unsignalised level of service
B-AC	29	351	0.082	29	0.1	11.167	B
C-AB	17	519	0.033	17	0.0	7.176	A
C-A	843			843			
A-B	26			26			
A-C	894			894			

18:00 - 18:15

Stream	Total Demand (PCU/hr)	Capacity (PCU/hr)	RFC	Throughput (PCU/hr)	End queue (PCU)	Delay (s)	Unsignalised level of service
B-AC	24	393	0.061	24	0.1	9.774	A
C-AB	14	546	0.026	14	0.0	6.772	A
C-A	706			706			
A-B	22			22			
A-C	749			749			

2025 + CD with Proposed Development, Saturday

Data Errors and Warnings

No errors or warnings

Junction Network

Junctions

Junction	Name	Junction type	Major road direction	Use circulating lanes	Junction Delay (s)	Junction LOS
1	Site Access/ High Street	T-Junction	Two-way		0.22	A

Junction Network Options

Driving side	Lighting
Left	Normal/unknown

Traffic Demand

Demand Set Details

ID	Scenario name	Time Period name	Traffic profile type	Start time (HH:mm)	Finish time (HH:mm)	Time segment length (min)
D9	2025 + CD with Proposed Development	Saturday	ONE HOUR	10:45	12:15	15

Vehicle mix source	PCU Factor for a HV (PCU)
HV Percentages	2.00

Demand overview (Traffic)

Arm	Linked arm	Use O-D data	Average Demand (PCU/hr)	Scaling Factor (%)
A - High Street S		✓	801	100.000
B - Site Access		✓	27	100.000
C - High Street N		✓	829	100.000

Origin-Destination Data

Demand (PCU/hr)

		To		
		A - High Street S	B - Site Access	C - High Street N
From	A - High Street S	0	15	786
	B - Site Access	17	0	10
	C - High Street N	820	9	0

Vehicle Mix

Heavy Vehicle Percentages

		To		
		A - High Street S	B - Site Access	C - High Street N
From	A - High Street S	0	0	3
	B - Site Access	0	0	0
	C - High Street N	4	1	0

Results

Results Summary for whole modelled period

Stream	Max RFC	Max Delay (s)	Max Queue (PCU)	Max LOS
B-AC	0.08	11.15	0.1	B
C-AB	0.02	7.05	0.0	A
C-A				
A-B				
A-C				

Main Results for each time segment

10:45 - 11:00

Stream	Total Demand (PCU/hr)	Capacity (PCU/hr)	RFC	Throughput (PCU/hr)	End queue (PCU)	Delay (s)	Unsignalised level of service
B-AC	20	431	0.047	20	0.0	8.749	A
C-AB	7	576	0.012	7	0.0	6.382	A
C-A	617			617			
A-B	11			11			
A-C	592			592			

11:00 - 11:15

Stream	Total Demand (PCU/hr)	Capacity (PCU/hr)	RFC	Throughput (PCU/hr)	End queue (PCU)	Delay (s)	Unsignalised level of service
B-AC	24	399	0.061	24	0.1	9.612	A
C-AB	8	555	0.015	8	0.0	6.648	A
C-A	737			737			
A-B	13			13			
A-C	707			707			

11:15 - 11:30

Stream	Total Demand (PCU/hr)	Capacity (PCU/hr)	RFC	Throughput (PCU/hr)	End queue (PCU)	Delay (s)	Unsignalised level of service
B-AC	30	352	0.084	30	0.1	11.146	B
C-AB	10	525	0.019	10	0.0	7.053	A
C-A	903			903			
A-B	17			17			
A-C	865			865			

11:30 - 11:45

Stream	Total Demand (PCU/hr)	Capacity (PCU/hr)	RFC	Throughput (PCU/hr)	End queue (PCU)	Delay (s)	Unsignalised level of service
B-AC	30	352	0.084	30	0.1	11.153	B
C-AB	10	525	0.019	10	0.0	7.053	A
C-A	903			903			
A-B	17			17			
A-C	865			865			

11:45 - 12:00

Stream	Total Demand (PCU/hr)	Capacity (PCU/hr)	RFC	Throughput (PCU/hr)	End queue (PCU)	Delay (s)	Unsignalised level of service
B-AC	24	399	0.061	24	0.1	9.620	A
C-AB	8	555	0.015	8	0.0	6.651	A
C-A	737			737			
A-B	13			13			
A-C	707			707			

12:00 - 12:15

Stream	Total Demand (PCU/hr)	Capacity (PCU/hr)	RFC	Throughput (PCU/hr)	End queue (PCU)	Delay (s)	Unsignalised level of service
B-AC	20	431	0.047	20	0.0	8.761	A
C-AB	7	576	0.012	7	0.0	6.385	A
C-A	617			617			
A-B	11			11			
A-C	592			592			

Junction 1

Scenario 1: '2019 Baseline AM' (FG1: '2019 Baseline AM', Plan 2: 'Network Control Plan 2')

Network Layout Diagram

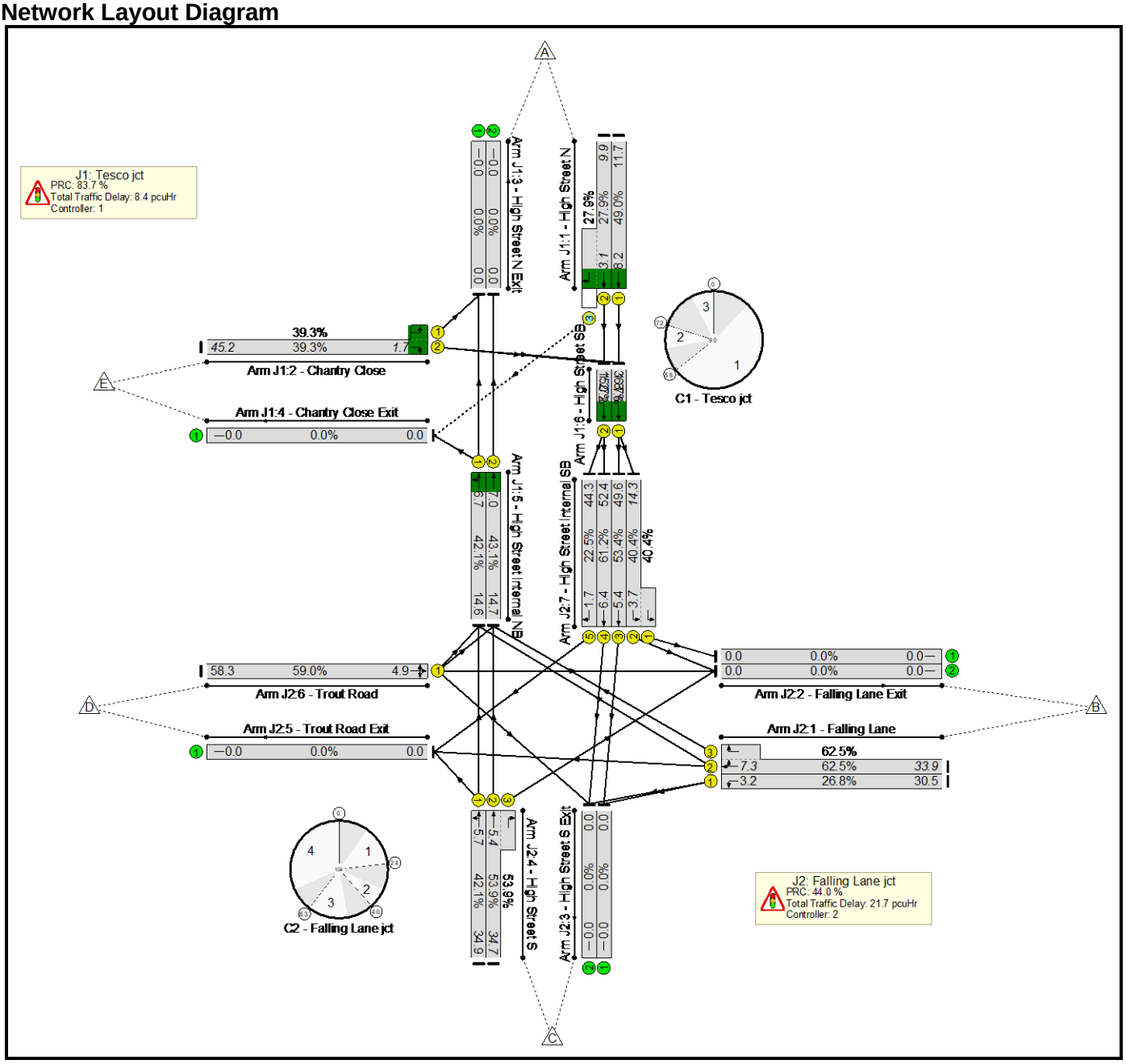

Phase Diagram
C1 - Tesco jct

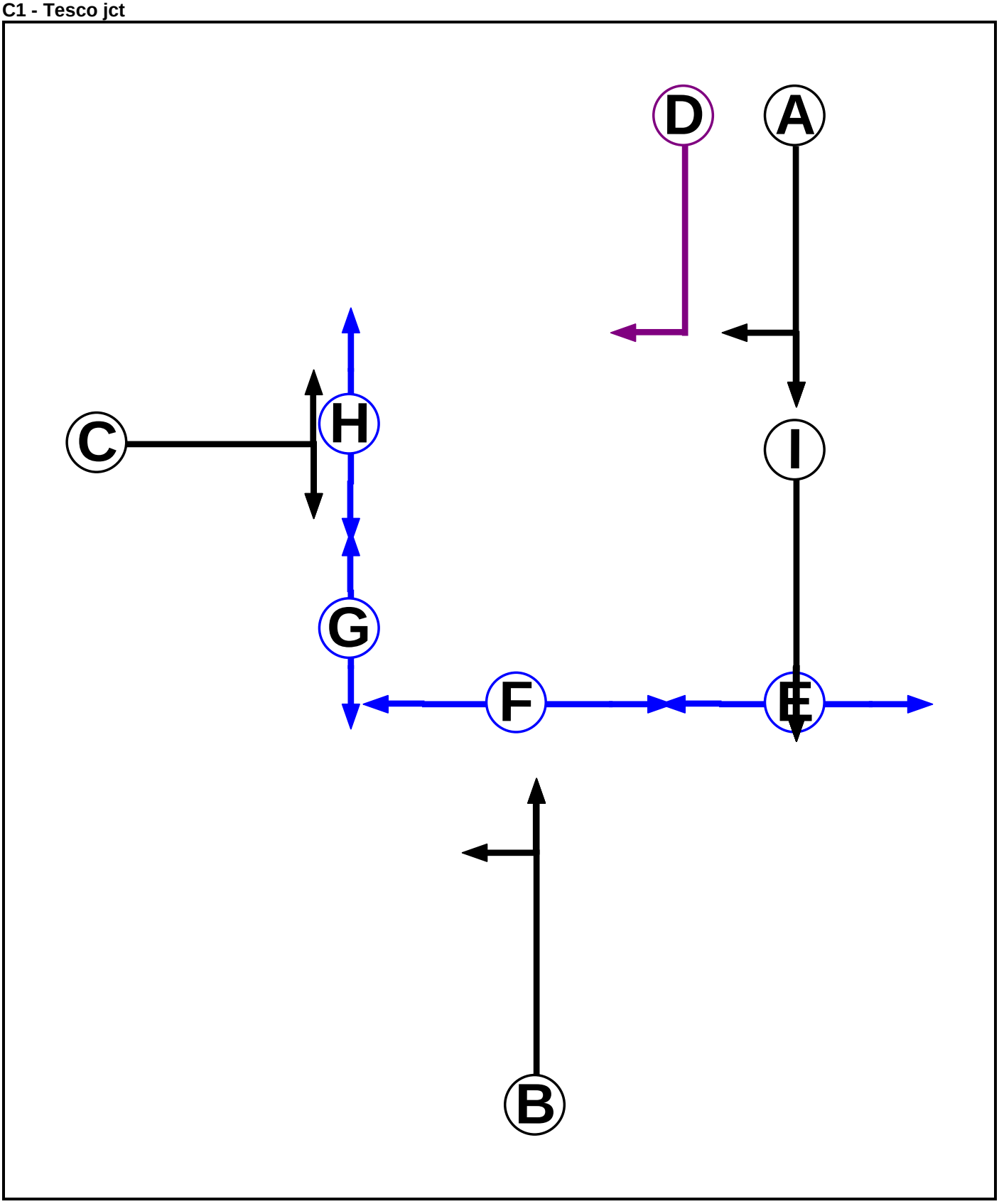

C2 - Falling Lane jct

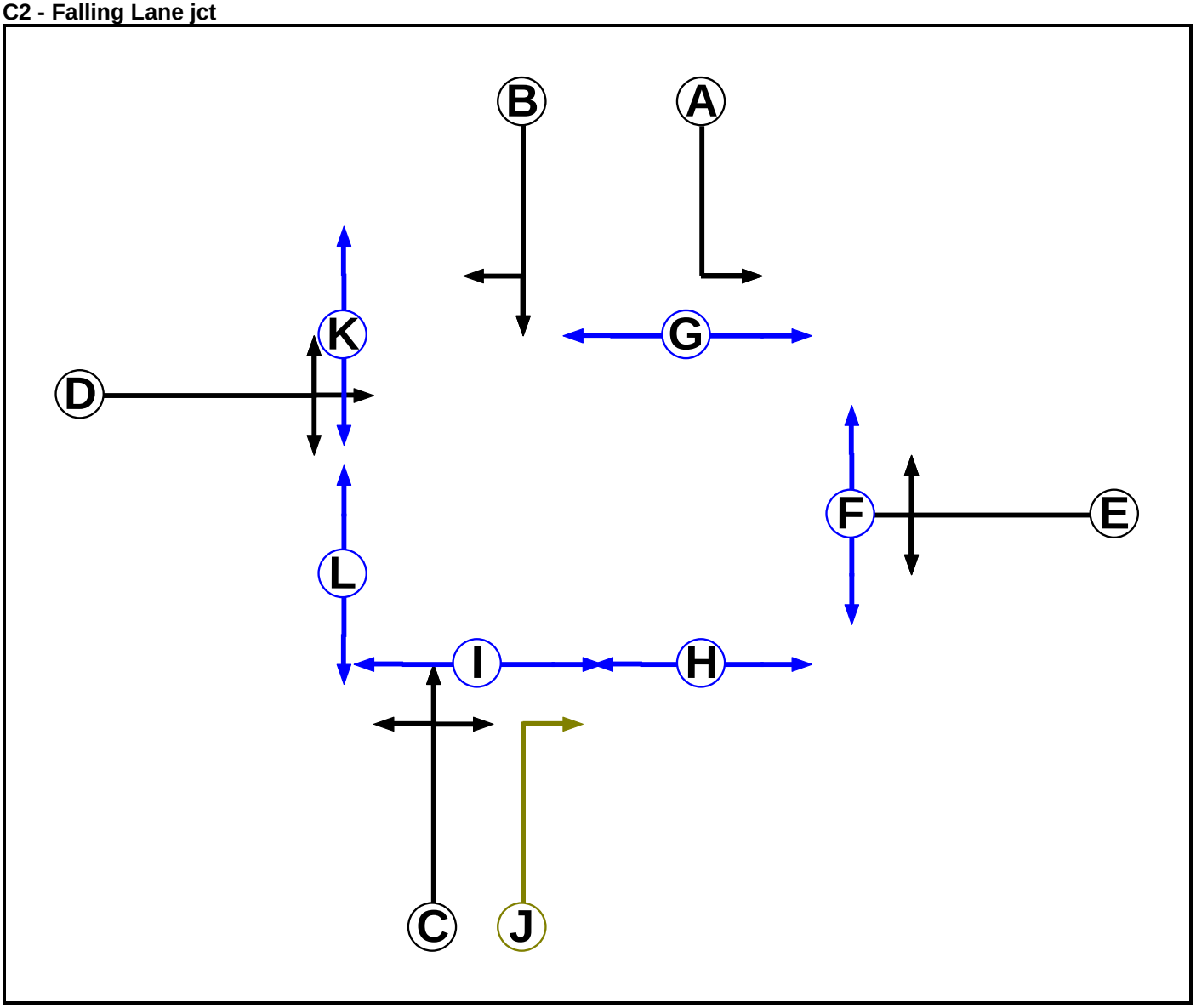

Phase Intergreens Matrix

C1 - Tesco jct

Terminating Phase \ Starting Phase	A	B	C	D	E	F	G	H	I
A		-	5	-	-	-	10	-	-
B	-		6	5	-	7	8	-	-
C	5	5		5	-	-	-	5	-
D	-	6	5		-	-	10	-	-
E	-	-	-	-		-	-	-	10
F	-	11	-	-	-		-	-	-
G	11	11	-	11	-	-		-	-
H	-	-	11	-	-	-	-		-
I	-	-	-	-	5	-	-	-	

C2 - Falling Lane jct

Terminating Phase \ Starting Phase	A	B	C	D	E	F	G	H	I	J	K	L
A		-	-	5	-	-	5	-	-	5	-	-
B	-		-	5	7	-	-	9	-	5	-	10
C	-	-		7	5	-	-	-	6	-	-	9
D	7	6	6		8	8	-	12	-	5	5	-
E	-	6	6	8		5	-	8	-	5	-	9
F	-	-	-	18	18		-	-	-	18	-	-
G	8	-	-	-	-	-		-	-	-	-	-
H	-	9	-	9	9	-	-		-	-	-	-
I	-	-	10	-	-	-	-	-		10	-	-
J	9	8	-	5	6	10	-	-	6		-	-
K	-	-	-	8	-	-	-	-	-	-		-
L	-	8	8	-	8	-	-	-	-	-	-	

Lane Input Data

Junction: J1: Tesco jct

Lane	Lane Type	Phases	Start Disp.	End Disp.	Physical Length (PCU)	Sat Flow Type	Def User Saturation Flow (PCU/Hr)	Lane Width (m)	Gradient	Nearside Lane	Turns	Turning Radius (m)
J1:1/1 (High Street N)	U	A	2	3	60.0	Geom	-	2.90	0.00	Y	Arm J1:6 Ahead	Inf
J1:1/2 (High Street N)	U	A	2	3	60.0	Geom	-	2.90	0.00	Y	Arm J1:6 Ahead	Inf

J1:1/3 (High Street N)	O	A D	2	3	6.1	Geom	-	2.90	0.00	Y	Arm J1:4 Right	8.74
J1:2/1 (Chantry Close)	U	C	2	3	1.7	Geom	-	3.00	0.00	Y	Arm J1:3 Left	5.50
J1:2/2 (Chantry Close)	U	C	2	3	60.0	Geom	-	3.00	0.00	Y	Arm J1:6 Right	11.40
J1:3/1 (High Street N Exit)	U		2	3	60.0	Inf	-	-	-	-	-	-
J1:3/2 (High Street N Exit)	U		2	3	60.0	Inf	-	-	-	-	-	-
J1:4/1 (Chantry Close Exit)	U		2	3	60.0	Inf	-	-	-	-	-	-
J1:5/1 (High Street internal NB)	U	B	2	3	13.6	Geom	-	3.00	0.00	Y	Arm J1:3 Ahead Arm J1:4 Left	Inf 12.70
J1:5/2 (High Street internal NB)	U	B	2	3	13.6	Geom	-	3.00	0.00	Y	Arm J1:3 Ahead	Inf
J1:6/1 (High Street SB)	U	I	2	3	2.1	Geom	-	3.25	0.00	Y	Arm J2:7 Ahead	Inf
J1:6/2 (High Street SB)	U	I	2	3	2.1	Geom	-	3.25	0.00	Y	Arm J2:7 Ahead	Inf

Junction: J2: Falling Lane jct

Lane	Lane Type	Phases	Start Disp.	End Disp.	Physical Length (PCU)	Sat Flow Type	Def User Saturation Flow (PCU/Hr)	Lane Width (m)	Gradient	Nearside Lane	Turns	Turning Radius (m)
J2:1/1 (Falling Lane)	U	E	2	3	60.0	Geom	-	3.20	0.00	Y	Arm J2:3 Left	7.70
J2:1/2 (Falling Lane)	U	E	2	3	12.5	Geom	-	3.20	0.00	Y	Arm J2:5 Ahead	Inf
											Arm J1:5 Right	16.00
J2:1/3 (Falling Lane)	U	E	2	3	4.0	Geom	-	3.18	0.00	Y	Arm J1:5 Right	13.30
J2:2/1 (Falling Lane Exit)	U		2	3	60.0	Inf	-	-	-	-	-	-
J2:2/2 (Falling Lane Exit)	U		2	3	60.0	Inf	-	-	-	-	-	-
J2:3/1 (High Street S Exit)	U		2	3	60.0	Inf	-	-	-	-	-	-
J2:3/2 (High Street S Exit)	U		2	3	60.0	Inf	-	-	-	-	-	-
J2:4/1 (High Street S)	U	C	2	3	60.0	Geom	-	2.50	0.00	Y	Arm J2:5 Left	9.80
											Arm J1:5 Ahead	Inf
J2:4/2 (High Street S)	U	C	2	3	4.0	Geom	-	2.51	0.00	Y	Arm J1:5 Ahead	Inf
J2:4/3 (High Street S)	U	C J	2	3	4.0	Geom	-	2.55	0.00	Y	Arm J2:2 Right	12.20
J2:5/1 (Trout Road Exit)	U		2	3	60.0	Inf	-	-	-	-	-	-
J2:6/1 (Trout Road)	U	D	2	3	60.0	Geom	-	3.70	0.00	Y	Arm J2:2 Ahead	Inf
											Arm J2:3 Right	17.50
											Arm J1:5 Left	8.16
J2:7/1 (High Street internal SB)	U	A	2	3	4.0	Geom	-	3.00	0.00	Y	Arm J2:2 Left	23.50
J2:7/2 (High Street internal SB)	U	A	2	3	12.2	Geom	-	3.00	0.00	Y	Arm J2:2 Left	31.30

J2:7/3 (High Street internal SB)	U	B	2	3	12.2	Geom	-	2.80	0.00	Y	Arm J2:3 Ahead	Inf
J2:7/4 (High Street internal SB)	U	B	2	3	12.2	Geom	-	2.80	0.00	Y	Arm J2:3 Ahead	Inf
J2:7/5 (High Street internal SB)	U	B	2	3	12.2	Geom	-	2.80	0.00	Y	Arm J2:5 Right	7.50

Lane Saturation Flows

Junction: J1: Tesco jct								
Lane	**Lane Width (m)**	**Gradient**	**Nearside Lane**	**Allowed Turns**	**Turning Radius (m)**	**Turning Prop.**	**Sat Flow (PCU/Hr)**	**Flared Sat Flow (PCU/Hr)**
J1:1/1 (High Street N)	2.90	0.00	Y	Arm J1:6 Ahead	Inf	100.0 %	1905	1905
J1:1/2 (High Street N)	2.90	0.00	Y	Arm J1:6 Ahead	Inf	100.0 %	1905	1905
J1:1/3 (High Street N)	2.90	0.00	Y	Arm J1:4 Right	8.74	100.0 %	1626	1626
J1:2/1 (Chantry Close)	3.00	0.00	Y	Arm J1:3 Left	5.50	100.0 %	1505	1505
J1:2/2 (Chantry Close)	3.00	0.00	Y	Arm J1:6 Right	11.40	100.0 %	1692	1692
J1:3/1 (High Street N Exit Lane 1)	Infinite Saturation Flow						Inf	Inf
J1:3/2 (High Street N Exit Lane 2)	Infinite Saturation Flow						Inf	Inf
J1:4/1 (Chantry Close Exit Lane 1)	Infinite Saturation Flow						Inf	Inf
J1:5/1 (High Street internal NB)	3.00	0.00	Y	Arm J1:3 Ahead	Inf	77.5 %	1865	1865
				Arm J1:4 Left	12.70	22.5 %		
J1:5/2 (High Street internal NB)	3.00	0.00	Y	Arm J1:3 Ahead	Inf	100.0 %	1915	1915
J1:6/1 (High Street SB)	3.25	0.00	Y	Arm J2:7 Ahead	Inf	100.0 %	1940	1940
J1:6/2 (High Street SB)	3.25	0.00	Y	Arm J2:7 Ahead	Inf	100.0 %	1940	1940

Junction: J2: Falling Lane jct

Lane	Lane Width (m)	Gradient	Nearside Lane	Allowed Turns	Turning Radius (m)	Turning Prop.	Sat Flow (PCU/Hr)	Flared Sat Flow (PCU/Hr)
J2:1/1 (Falling Lane)	3.20	0.00	Y	Arm J2:3 Left	7.70	100.0 %	1620	1620
J2:1/2 (Falling Lane)	3.20	0.00	Y	Arm J2:5 Ahead	Inf	19.7 %	1799	1799
				Arm J1:5 Right	16.00	80.3 %		
J2:1/3 (Falling Lane)	3.18	0.00	Y	Arm J1:5 Right	13.30	100.0 %	1737	1737
J2:2/1 (Falling Lane Exit Lane 1)	Infinite Saturation Flow						Inf	Inf
J2:2/2 (Falling Lane Exit Lane 2)	Infinite Saturation Flow						Inf	Inf
J2:3/1 (High Street S Exit Lane 1)	Infinite Saturation Flow						Inf	Inf
J2:3/2 (High Street S Exit Lane 2)	Infinite Saturation Flow						Inf	Inf
J2:4/1 (High Street S)	2.50	0.00	Y	Arm J2:5 Left	9.80	3.4 %	1855	1855
				Arm J1:5 Ahead	Inf	96.6 %		
J2:4/2 (High Street S)	2.51	0.00	Y	Arm J1:5 Ahead	Inf	100.0 %	1866	1866
J2:4/3 (High Street S)	2.55	0.00	Y	Arm J2:2 Right	12.20	100.0 %	1665	1665
J2:5/1 (Trout Road Exit Lane 1)	Infinite Saturation Flow						Inf	Inf
J2:6/1 (Trout Road)	3.70	0.00	Y	Arm J2:2 Ahead	Inf	41.6 %	1809	1809
				Arm J2:3 Right	17.50	10.4 %		
				Arm J1:5 Left	8.16	48.1 %		
J2:7/1 (High Street internal SB)	3.00	0.00	Y	Arm J2:2 Left	23.50	100.0 %	1800	1800
J2:7/2 (High Street internal SB)	3.00	0.00	Y	Arm J2:2 Left	31.30	100.0 %	1827	1827
J2:7/3 (High Street internal SB)	2.80	0.00	Y	Arm J2:3 Ahead	Inf	100.0 %	1895	1895
J2:7/4 (High Street internal SB)	2.80	0.00	Y	Arm J2:3 Ahead	Inf	100.0 %	1895	1895
J2:7/5 (High Street internal SB)	2.80	0.00	Y	Arm J2:5 Right	7.50	100.0 %	1579	1579

Lane Connector Input Data

Junction: J1: Tesco jct				
Org Lane	**Dest Lane**	**Junction**	**Mean Cruise Time**	**Platoon Dispersion**
J1:1/1	J1:6/1	Internal	3	35
J1:1/2	J1:6/2	Internal	3	35
J1:1/3	J1:4/1	Internal	5	35
J2:1/2	J1:5/1	Entering	12	35
J2:1/3	J1:5/2	Entering	12	35
J1:2/1	J1:3/1	Internal	5	35
J1:2/2	J1:6/1	Internal	4	35
J1:2/2	J1:6/2	Internal	4	35
J2:4/1	J1:5/1	Entering	12	35
J2:4/2	J1:5/2	Entering	12	35
J2:6/1	J1:5/1	Entering	10	35
J2:6/1	J1:5/2	Entering	10	35
J1:5/1	J1:3/1	Internal	5	35
J1:5/1	J1:4/1	Internal	5	35
J1:5/2	J1:3/2	Internal	5	35
J1:6/1	J2:7/2	Leaving	8	35
J1:6/1	J2:7/3	Leaving	8	35
J1:6/2	J2:7/4	Leaving	8	35
J1:6/2	J2:7/5	Leaving	8	35

Junction: J2: Falling Lane jct				
Org Lane	**Dest Lane**	**Junction**	**Mean Cruise Time**	**Platoon Dispersion**
J2:1/1	J2:3/1	Internal	5	35
J2:1/1	J2:3/2	Internal	5	35
J2:1/2	J2:5/1	Internal	5	35
J2:1/2	J1:5/1	Leaving	12	35
J2:1/3	J1:5/2	Leaving	12	35
J2:4/1	J2:5/1	Internal	5	35
J2:4/1	J1:5/1	Leaving	12	35
J2:4/2	J1:5/2	Leaving	12	35
J2:4/3	J2:2/2	Internal	5	35
J2:6/1	J2:2/2	Internal	5	35
J2:6/1	J2:3/2	Internal	5	35
J2:6/1	J1:5/1	Leaving	10	35
J2:6/1	J1:5/2	Leaving	10	35
J2:7/1	J2:2/1	Internal	5	35
J2:7/2	J2:2/2	Internal	5	35
J2:7/3	J2:3/1	Internal	5	35
J2:7/4	J2:3/2	Internal	5	35
J2:7/5	J2:5/1	Internal	5	35
J1:6/1	J2:7/2	Entering	8	35
J1:6/1	J2:7/3	Entering	8	35
J1:6/2	J2:7/4	Entering	8	35
J1:6/2	J2:7/5	Entering	8	35

Stage Sequence Diagram

C1 - Tesco jct

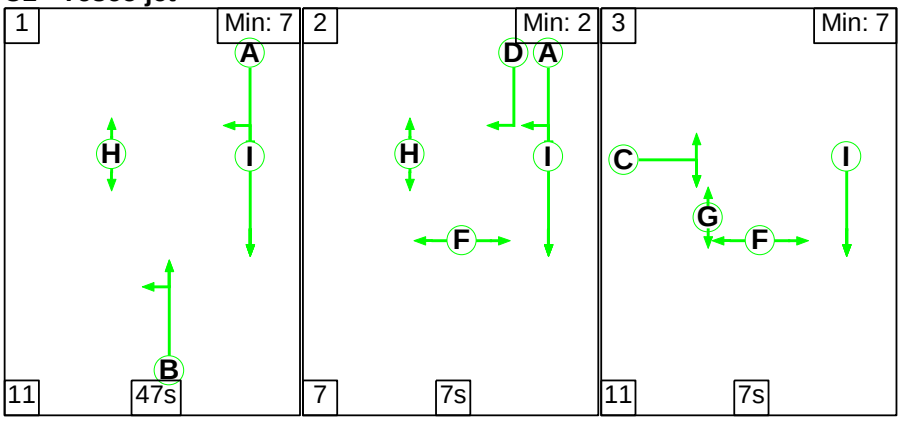

C2 - Falling Lane jct

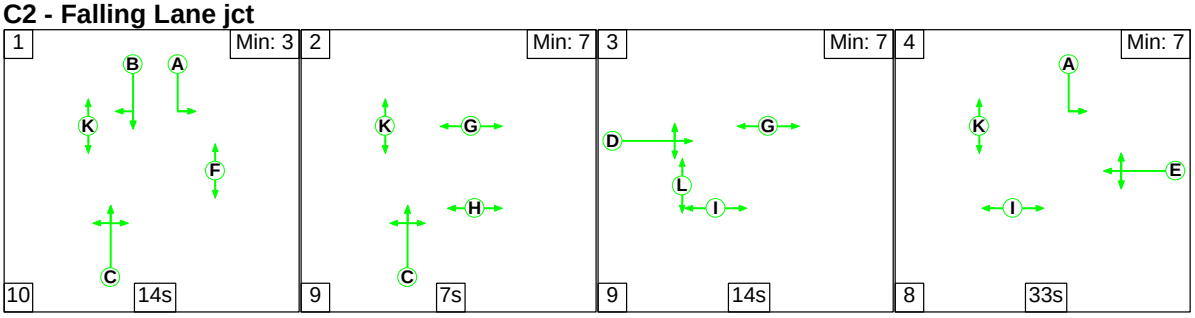

Signal Timings Diagram

C1 - Tesco jct

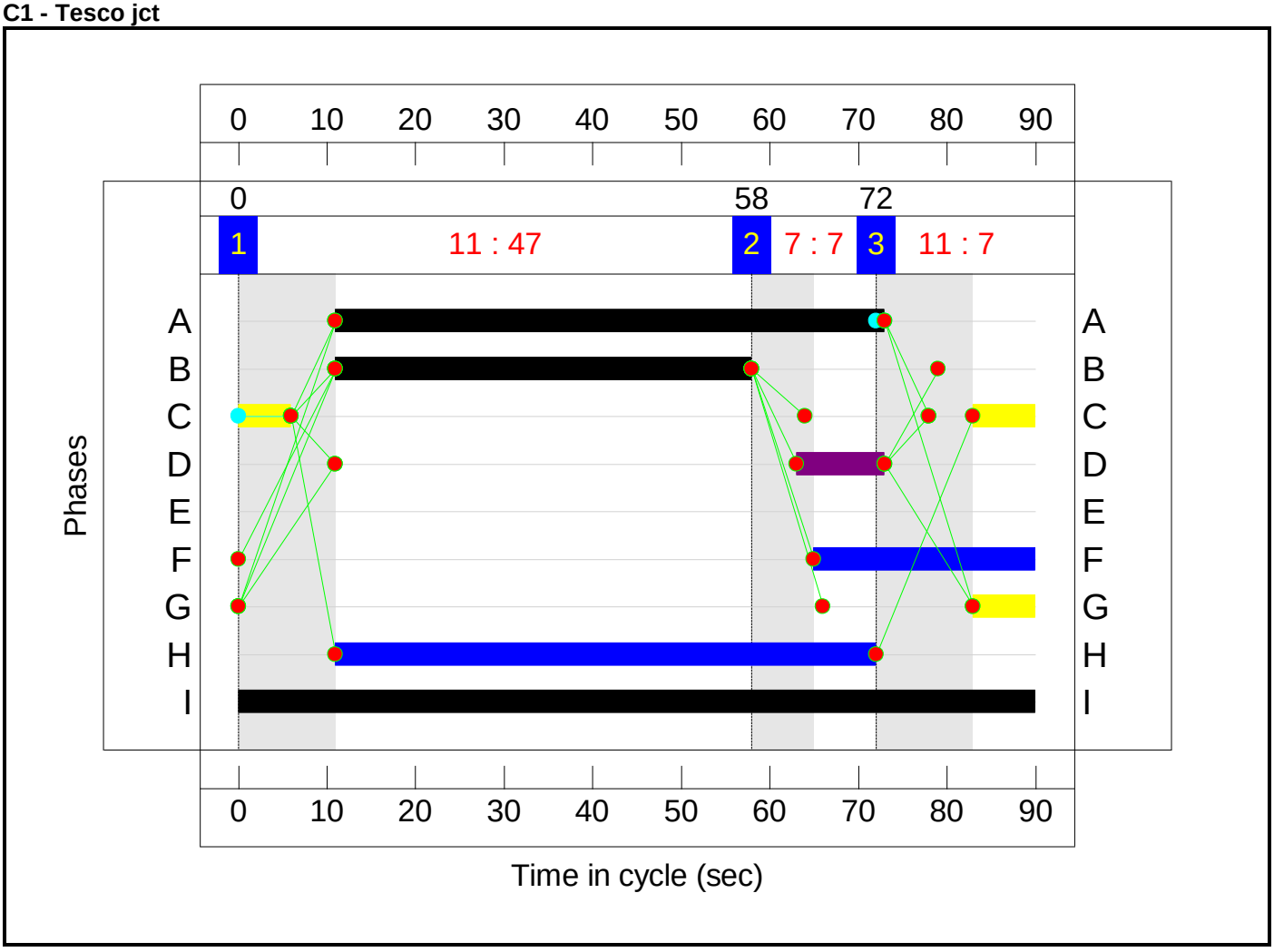

C2 - Falling Lane jct

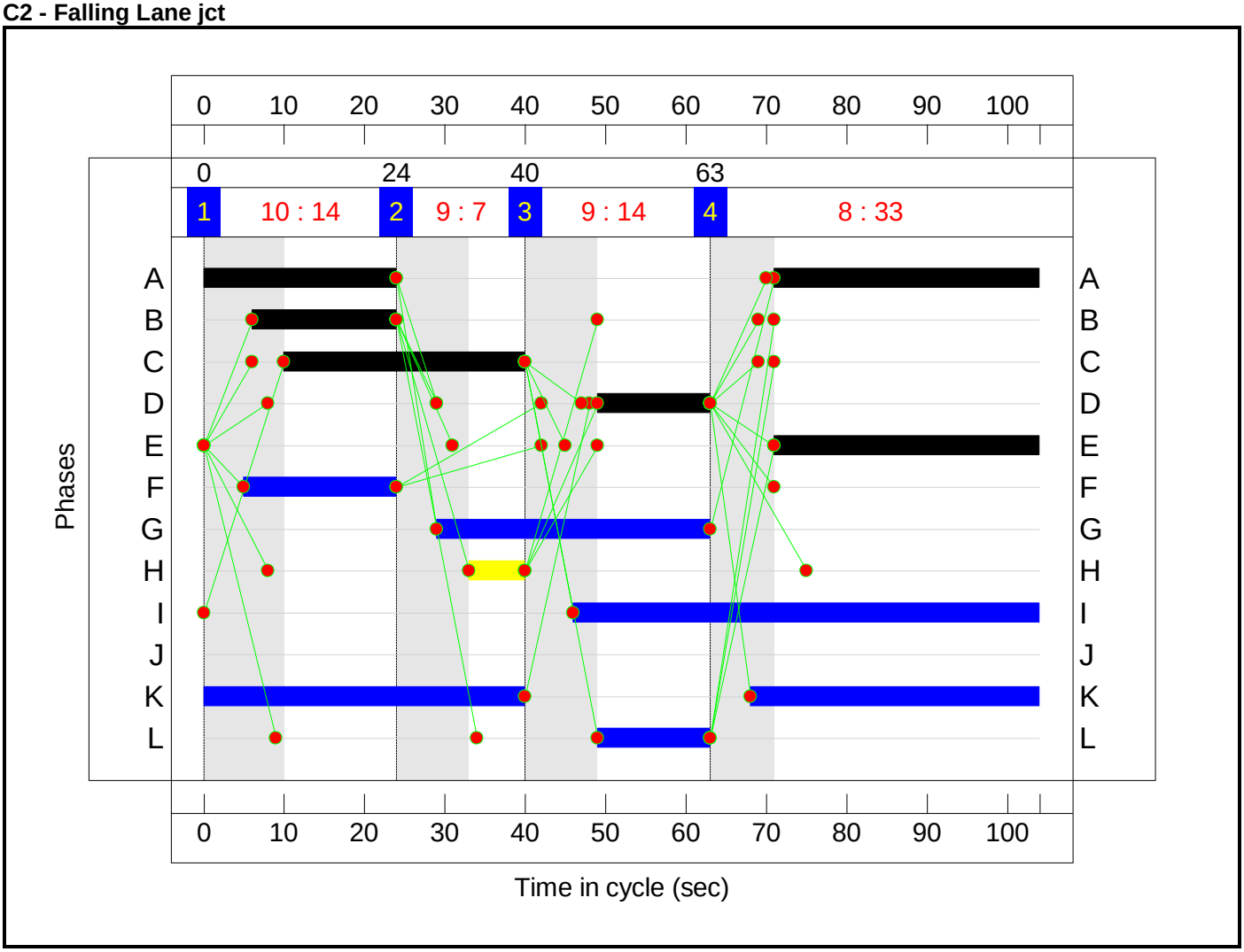

Network Results

Item	Lane Description	Lane Type	Full Phase	Arrow Phase	Num Greens	Total Green (s)	Arrow Green (s)	Demand Flow (pcu)	Sat Flow (pcu/Hr)	Capacity (pcu)	Deg Sat (%)	Turners In Gaps (pcu)	Turners When Unopposed (pcu)	Turners In Intergreen (pcu)	Total Delay (pcuHr)	Av. Delay Per PCU (s/pcu)	Mean Max Queue (pcu)
Network: Chantry Close/High Street	**-**	**-**	**-**		**-**	**-**	**-**	**-**	**-**	**-**	**62.5%**	**67**	**10**	**2**	**30.1**	**-**	**-**
J1: Tesco jct	**-**	**-**	**-**		**-**	**-**	**-**	**-**	**-**	**-**	**49.0%**	**67**	**10**	**2**	**8.4**	**-**	**-**
1/1	High Street N Ahead	U	C1:A		1	62	-	591	1905	1207	49.0%	-	-	-	1.9	11.7	8.2
1/2+1/3	High Street N Right Ahead	U+O	C1:A	C1:D	1	62	10	349	1905:1626	971+279	27.9 : 27.9%	67	10	2	1.0	9.9	3.1
2/2+2/1	Chantry Close Left Right	U	C1:C		1	13	-	115	1692:1505	160+132	39.3 : 39.3%	-	-	-	1.4	45.2	1.7
5/1	High Street internal NB Ahead Left	U	C1:B		1	47	-	436	1865	1036	42.1%	-	-	-	1.8	14.6	6.7
5/2	High Street internal NB Ahead	U	C1:B		1	47	-	459	1915	1064	43.1%	-	-	-	1.9	14.7	7.0
6/1	High Street SB Ahead	U	C1:I		1	90	-	648	1940	1768	36.7%	-	-	-	0.3	1.8	1.6
6/2	High Street SB Ahead	U	C1:I		1	90	-	277	1940	1768	15.7%	-	-	-	0.1	1.2	0.2
J2: Falling Lane jct	**-**	**-**	**-**		**-**	**-**	**-**	**-**	**-**	**-**	**62.5%**	**0**	**0**	**0**	**21.7**	**-**	**-**
1/1	Falling Lane Left	U	C2:E		1	33	-	142	1620	530	26.8%	-	-	-	1.2	30.5	3.2
1/2+1/3	Falling Lane Ahead Right	U	C2:E		1	33	-	444	1799:1737	366+344	62.5 : 62.5%	-	-	-	4.2	33.9	7.3
4/1	High Street S Left Ahead	U	C2:C		1	30	-	233	1855	553	42.1%	-	-	-	2.3	34.9	5.7
4/2+4/3	High Street S Right Ahead	U	C2:C	C2:J	1	30	0	341	1866:1665	365+267	53.9 : 53.9%	-	-	-	3.3	34.7	5.4

6/1	Trout Road Ahead Right Left	U	C2:D		1	14	-	154	1809	261	59.0%	-	-	-	2.5	58.3	4.9
7/2+7/1	High Street internal SB Left	U	C2:A		1	57	-	463	1827:1800	577+570	40.4 : 40.4%	-	-	-	1.8	14.3	3.7
7/3	High Street internal SB Ahead	U	C2:B		1	18	-	185	1895	346	53.4%	-	-	-	2.5	49.6	5.4
7/4	High Street internal SB Ahead	U	C2:B		1	18	-	212	1895	346	61.2%	-	-	-	3.1	52.4	6.4
7/5	High Street internal SB Right	U	C2:B		1	18	-	65	1579	288	22.5%	-	-	-	0.8	44.3	1.7

C1 - Tesco jct	PRC for Signalled Lanes (%):	83.7	Total Delay for Signalled Lanes (pcuHr):	8.38	Cycle Time (s): 90
C2 - Falling Lane jct	PRC for Signalled Lanes (%):	44.0	Total Delay for Signalled Lanes (pcuHr):	21.69	Cycle Time (s): 104
	PRC Over All Lanes (%):	44.0	Total Delay Over All Lanes(pcuHr):	30.07	

Scenario 2: '2019 Baseline PM' (FG2: '2019 Baseline PM', Plan 2: 'Network Control Plan 2')

Network Layout Diagram

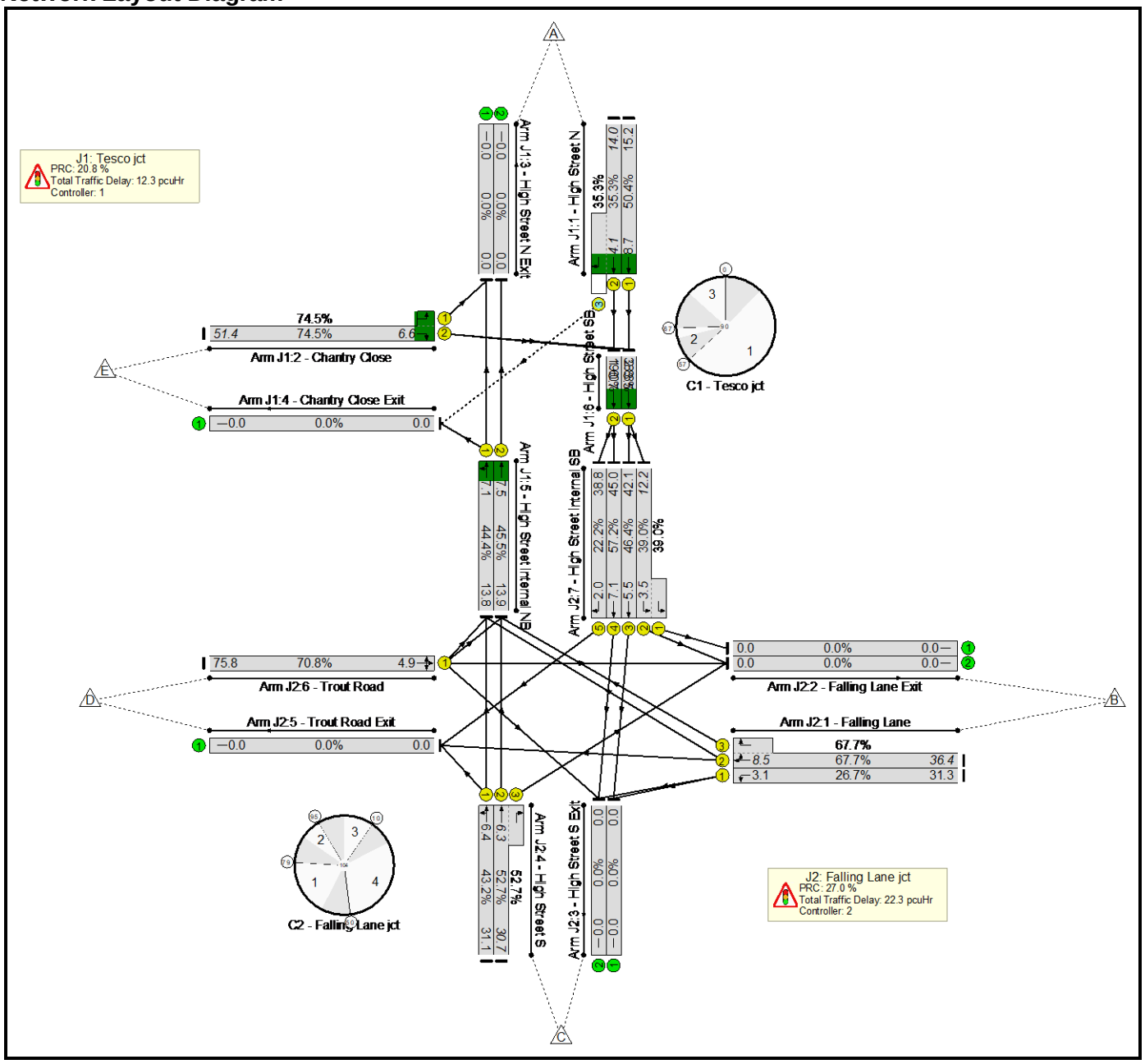

Phase Diagram
C1 - Tesco jct

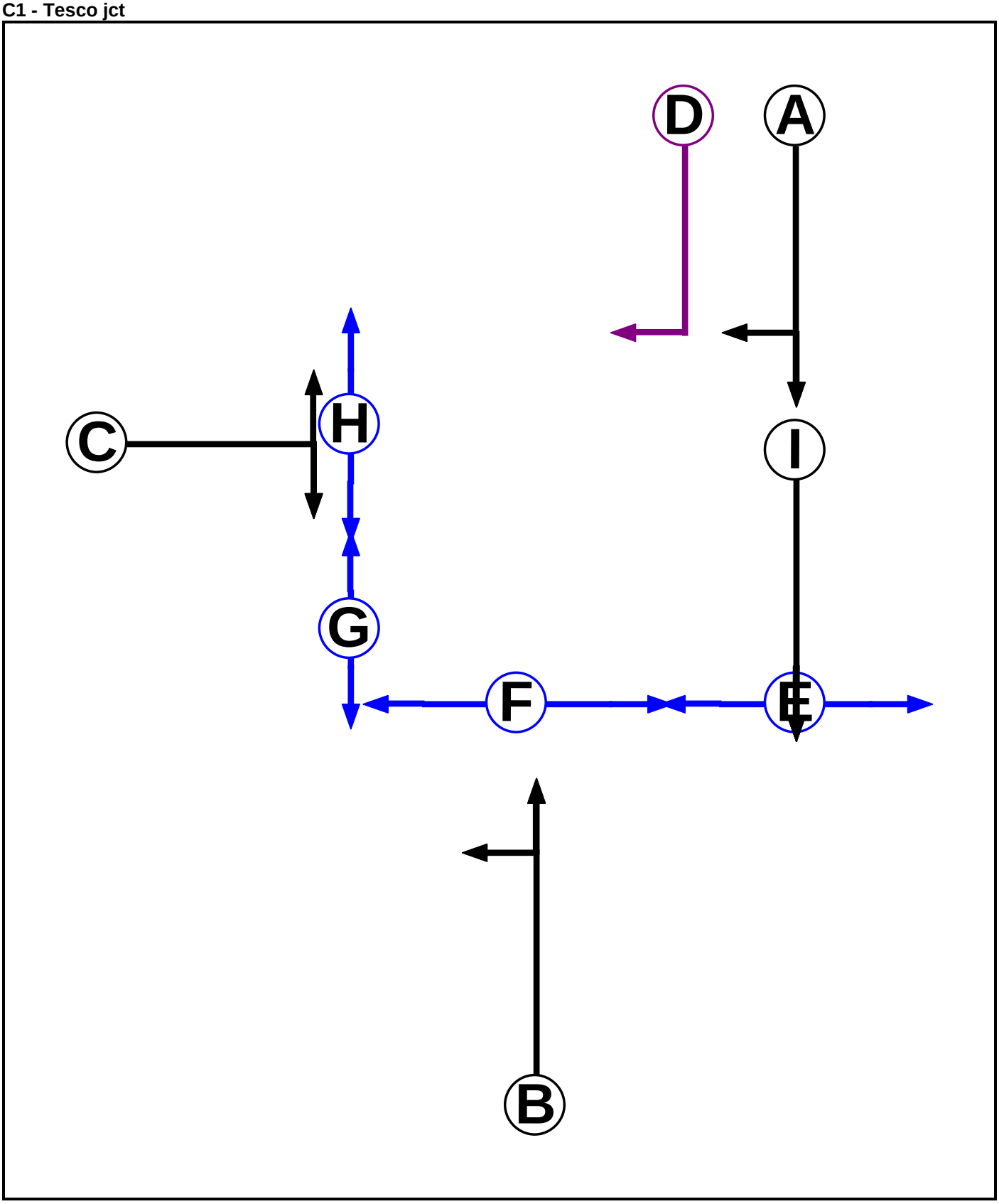

C2 - Falling Lane jct

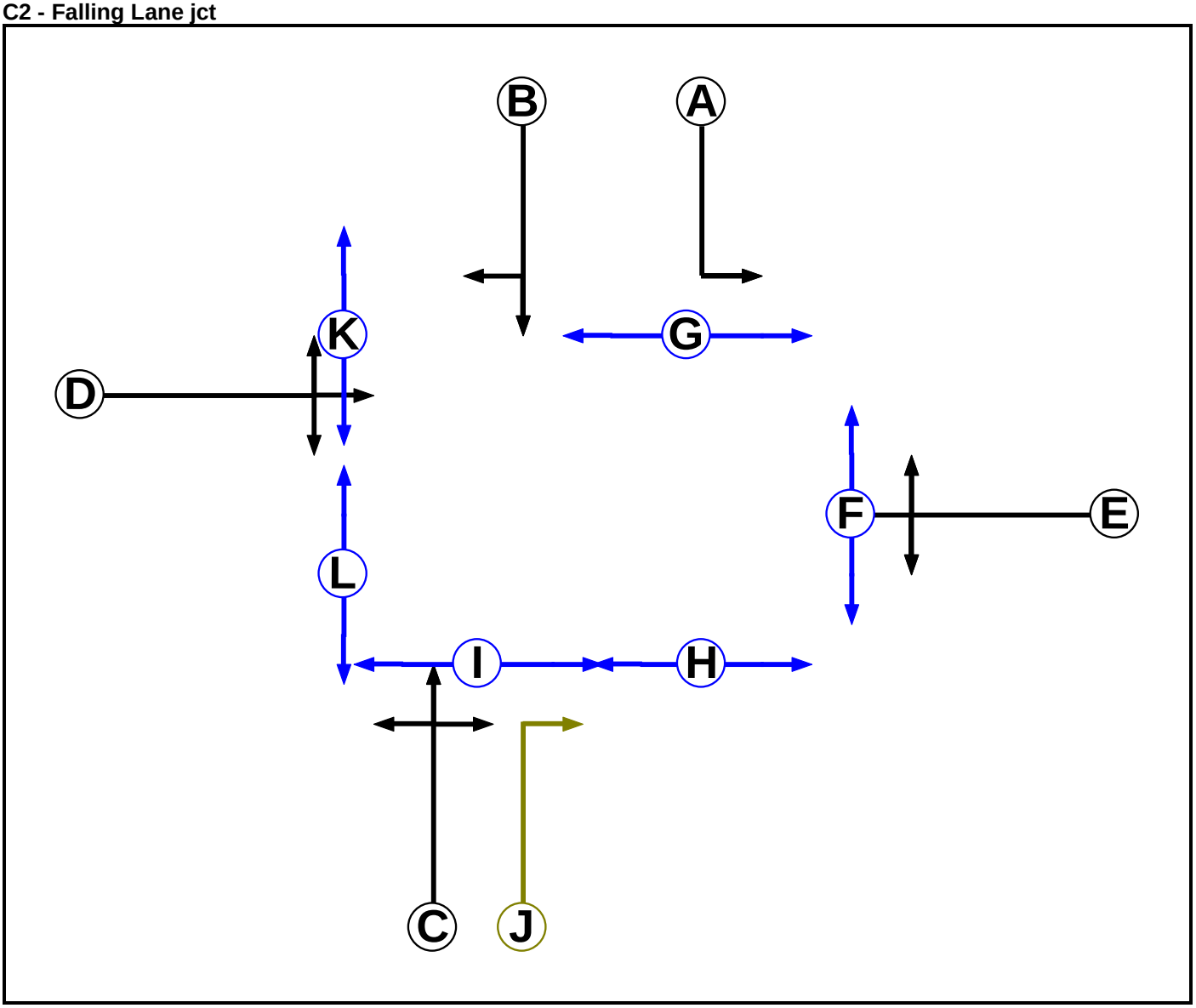

Phase Intergreens Matrix

C1 - Tesco jct

Terminating Phase \ Starting Phase	A	B	C	D	E	F	G	H	I
A		-	5	-	-	-	10	-	-
B	-		6	5	-	7	8	-	-
C	5	5		5	-	-	-	5	-
D	-	6	5		-	-	10	-	-
E	-	-	-	-		-	-	-	10
F	-	11	-	-	-		-	-	-
G	11	11	-	11	-	-		-	-
H	-	-	11	-	-	-	-		-
I	-	-	-	-	5	-	-	-	

C2 - Falling Lane jct

Terminating Phase \ Starting Phase	A	B	C	D	E	F	G	H	I	J	K	L
A		-	-	5	-	-	5	-	-	5	-	-
B	-		-	5	7	-	-	9	-	5	-	10
C	-	-		7	5	-	-	-	6	-	-	9
D	7	6	6		8	8	-	12	-	5	5	-
E	-	6	6	8		5	-	8	-	5	-	9
F	-	-	-	18	18		-	-	-	18	-	-
G	8	-	-	-	-	-		-	-	-	-	-
H	-	9	-	9	9	-	-		-	-	-	-
I	-	-	10	-	-	-	-	-		10	-	-
J	9	8	-	5	6	10	-	-	6		-	-
K	-	-	-	8	-	-	-	-	-	-		-
L	-	8	8	-	8	-	-	-	-	-	-	

Lane Input Data

Junction: J1: Tesco jct

Lane	Lane Type	Phases	Start Disp.	End Disp.	Physical Length (PCU)	Sat Flow Type	Def User Saturation Flow (PCU/Hr)	Lane Width (m)	Gradient	Nearside Lane	Turns	Turning Radius (m)
J1:1/1 (High Street N)	U	A	2	3	60.0	Geom	-	2.90	0.00	Y	Arm J1:6 Ahead	Inf
J1:1/2 (High Street N)	U	A	2	3	60.0	Geom	-	2.90	0.00	Y	Arm J1:6 Ahead	Inf

J1:1/3 (High Street N)	O	A D	2	3	6.1	Geom	-	2.90	0.00	Y	Arm J1:4 Right	8.74
J1:2/1 (Chantry Close)	U	C	2	3	1.7	Geom	-	3.00	0.00	Y	Arm J1:3 Left	5.50
J1:2/2 (Chantry Close)	U	C	2	3	60.0	Geom	-	3.00	0.00	Y	Arm J1:6 Right	11.40
J1:3/1 (High Street N Exit)	U		2	3	60.0	Inf	-	-	-	-	-	-
J1:3/2 (High Street N Exit)	U		2	3	60.0	Inf	-	-	-	-	-	-
J1:4/1 (Chantry Close Exit)	U		2	3	60.0	Inf	-	-	-	-	-	-
J1:5/1 (High Street internal NB)	U	B	2	3	13.6	Geom	-	3.00	0.00	Y	Arm J1:3 Ahead Arm J1:4 Left	Inf 12.70
J1:5/2 (High Street internal NB)	U	B	2	3	13.6	Geom	-	3.00	0.00	Y	Arm J1:3 Ahead	Inf
J1:6/1 (High Street SB)	U	I	2	3	2.1	Geom	-	3.25	0.00	Y	Arm J2:7 Ahead	Inf
J1:6/2 (High Street SB)	U	I	2	3	2.1	Geom	-	3.25	0.00	Y	Arm J2:7 Ahead	Inf

Junction: J2: Falling Lane jct

Lane	Lane Type	Phases	Start Disp.	End Disp.	Physical Length (PCU)	Sat Flow Type	Def User Saturation Flow (PCU/Hr)	Lane Width (m)	Gradient	Nearside Lane	Turns	Turning Radius (m)
J2:1/1 (Falling Lane)	U	E	2	3	60.0	Geom	-	3.20	0.00	Y	Arm J2:3 Left	7.70
J2:1/2 (Falling Lane)	U	E	2	3	12.5	Geom	-	3.20	0.00	Y	Arm J2:5 Ahead	Inf
											Arm J1:5 Right	16.00
J2:1/3 (Falling Lane)	U	E	2	3	4.0	Geom	-	3.18	0.00	Y	Arm J1:5 Right	13.30
J2:2/1 (Falling Lane Exit)	U		2	3	60.0	Inf	-	-	-	-	-	-
J2:2/2 (Falling Lane Exit)	U		2	3	60.0	Inf	-	-	-	-	-	-
J2:3/1 (High Street S Exit)	U		2	3	60.0	Inf	-	-	-	-	-	-
J2:3/2 (High Street S Exit)	U		2	3	60.0	Inf	-	-	-	-	-	-
J2:4/1 (High Street S)	U	C	2	3	60.0	Geom	-	2.50	0.00	Y	Arm J2:5 Left	9.80
											Arm J1:5 Ahead	Inf
J2:4/2 (High Street S)	U	C	2	3	4.0	Geom	-	2.51	0.00	Y	Arm J1:5 Ahead	Inf
J2:4/3 (High Street S)	U	C J	2	3	4.0	Geom	-	2.55	0.00	Y	Arm J2:2 Right	12.20
J2:5/1 (Trout Road Exit)	U		2	3	60.0	Inf	-	-	-	-	-	-
J2:6/1 (Trout Road)	U	D	2	3	60.0	Geom	-	3.70	0.00	Y	Arm J2:2 Ahead	Inf
											Arm J2:3 Right	17.50
											Arm J1:5 Left	8.16
J2:7/1 (High Street internal SB)	U	A	2	3	4.0	Geom	-	3.00	0.00	Y	Arm J2:2 Left	23.50
J2:7/2 (High Street internal SB)	U	A	2	3	12.2	Geom	-	3.00	0.00	Y	Arm J2:2 Left	31.30

J2:7/3 (High Street internal SB)	U	B	2	3	12.2	Geom	-	2.80	0.00	Y	Arm J2:3 Ahead	Inf
J2:7/4 (High Street internal SB)	U	B	2	3	12.2	Geom	-	2.80	0.00	Y	Arm J2:3 Ahead	Inf
J2:7/5 (High Street internal SB)	U	B	2	3	12.2	Geom	-	2.80	0.00	Y	Arm J2:5 Right	7.50

Lane Saturation Flows

Junction: J1: Tesco jct								
Lane	**Lane Width (m)**	**Gradient**	**Nearside Lane**	**Allowed Turns**	**Turning Radius (m)**	**Turning Prop.**	**Sat Flow (PCU/Hr)**	**Flared Sat Flow (PCU/Hr)**
J1:1/1 (High Street N)	2.90	0.00	Y	Arm J1:6 Ahead	Inf	100.0 %	1905	1905
J1:1/2 (High Street N)	2.90	0.00	Y	Arm J1:6 Ahead	Inf	100.0 %	1905	1905
J1:1/3 (High Street N)	2.90	0.00	Y	Arm J1:4 Right	8.74	100.0 %	1626	1626
J1:2/1 (Chantry Close)	3.00	0.00	Y	Arm J1:3 Left	5.50	100.0 %	1505	1505
J1:2/2 (Chantry Close)	3.00	0.00	Y	Arm J1:6 Right	11.40	100.0 %	1692	1692
J1:3/1 (High Street N Exit Lane 1)	Infinite Saturation Flow						Inf	Inf
J1:3/2 (High Street N Exit Lane 2)	Infinite Saturation Flow						Inf	Inf
J1:4/1 (Chantry Close Exit Lane 1)	Infinite Saturation Flow						Inf	Inf
J1:5/1 (High Street internal NB)	3.00	0.00	Y	Arm J1:3 Ahead	Inf	73.7 %	1857	1857
				Arm J1:4 Left	12.70	26.3 %		
J1:5/2 (High Street internal NB)	3.00	0.00	Y	Arm J1:3 Ahead	Inf	100.0 %	1915	1915
J1:6/1 (High Street SB)	3.25	0.00	Y	Arm J2:7 Ahead	Inf	100.0 %	1940	1940
J1:6/2 (High Street SB)	3.25	0.00	Y	Arm J2:7 Ahead	Inf	100.0 %	1940	1940

Junction: J2: Falling Lane jct

Lane	Lane Width (m)	Gradient	Nearside Lane	Allowed Turns	Turning Radius (m)	Turning Prop.	Sat Flow (PCU/Hr)	Flared Sat Flow (PCU/Hr)
J2:1/1 (Falling Lane)	3.20	0.00	Y	Arm J2:3 Left	7.70	100.0 %	1620	1620
J2:1/2 (Falling Lane)	3.20	0.00	Y	Arm J2:5 Ahead	Inf	16.9 %	1795	1795
				Arm J1:5 Right	16.00	83.1 %		
J2:1/3 (Falling Lane)	3.18	0.00	Y	Arm J1:5 Right	13.30	100.0 %	1737	1737
J2:2/1 (Falling Lane Exit Lane 1)	Infinite Saturation Flow						Inf	Inf
J2:2/2 (Falling Lane Exit Lane 2)	Infinite Saturation Flow						Inf	Inf
J2:3/1 (High Street S Exit Lane 1)	Infinite Saturation Flow						Inf	Inf
J2:3/2 (High Street S Exit Lane 2)	Infinite Saturation Flow						Inf	Inf
J2:4/1 (High Street S)	2.50	0.00	Y	Arm J2:5 Left	9.80	7.6 %	1844	1844
				Arm J1:5 Ahead	Inf	92.4 %		
J2:4/2 (High Street S)	2.51	0.00	Y	Arm J1:5 Ahead	Inf	100.0 %	1866	1866
J2:4/3 (High Street S)	2.55	0.00	Y	Arm J2:2 Right	12.20	100.0 %	1665	1665
J2:5/1 (Trout Road Exit Lane 1)	Infinite Saturation Flow						Inf	Inf
J2:6/1 (Trout Road)	3.70	0.00	Y	Arm J2:2 Ahead	Inf	44.9 %	1815	1815
				Arm J2:3 Right	17.50	8.1 %		
				Arm J1:5 Left	8.16	47.1 %		
J2:7/1 (High Street internal SB)	3.00	0.00	Y	Arm J2:2 Left	23.50	100.0 %	1800	1800
J2:7/2 (High Street internal SB)	3.00	0.00	Y	Arm J2:2 Left	31.30	100.0 %	1827	1827
J2:7/3 (High Street internal SB)	2.80	0.00	Y	Arm J2:3 Ahead	Inf	100.0 %	1895	1895
J2:7/4 (High Street internal SB)	2.80	0.00	Y	Arm J2:3 Ahead	Inf	100.0 %	1895	1895
J2:7/5 (High Street internal SB)	2.80	0.00	Y	Arm J2:5 Right	7.50	100.0 %	1579	1579

Lane Connector Input Data

Junction: J1: Tesco jct				
Org Lane	**Dest Lane**	**Junction**	**Mean Cruise Time**	**Platoon Dispersion**
J1:1/1	J1:6/1	Internal	3	35
J1:1/2	J1:6/2	Internal	3	35
J1:1/3	J1:4/1	Internal	5	35
J2:1/2	J1:5/1	Entering	12	35
J2:1/3	J1:5/2	Entering	12	35
J1:2/1	J1:3/1	Internal	5	35
J1:2/2	J1:6/1	Internal	4	35
J1:2/2	J1:6/2	Internal	4	35
J2:4/1	J1:5/1	Entering	12	35
J2:4/2	J1:5/2	Entering	12	35
J2:6/1	J1:5/1	Entering	10	35
J2:6/1	J1:5/2	Entering	10	35
J1:5/1	J1:3/1	Internal	5	35
J1:5/1	J1:4/1	Internal	5	35
J1:5/2	J1:3/2	Internal	5	35
J1:6/1	J2:7/2	Leaving	8	35
J1:6/1	J2:7/3	Leaving	8	35
J1:6/2	J2:7/4	Leaving	8	35
J1:6/2	J2:7/5	Leaving	8	35

Junction: J2: Falling Lane jct				
Org Lane	**Dest Lane**	**Junction**	**Mean Cruise Time**	**Platoon Dispersion**
J2:1/1	J2:3/1	Internal	5	35
J2:1/1	J2:3/2	Internal	5	35
J2:1/2	J2:5/1	Internal	5	35
J2:1/2	J1:5/1	Leaving	12	35
J2:1/3	J1:5/2	Leaving	12	35
J2:4/1	J2:5/1	Internal	5	35
J2:4/1	J1:5/1	Leaving	12	35
J2:4/2	J1:5/2	Leaving	12	35
J2:4/3	J2:2/2	Internal	5	35
J2:6/1	J2:2/2	Internal	5	35
J2:6/1	J2:3/2	Internal	5	35
J2:6/1	J1:5/1	Leaving	10	35
J2:6/1	J1:5/2	Leaving	10	35
J2:7/1	J2:2/1	Internal	5	35
J2:7/2	J2:2/2	Internal	5	35
J2:7/3	J2:3/1	Internal	5	35
J2:7/4	J2:3/2	Internal	5	35
J2:7/5	J2:5/1	Internal	5	35
J1:6/1	J2:7/2	Entering	8	35
J1:6/1	J2:7/3	Entering	8	35
J1:6/2	J2:7/4	Entering	8	35
J1:6/2	J2:7/5	Entering	8	35

Stage Sequence Diagram

C1 - Tesco jct

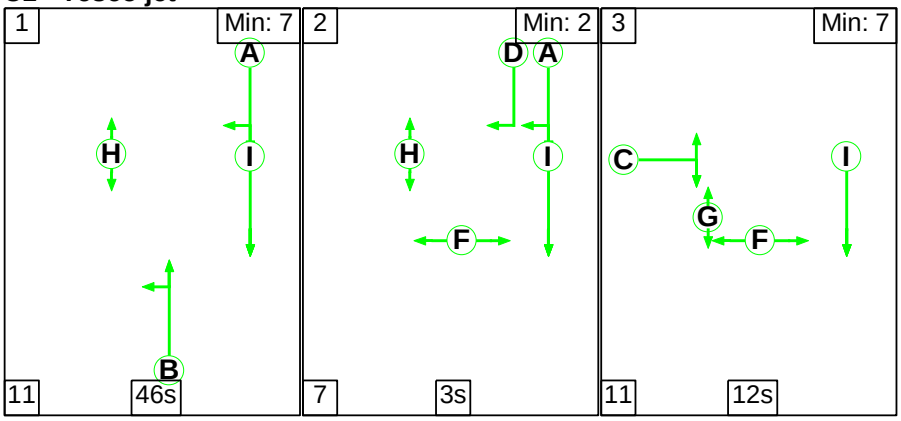

C2 - Falling Lane jct

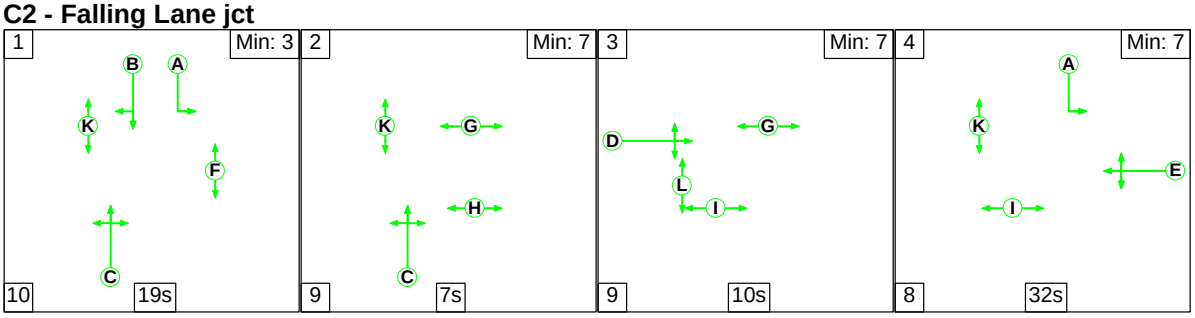

Signal Timings Diagram

C1 - Tesco jct

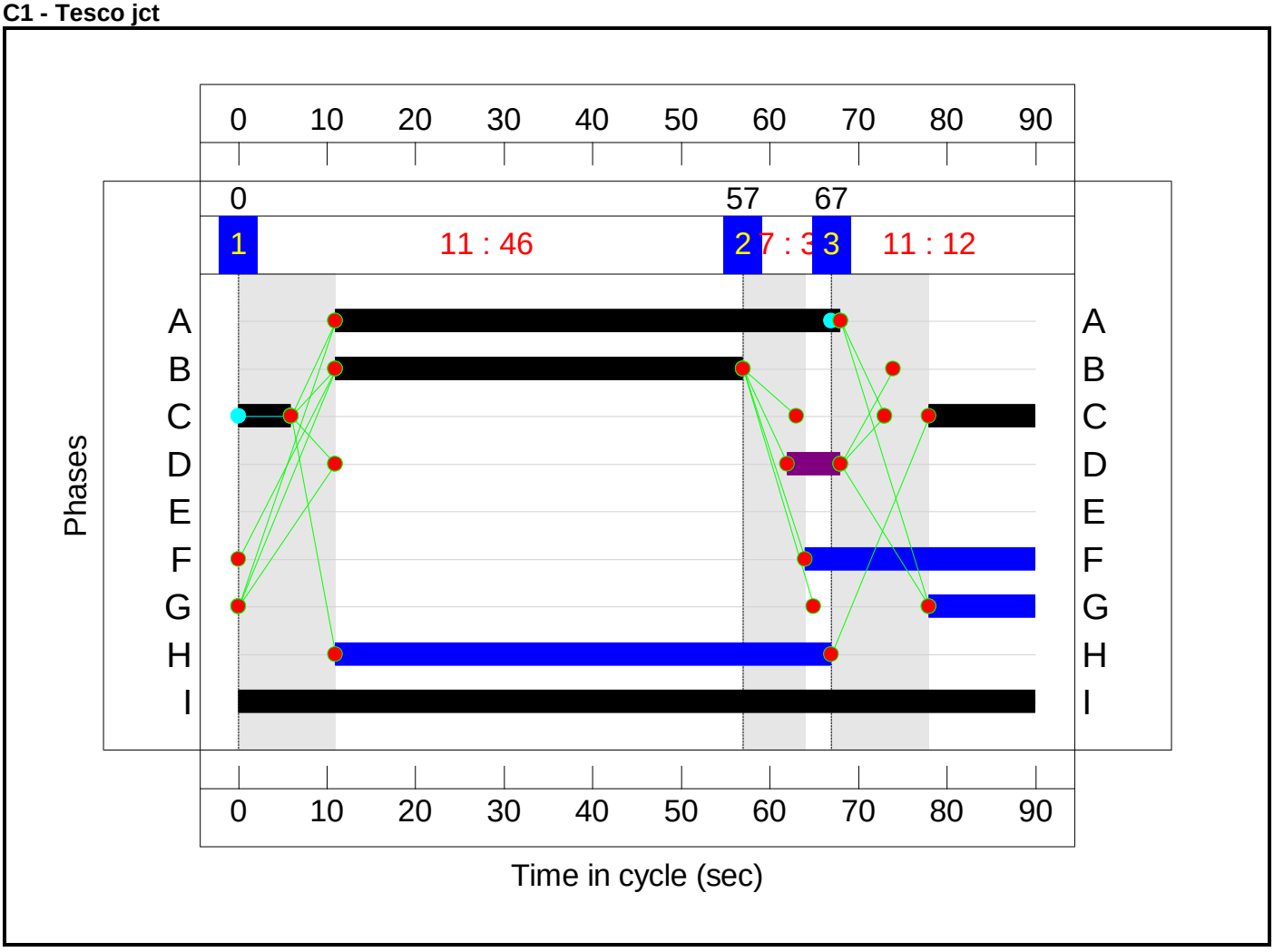

C2 - Falling Lane jct

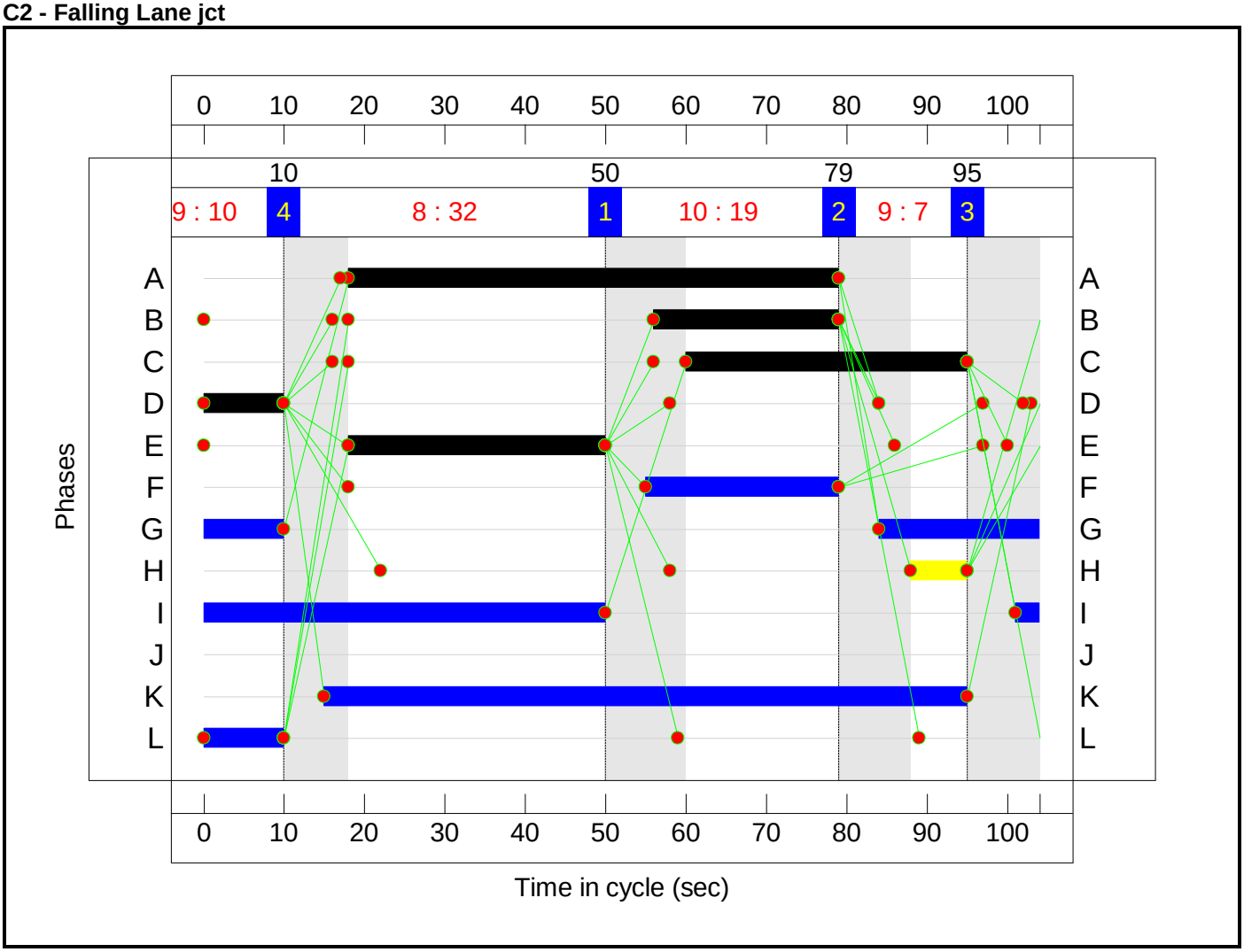

Network Results

Item	Lane Description	Lane Type	Full Phase	Arrow Phase	Num Greens	Total Green (s)	Arrow Green (s)	Demand Flow (pcu)	Sat Flow (pcu/Hr)	Capacity (pcu)	Deg Sat (%)	Turners In Gaps (pcu)	Turners When Unopposed (pcu)	Turners In Intergreen (pcu)	Total Delay (pcuHr)	Av. Delay Per PCU (s/pcu)	Mean Max Queue (pcu)
Network: Chantry Close/High Street	-	-	-		-	-	-	-	-	-	**74.5%**	**93**	**4**	**2**	**34.6**	-	-
J1: Tesco jct	-	-	-		-	-	-	-	-	-	**74.5%**	**93**	**4**	**2**	**12.3**	-	-
1/1	High Street N Ahead	U	C1:A		1	57	-	544	1905	1079	50.4%	-	-	-	2.3	15.2	8.7
1/2+1/3	High Street N Right Ahead	U+O	C1:A	C1:D	1	57	6	401	1905:1626	852+283	35.3 : 35.3%	93	4	2	1.6	14.0	4.1
2/2+2/1	Chantry Close Left Right	U	C1:C		1	18	-	279	1692:1505	219+156	74.5 : 74.5%	-	-	-	4.0	51.4	6.6
5/1	High Street internal NB Ahead Left	U	C1:B		1	46	-	476	1857	1073	44.4%	-	-	-	1.8	13.8	7.1
5/2	High Street internal NB Ahead	U	C1:B		1	46	-	503	1915	1106	45.5%	-	-	-	1.9	13.9	7.5
6/1	High Street SB Ahead	U	C1:I		1	90	-	677	1940	1746	38.8%	-	-	-	0.5	2.8	3.5
6/2	High Street SB Ahead	U	C1:I		1	90	-	331	1940	1746	19.0%	-	-	-	0.2	1.6	0.7
J2: Falling Lane jct	-	-	-		-	-	-	-	-	-	**70.8%**	**0**	**0**	**0**	**22.3**	-	-
1/1	Falling Lane Left	U	C2:E		1	32	-	137	1620	514	26.7%	-	-	-	1.2	31.3	3.1
1/2+1/3	Falling Lane Ahead Right	U	C2:E		1	32	-	468	1795:1737	359+332	67.7 : 67.7%	-	-	-	4.7	36.4	8.5
4/1	High Street S Left Ahead	U	C2:C		1	35	-	276	1844	638	43.2%	-	-	-	2.4	31.1	6.4
4/2+4/3	High Street S Right Ahead	U	C2:C	C2:J	1	35	0	369	1866:1665	442+258	52.7 : 52.7%	-	-	-	3.2	30.7	6.3

6/1	Trout Road Ahead Right Left	U	C2:D		1	10	-	136	1815	192	70.8%	-	-	-	2.9	75.8	4.9
7/2+7/1	High Street internal SB Left	U	C2:A		1	61	-	474	1827:1800	613+603	39.0 : 39.0%	-	-	-	1.6	12.2	3.5
7/3	High Street internal SB Ahead	U	C2:B		1	23	-	203	1895	437	46.4%	-	-	-	2.4	42.1	5.5
7/4	High Street internal SB Ahead	U	C2:B		1	23	-	250	1895	437	57.2%	-	-	-	3.1	45.0	7.1
7/5	High Street internal SB Right	U	C2:B		1	23	-	81	1579	364	22.2%	-	-	-	0.9	38.8	2.0

C1 - Tesco jct	PRC for Signalled Lanes (%):	20.8	Total Delay for Signalled Lanes (pcuHr):	12.28	Cycle Time (s): 90
C2 - Falling Lane jct	PRC for Signalled Lanes (%):	27.0	Total Delay for Signalled Lanes (pcuHr):	22.29	Cycle Time (s): 104
	PRC Over All Lanes (%):	20.8	Total Delay Over All Lanes(pcuHr):	34.58	

Scenario 3: '2019 Baseline Sat' (FG3: '2019 Baseline Sat', Plan 2: 'Network Control Plan 2')

Network Layout Diagram

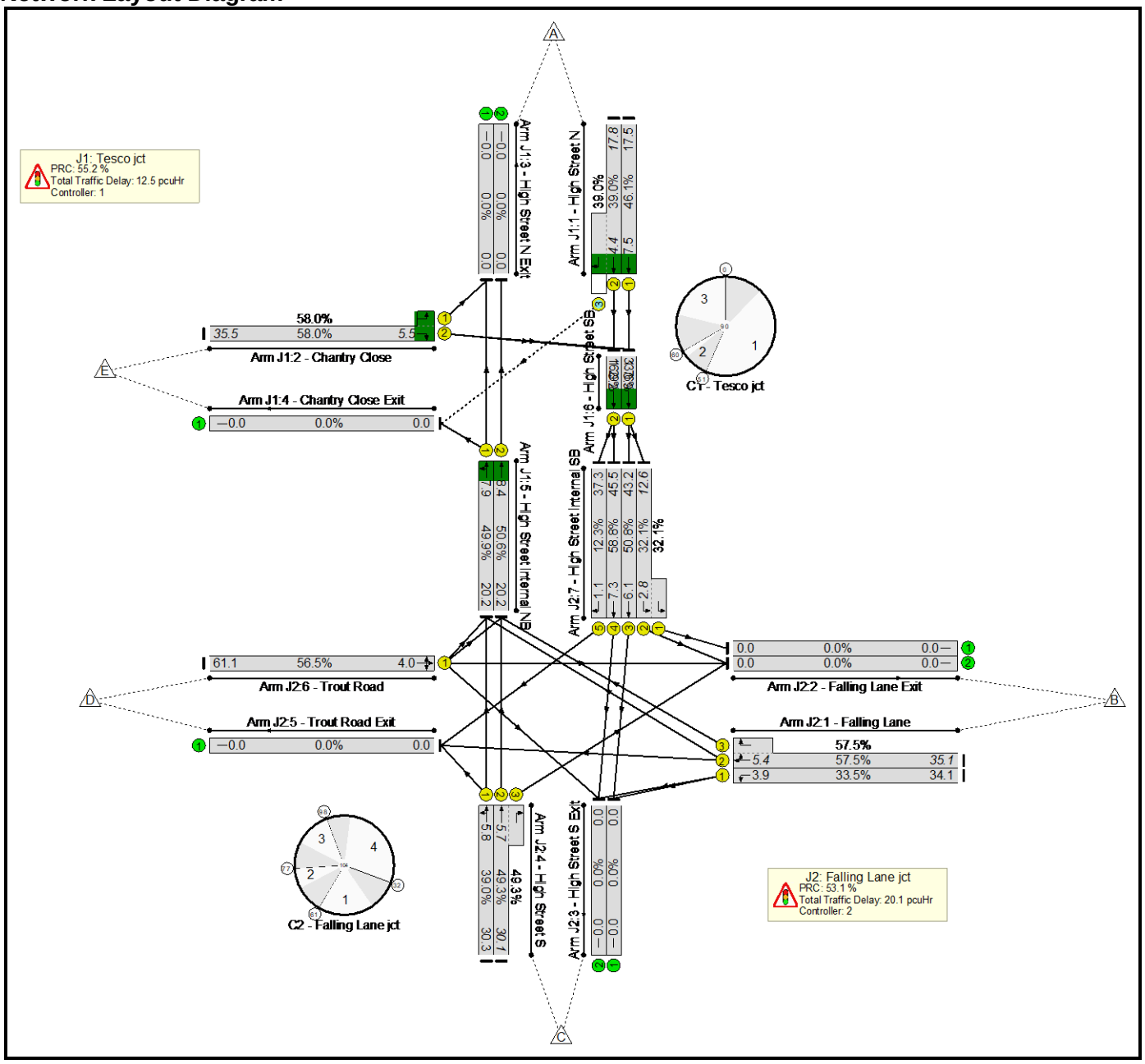

Phase Diagram
C1 - Tesco jct

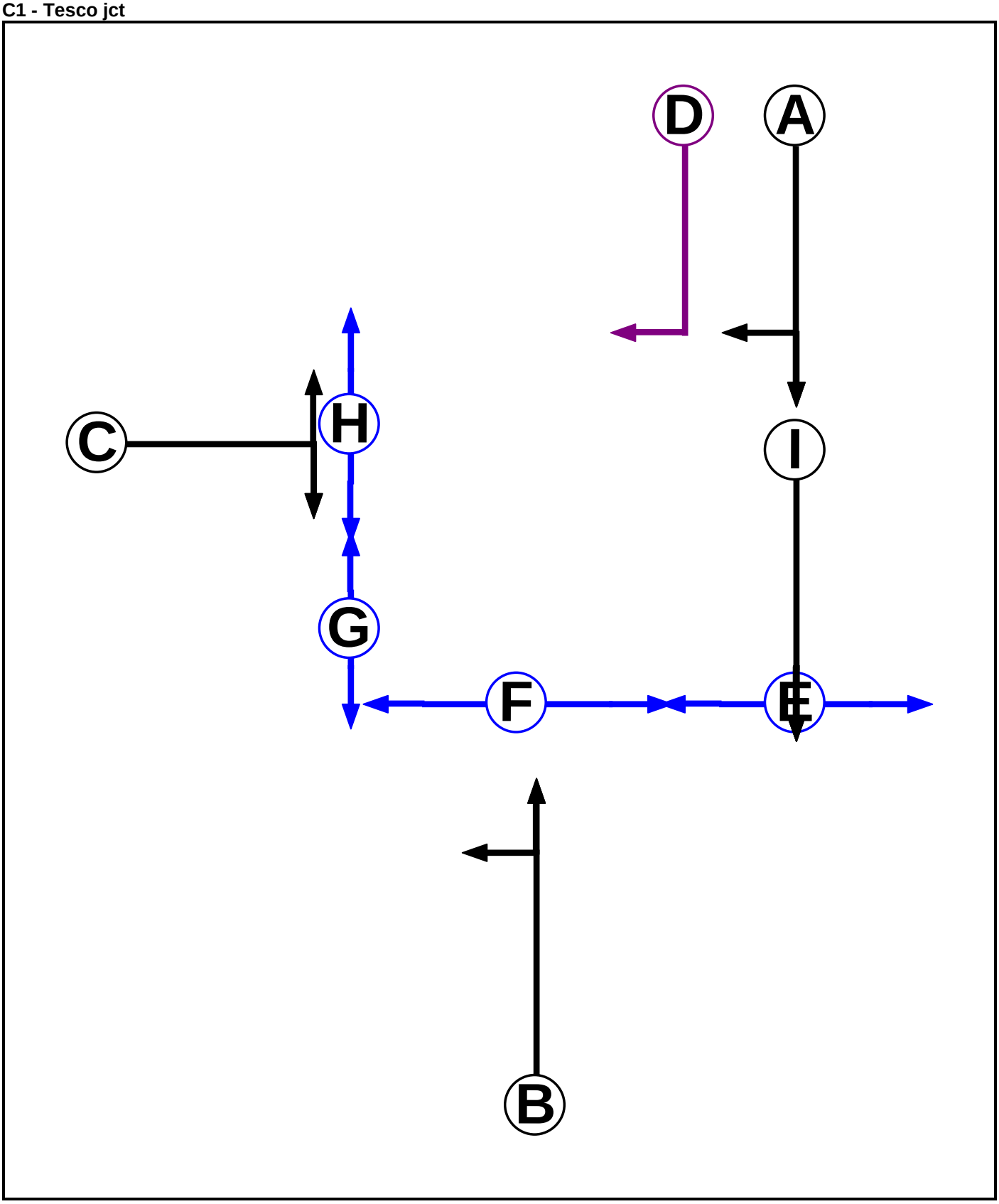

C2 - Falling Lane jct

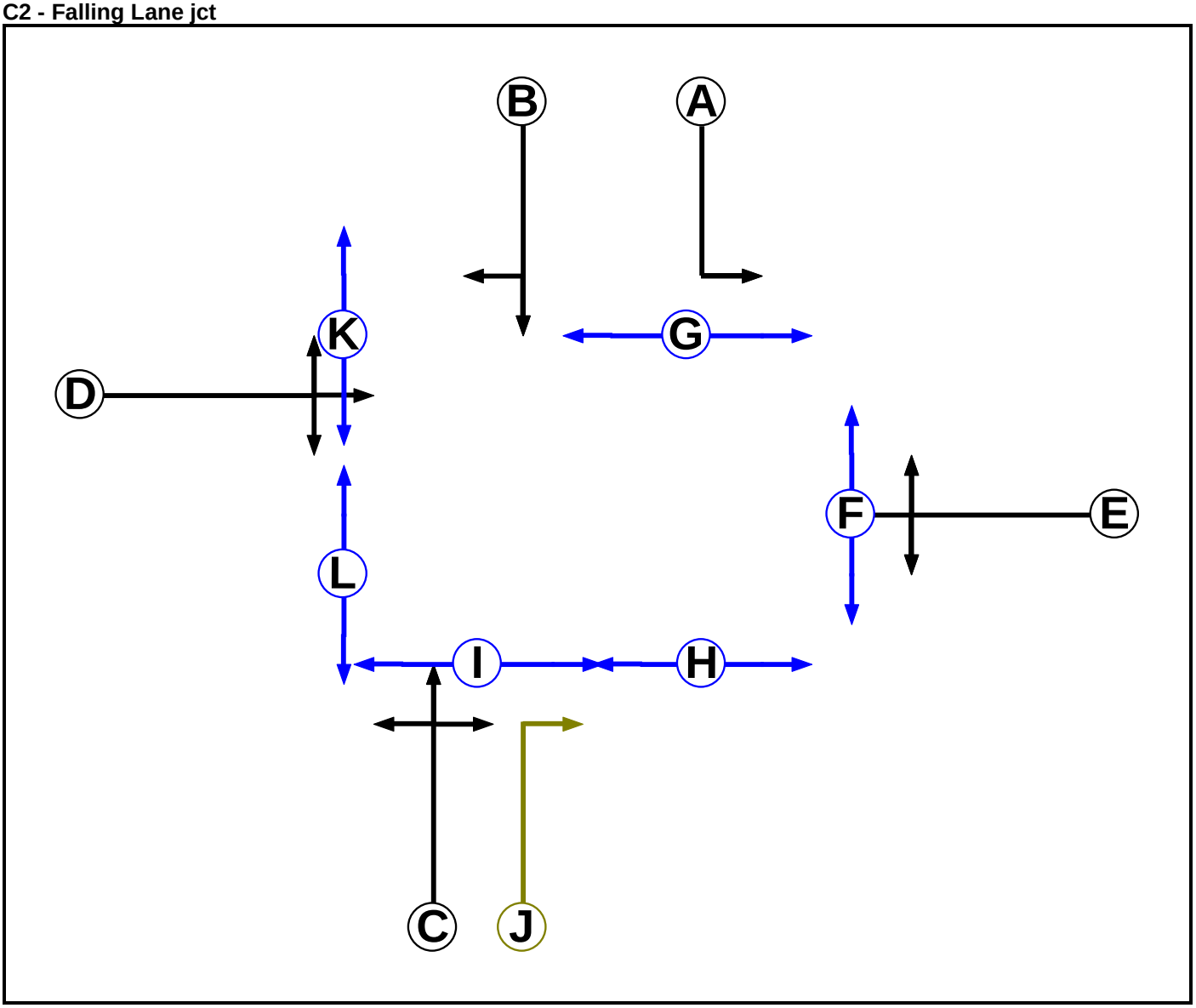

Phase Intergreens Matrix

C1 - Tesco jct

Terminating Phase \ Starting Phase	A	B	C	D	E	F	G	H	I
A		-	5	-	-	-	10	-	-
B	-		6	5	-	7	8	-	-
C	5	5		5	-	-	-	5	-
D	-	6	5		-	-	10	-	-
E	-	-	-	-		-	-	-	10
F	-	11	-	-	-		-	-	-
G	11	11	-	11	-	-		-	-
H	-	-	11	-	-	-	-		-
I	-	-	-	-	5	-	-	-	

C2 - Falling Lane jct

Terminating Phase \ Starting Phase	A	B	C	D	E	F	G	H	I	J	K	L
A		-	-	5	-	-	5	-	-	5	-	-
B	-		-	5	7	-	-	9	-	5	-	10
C	-	-		7	5	-	-	-	6	-	-	9
D	7	6	6		8	8	-	12	-	5	5	-
E	-	6	6	8		5	-	8	-	5	-	9
F	-	-	-	18	18		-	-	-	18	-	-
G	8	-	-	-	-	-		-	-	-	-	-
H	-	9	-	9	9	-	-		-	-	-	-
I	-	-	10	-	-	-	-	-		10	-	-
J	9	8	-	5	6	10	-	-	6		-	-
K	-	-	-	8	-	-	-	-	-	-		-
L	-	8	8	-	8	-	-	-	-	-	-	

Lane Input Data

Junction: J1: Tesco jct

Lane	Lane Type	Phases	Start Disp.	End Disp.	Physical Length (PCU)	Sat Flow Type	Def User Saturation Flow (PCU/Hr)	Lane Width (m)	Gradient	Nearside Lane	Turns	Turning Radius (m)
J1:1/1 (High Street N)	U	A	2	3	60.0	Geom	-	2.90	0.00	Y	Arm J1:6 Ahead	Inf
J1:1/2 (High Street N)	U	A	2	3	60.0	Geom	-	2.90	0.00	Y	Arm J1:6 Ahead	Inf

J1:1/3 (High Street N)	O	A D	2	3	6.1	Geom	-	2.90	0.00	Y	Arm J1:4 Right	8.74
J1:2/1 (Chantry Close)	U	C	2	3	1.7	Geom	-	3.00	0.00	Y	Arm J1:3 Left	5.50
J1:2/2 (Chantry Close)	U	C	2	3	60.0	Geom	-	3.00	0.00	Y	Arm J1:6 Right	11.40
J1:3/1 (High Street N Exit)	U		2	3	60.0	Inf	-	-	-	-	-	-
J1:3/2 (High Street N Exit)	U		2	3	60.0	Inf	-	-	-	-	-	-
J1:4/1 (Chantry Close Exit)	U		2	3	60.0	Inf	-	-	-	-	-	-
J1:5/1 (High Street internal NB)	U	B	2	3	13.6	Geom	-	3.00	0.00	Y	Arm J1:3 Ahead Arm J1:4 Left	Inf 12.70
J1:5/2 (High Street internal NB)	U	B	2	3	13.6	Geom	-	3.00	0.00	Y	Arm J1:3 Ahead	Inf
J1:6/1 (High Street SB)	U	I	2	3	2.1	Geom	-	3.25	0.00	Y	Arm J2:7 Ahead	Inf
J1:6/2 (High Street SB)	U	I	2	3	2.1	Geom	-	3.25	0.00	Y	Arm J2:7 Ahead	Inf

Junction: J2: Falling Lane jct

Lane	Lane Type	Phases	Start Disp.	End Disp.	Physical Length (PCU)	Sat Flow Type	Def User Saturation Flow (PCU/Hr)	Lane Width (m)	Gradient	Nearside Lane	Turns	Turning Radius (m)
J2:1/1 (Falling Lane)	U	E	2	3	60.0	Geom	-	3.20	0.00	Y	Arm J2:3 Left	7.70
J2:1/2 (Falling Lane)	U	E	2	3	12.5	Geom	-	3.20	0.00	Y	Arm J2:5 Ahead	Inf
											Arm J1:5 Right	16.00
J2:1/3 (Falling Lane)	U	E	2	3	4.0	Geom	-	3.18	0.00	Y	Arm J1:5 Right	13.30
J2:2/1 (Falling Lane Exit)	U		2	3	60.0	Inf	-	-	-	-	-	-
J2:2/2 (Falling Lane Exit)	U		2	3	60.0	Inf	-	-	-	-	-	-
J2:3/1 (High Street S Exit)	U		2	3	60.0	Inf	-	-	-	-	-	-
J2:3/2 (High Street S Exit)	U		2	3	60.0	Inf	-	-	-	-	-	-
J2:4/1 (High Street S)	U	C	2	3	60.0	Geom	-	2.50	0.00	Y	Arm J2:5 Left	9.80
											Arm J1:5 Ahead	Inf
J2:4/2 (High Street S)	U	C	2	3	4.0	Geom	-	2.51	0.00	Y	Arm J1:5 Ahead	Inf
J2:4/3 (High Street S)	U	C J	2	3	4.0	Geom	-	2.55	0.00	Y	Arm J2:2 Right	12.20
J2:5/1 (Trout Road Exit)	U		2	3	60.0	Inf	-	-	-	-	-	-
J2:6/1 (Trout Road)	U	D	2	3	60.0	Geom	-	3.70	0.00	Y	Arm J2:2 Ahead	Inf
											Arm J2:3 Right	17.50
											Arm J1:5 Left	8.16
J2:7/1 (High Street internal SB)	U	A	2	3	4.0	Geom	-	3.00	0.00	Y	Arm J2:2 Left	23.50
J2:7/2 (High Street internal SB)	U	A	2	3	12.2	Geom	-	3.00	0.00	Y	Arm J2:2 Left	31.30

J2:7/3 (High Street internal SB)	U	B	2	3	12.2	Geom	-	2.80	0.00	Y	Arm J2:3 Ahead	Inf
J2:7/4 (High Street internal SB)	U	B	2	3	12.2	Geom	-	2.80	0.00	Y	Arm J2:3 Ahead	Inf
J2:7/5 (High Street internal SB)	U	B	2	3	12.2	Geom	-	2.80	0.00	Y	Arm J2:5 Right	7.50

Lane Saturation Flows

Junction: J1: Tesco jct								
Lane	**Lane Width (m)**	**Gradient**	**Nearside Lane**	**Allowed Turns**	**Turning Radius (m)**	**Turning Prop.**	**Sat Flow (PCU/Hr)**	**Flared Sat Flow (PCU/Hr)**
J1:1/1 (High Street N)	2.90	0.00	Y	Arm J1:6 Ahead	Inf	100.0 %	1905	1905
J1:1/2 (High Street N)	2.90	0.00	Y	Arm J1:6 Ahead	Inf	100.0 %	1905	1905
J1:1/3 (High Street N)	2.90	0.00	Y	Arm J1:4 Right	8.74	100.0 %	1626	1626
J1:2/1 (Chantry Close)	3.00	0.00	Y	Arm J1:3 Left	5.50	100.0 %	1505	1505
J1:2/2 (Chantry Close)	3.00	0.00	Y	Arm J1:6 Right	11.40	100.0 %	1692	1692
J1:3/1 (High Street N Exit Lane 1)	Infinite Saturation Flow						Inf	Inf
J1:3/2 (High Street N Exit Lane 2)	Infinite Saturation Flow						Inf	Inf
J1:4/1 (Chantry Close Exit Lane 1)	Infinite Saturation Flow						Inf	Inf
J1:5/1 (High Street internal NB)	3.00	0.00	Y	Arm J1:3 Ahead	Inf	58.6 %	1826	1826
				Arm J1:4 Left	12.70	41.4 %		
J1:5/2 (High Street internal NB)	3.00	0.00	Y	Arm J1:3 Ahead	Inf	100.0 %	1915	1915
J1:6/1 (High Street SB)	3.25	0.00	Y	Arm J2:7 Ahead	Inf	100.0 %	1940	1940
J1:6/2 (High Street SB)	3.25	0.00	Y	Arm J2:7 Ahead	Inf	100.0 %	1940	1940

Junction: J2: Falling Lane jct								
Lane	**Lane Width (m)**	**Gradient**	**Nearside Lane**	**Allowed Turns**	**Turning Radius (m)**	**Turning Prop.**	**Sat Flow (PCU/Hr)**	**Flared Sat Flow (PCU/Hr)**
J2:1/1 (Falling Lane)	3.20	0.00	Y	Arm J2:3 Left	7.70	100.0 %	1620	1620
J2:1/2 (Falling Lane)	3.20	0.00	Y	Arm J2:5 Ahead	Inf	12.0 %	1788	1788
				Arm J1:5 Right	16.00	88.0 %		
J2:1/3 (Falling Lane)	3.18	0.00	Y	Arm J1:5 Right	13.30	100.0 %	1737	1737
J2:2/1 (Falling Lane Exit Lane 1)	Infinite Saturation Flow						Inf	Inf
J2:2/2 (Falling Lane Exit Lane 2)	Infinite Saturation Flow						Inf	Inf
J2:3/1 (High Street S Exit Lane 1)	Infinite Saturation Flow						Inf	Inf
J2:3/2 (High Street S Exit Lane 2)	Infinite Saturation Flow						Inf	Inf
J2:4/1 (High Street S)	2.50	0.00	Y	Arm J2:5 Left	9.80	2.8 %	1857	1857
				Arm J1:5 Ahead	Inf	97.2 %		
J2:4/2 (High Street S)	2.51	0.00	Y	Arm J1:5 Ahead	Inf	100.0 %	1866	1866
J2:4/3 (High Street S)	2.55	0.00	Y	Arm J2:2 Right	12.20	100.0 %	1665	1665
J2:5/1 (Trout Road Exit Lane 1)	Infinite Saturation Flow						Inf	Inf
J2:6/1 (Trout Road)	3.70	0.00	Y	Arm J2:2 Ahead	Inf	34.9 %	1785	1785
				Arm J2:3 Right	17.50	7.9 %		
				Arm J1:5 Left	8.16	57.1 %		
J2:7/1 (High Street internal SB)	3.00	0.00	Y	Arm J2:2 Left	23.50	100.0 %	1800	1800
J2:7/2 (High Street internal SB)	3.00	0.00	Y	Arm J2:2 Left	31.30	100.0 %	1827	1827
J2:7/3 (High Street internal SB)	2.80	0.00	Y	Arm J2:3 Ahead	Inf	100.0 %	1895	1895
J2:7/4 (High Street internal SB)	2.80	0.00	Y	Arm J2:3 Ahead	Inf	100.0 %	1895	1895
J2:7/5 (High Street internal SB)	2.80	0.00	Y	Arm J2:5 Right	7.50	100.0 %	1579	1579

Lane Connector Input Data

Junction: J1: Tesco jct				
Org Lane	**Dest Lane**	**Junction**	**Mean Cruise Time**	**Platoon Dispersion**
J1:1/1	J1:6/1	Internal	3	35
J1:1/2	J1:6/2	Internal	3	35
J1:1/3	J1:4/1	Internal	5	35
J2:1/2	J1:5/1	Entering	12	35
J2:1/3	J1:5/2	Entering	12	35
J1:2/1	J1:3/1	Internal	5	35
J1:2/2	J1:6/1	Internal	4	35
J1:2/2	J1:6/2	Internal	4	35
J2:4/1	J1:5/1	Entering	12	35
J2:4/2	J1:5/2	Entering	12	35
J2:6/1	J1:5/1	Entering	10	35
J2:6/1	J1:5/2	Entering	10	35
J1:5/1	J1:3/1	Internal	5	35
J1:5/1	J1:4/1	Internal	5	35
J1:5/2	J1:3/2	Internal	5	35
J1:6/1	J2:7/2	Leaving	8	35
J1:6/1	J2:7/3	Leaving	8	35
J1:6/2	J2:7/4	Leaving	8	35
J1:6/2	J2:7/5	Leaving	8	35

Junction: J2: Falling Lane jct				
Org Lane	Dest Lane	Junction	Mean Cruise Time	Platoon Dispersion
J2:1/1	J2:3/1	Internal	5	35
J2:1/1	J2:3/2	Internal	5	35
J2:1/2	J2:5/1	Internal	5	35
J2:1/2	J1:5/1	Leaving	12	35
J2:1/3	J1:5/2	Leaving	12	35
J2:4/1	J2:5/1	Internal	5	35
J2:4/1	J1:5/1	Leaving	12	35
J2:4/2	J1:5/2	Leaving	12	35
J2:4/3	J2:2/2	Internal	5	35
J2:6/1	J2:2/2	Internal	5	35
J2:6/1	J2:3/2	Internal	5	35
J2:6/1	J1:5/1	Leaving	10	35
J2:6/1	J1:5/2	Leaving	10	35
J2:7/1	J2:2/1	Internal	5	35
J2:7/2	J2:2/2	Internal	5	35
J2:7/3	J2:3/1	Internal	5	35
J2:7/4	J2:3/2	Internal	5	35
J2:7/5	J2:5/1	Internal	5	35
J1:6/1	J2:7/2	Entering	8	35
J1:6/1	J2:7/3	Entering	8	35
J1:6/2	J2:7/4	Entering	8	35
J1:6/2	J2:7/5	Entering	8	35

Stage Sequence Diagram

C1 - Tesco jct

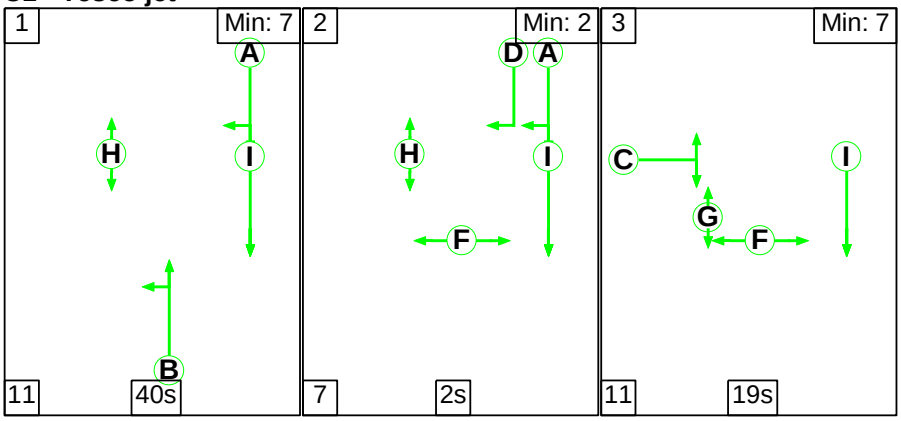

C2 - Falling Lane jct

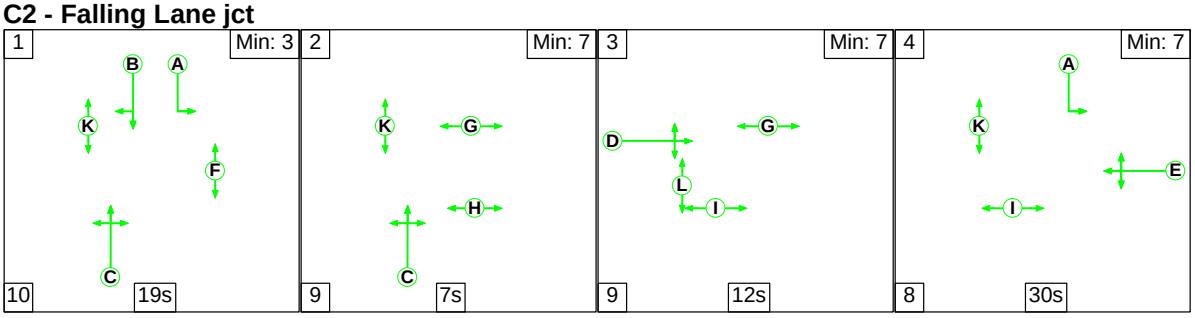

Signal Timings Diagram

C1 - Tesco jct

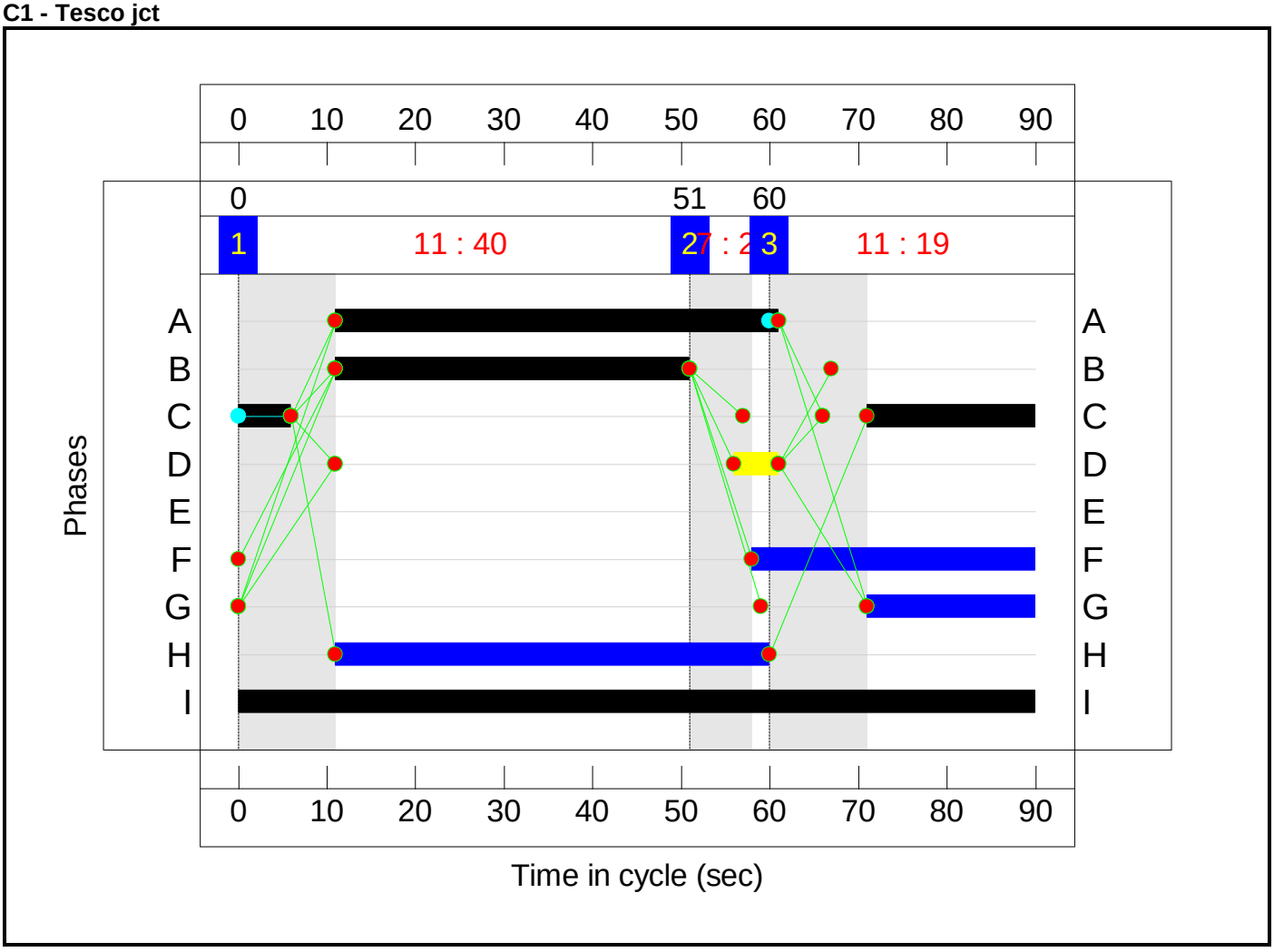

C2 - Falling Lane jct

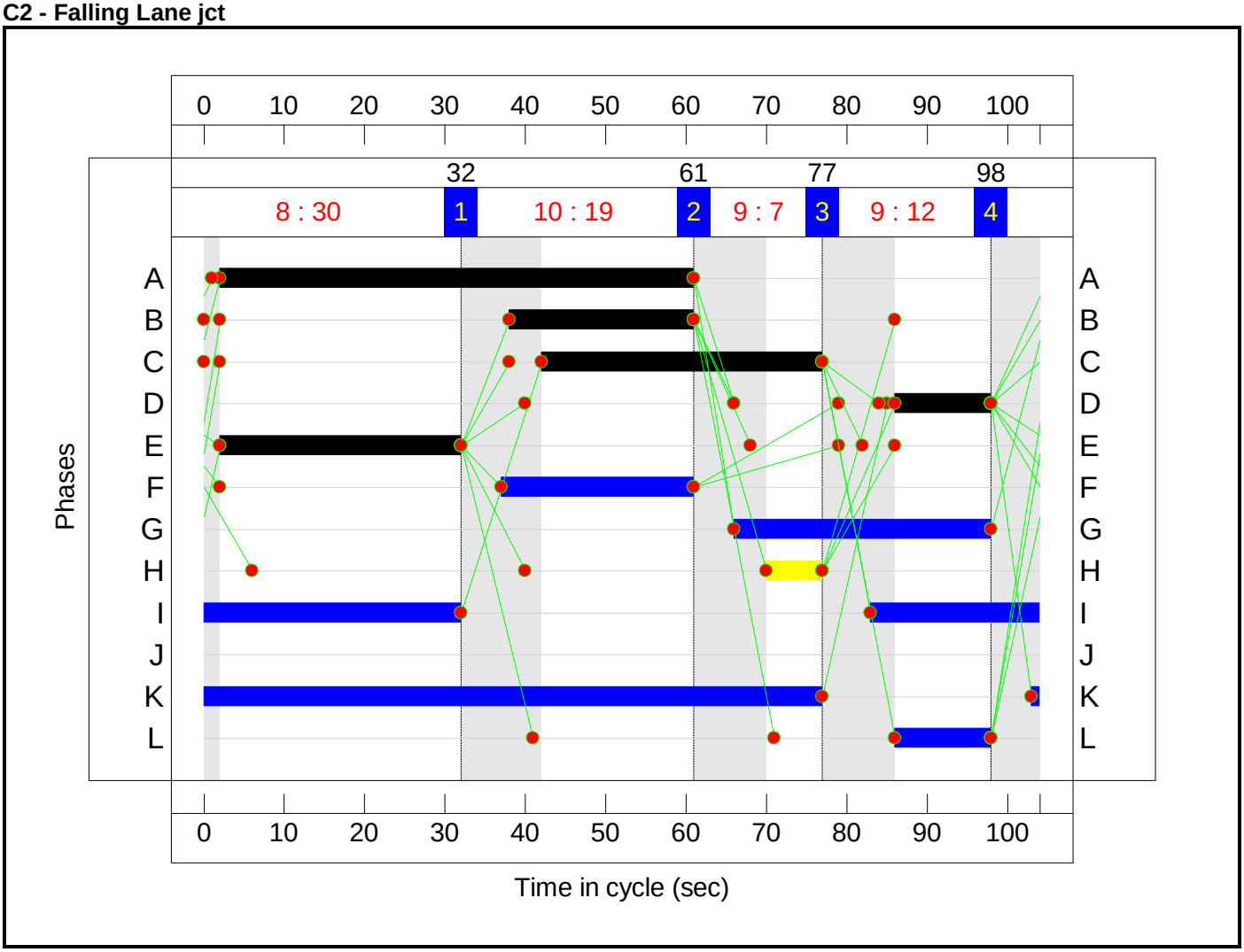

Network Results

Item	Lane Description	Lane Type	Full Phase	Arrow Phase	Num Greens	Total Green (s)	Arrow Green (s)	Demand Flow (pcu)	Sat Flow (pcu/Hr)	Capacity (pcu)	Deg Sat (%)	Turners In Gaps (pcu)	Turners When Unopposed (pcu)	Turners In Intergreen (pcu)	Total Delay (pcuHr)	Av. Delay Per PCU (s/pcu)	Mean Max Queue (pcu)
Network: Chantry Close/High Street	**-**	**-**	**-**		**-**	**-**	**-**	**-**	**-**	**-**	**58.8%**	**108**	**11**	**3**	**32.6**	**-**	**-**
J1: Tesco jct	**-**	**-**	**-**		**-**	**-**	**-**	**-**	**-**	**-**	**58.0%**	**108**	**11**	**3**	**12.5**	**-**	**-**
1/1	High Street N Ahead	U	C1:A		1	50	-	449	1905	974	46.1%	-	-	-	2.2	17.5	7.5
1/2+1/3	High Street N Right Ahead	U+O	C1:A	C1:D	1	50	5	410	1905:1626	738+313	39.0 : 39.0%	108	11	3	2.0	17.8	4.4
2/2+2/1	Chantry Close Left Right	U	C1:C		1	25	-	291	1692:1505	286+216	58.0 : 58.0%	-	-	-	2.9	35.5	5.5
5/1	High Street internal NB Ahead Left	U	C1:B		1	40	-	435	1826	872	49.9%	-	-	-	2.4	20.2	7.9
5/2	High Street internal NB Ahead	U	C1:B		1	40	-	463	1915	915	50.6%	-	-	-	2.6	20.2	8.4
6/1	High Street SB Ahead	U	C1:I		1	90	-	601	1940	1789	33.6%	-	-	-	0.3	1.7	0.9
6/2	High Street SB Ahead	U	C1:I		1	90	-	302	1940	1789	16.9%	-	-	-	0.1	1.2	0.2
J2: Falling Lane jct	**-**	**-**	**-**		**-**	**-**	**-**	**-**	**-**	**-**	**58.8%**	**0**	**0**	**0**	**20.1**	**-**	**-**
1/1	Falling Lane Left	U	C2:E		1	30	-	162	1620	483	33.5%	-	-	-	1.5	34.1	3.9
1/2+1/3	Falling Lane Ahead Right	U	C2:E		1	30	-	383	1788:1737	332+334	57.5 : 57.5%	-	-	-	3.7	35.1	5.4
4/1	High Street S Left Ahead	U	C2:C		1	35	-	251	1857	643	39.0%	-	-	-	2.1	30.3	5.8
4/2+4/3	High Street S Right Ahead	U	C2:C	C2:J	1	35	0	343	1866:1665	450+245	49.3 : 49.3%	-	-	-	2.9	30.1	5.7

6/1	Trout Road Ahead Right Left	U	C2:D		1	12	-	126	1785	223	56.5%	-	-	-	2.1	61.1	4.0
7/2+7/1	High Street internal SB Left	U	C2:A		1	59	-	379	1827:1800	595+586	32.1 : 32.1%	-	-	-	1.3	12.6	2.8
7/3	High Street internal SB Ahead	U	C2:B		1	23	-	222	1895	437	50.8%	-	-	-	2.7	43.2	6.1
7/4	High Street internal SB Ahead	U	C2:B		1	23	-	257	1895	437	58.8%	-	-	-	3.2	45.5	7.3
7/5	High Street internal SB Right	U	C2:B		1	23	-	45	1579	364	12.3%	-	-	-	0.5	37.3	1.1

C1 - Tesco jct	PRC for Signalled Lanes (%):	55.2	Total Delay for Signalled Lanes (pcuHr):	12.51	Cycle Time (s): 90
C2 - Falling Lane jct	PRC for Signalled Lanes (%):	53.1	Total Delay for Signalled Lanes (pcuHr):	20.10	Cycle Time (s): 104
	PRC Over All Lanes (%):	53.1	Total Delay Over All Lanes(pcuHr):	32.61	

Scenario 4: '2025 Growth with Existing AM' (FG4: '2025+CD+Existing AM', Plan 2: 'Network Control Plan 2')

Network Layout Diagram

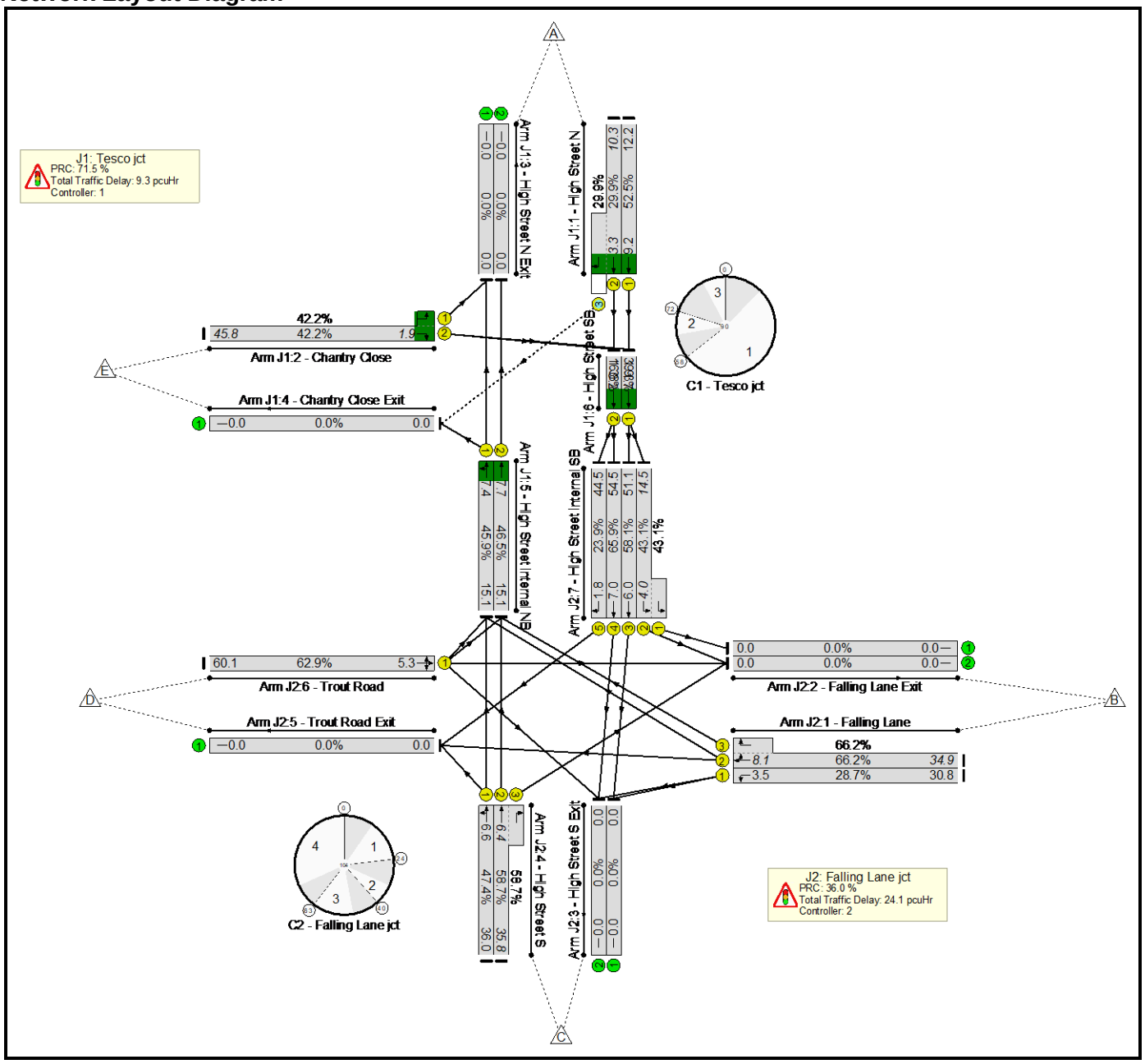

Phase Diagram
C1 - Tesco jct

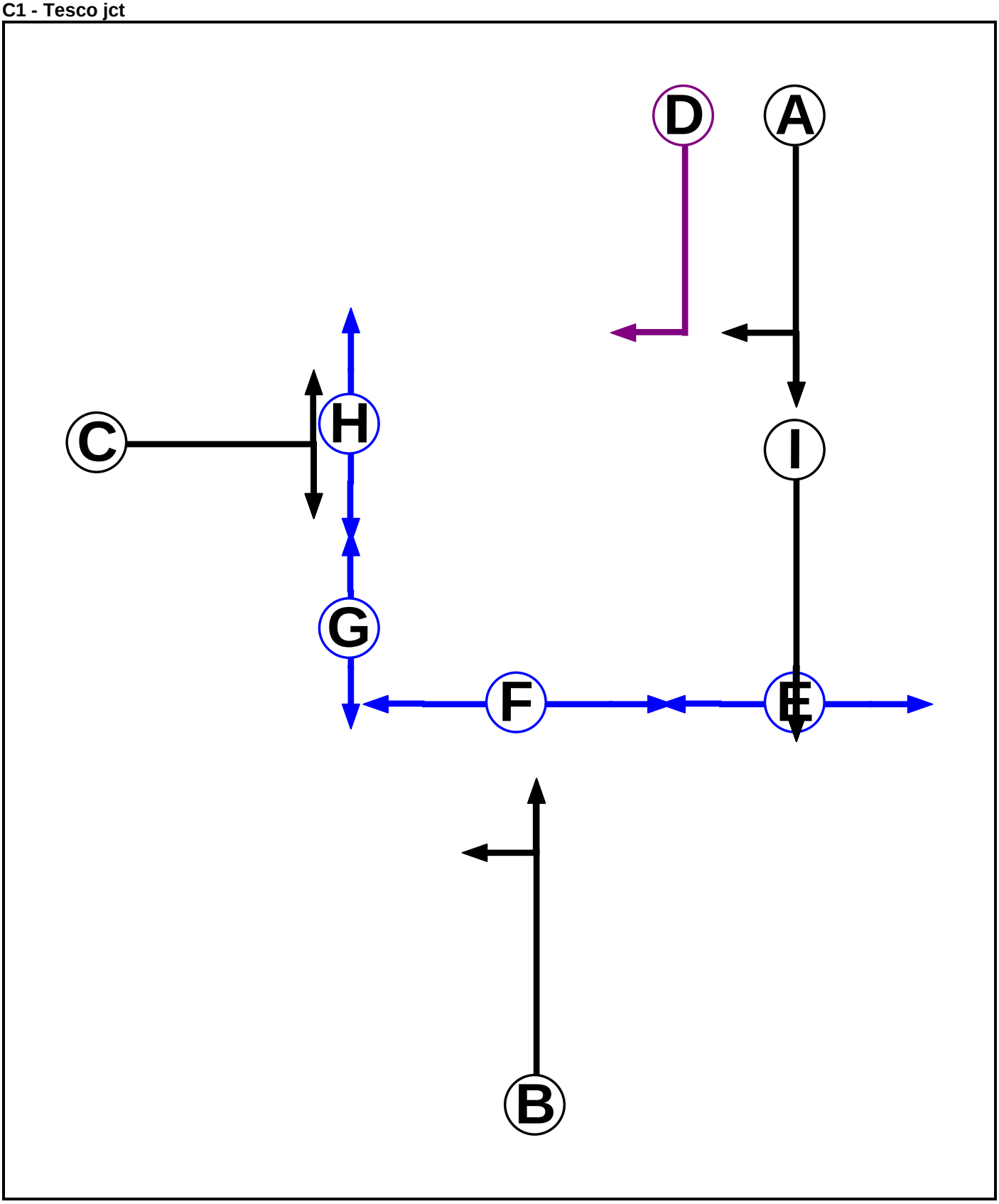

C2 - Falling Lane jct

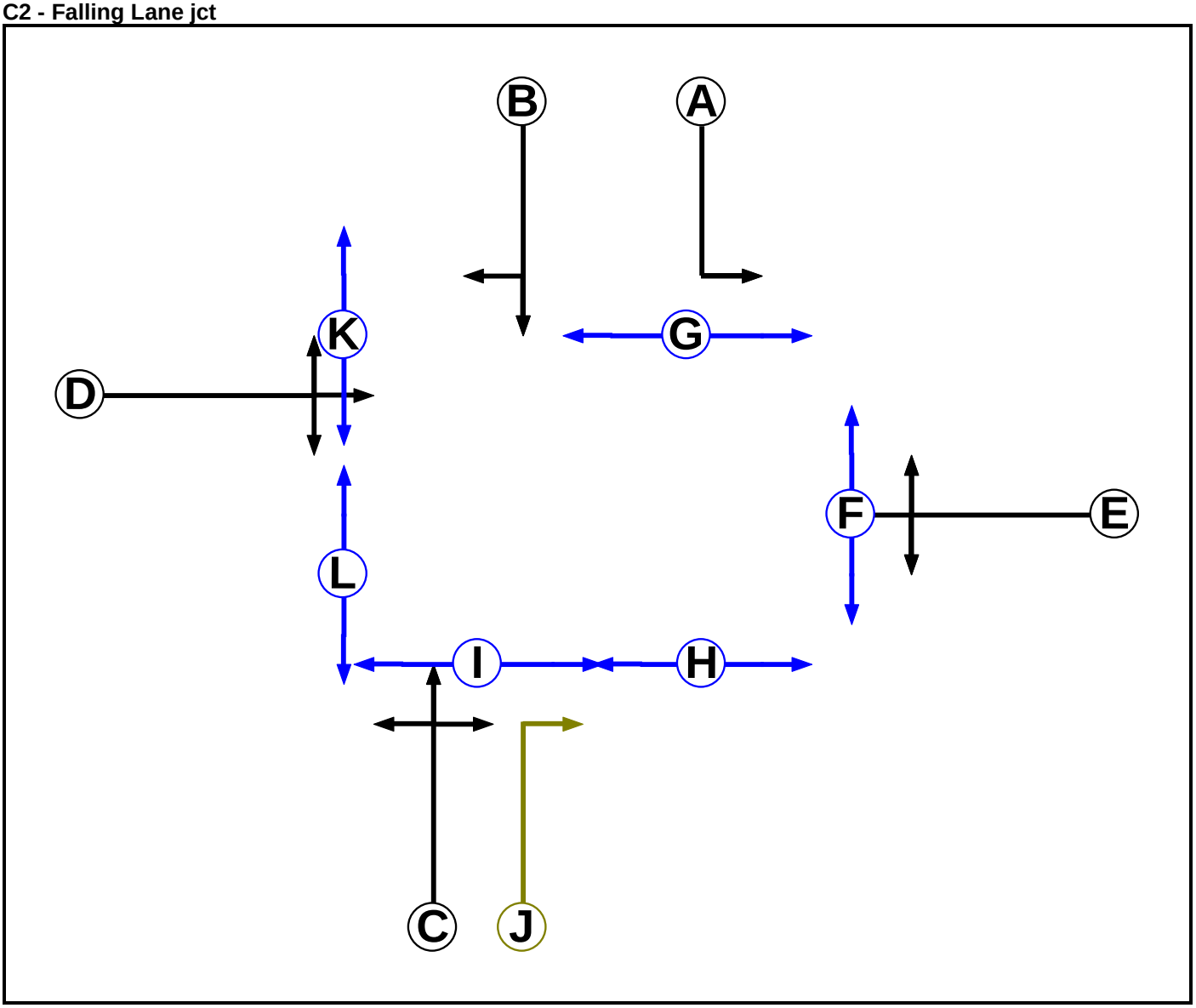

Phase Intergreens Matrix

C1 - Tesco jct

Terminating Phase \ Starting Phase	A	B	C	D	E	F	G	H	I
A		-	5	-	-	-	10	-	-
B	-		6	5	-	7	8	-	-
C	5	5		5	-	-	-	5	-
D	-	6	5		-	-	10	-	-
E	-	-	-	-		-	-	-	10
F	-	11	-	-	-		-	-	-
G	11	11	-	11	-	-		-	-
H	-	-	11	-	-	-	-		-
I	-	-	-	-	5	-	-	-	

C2 - Falling Lane jct

Terminating Phase \ Starting Phase	A	B	C	D	E	F	G	H	I	J	K	L
A		-	-	5	-	-	5	-	-	5	-	-
B	-		-	5	7	-	-	9	-	5	-	10
C	-	-		7	5	-	-	-	6	-	-	9
D	7	6	6		8	8	-	12	-	5	5	-
E	-	6	6	8		5	-	8	-	5	-	9
F	-	-	-	18	18		-	-	-	18	-	-
G	8	-	-	-	-	-		-	-	-	-	-
H	-	9	-	9	9	-	-		-	-	-	-
I	-	-	10	-	-	-	-	-		10	-	-
J	9	8	-	5	6	10	-	-	6		-	-
K	-	-	-	8	-	-	-	-	-	-		-
L	-	8	8	-	8	-	-	-	-	-	-	

Lane Input Data

Junction: J1: Tesco jct

Lane	Lane Type	Phases	Start Disp.	End Disp.	Physical Length (PCU)	Sat Flow Type	Def User Saturation Flow (PCU/Hr)	Lane Width (m)	Gradient	Nearside Lane	Turns	Turning Radius (m)
J1:1/1 (High Street N)	U	A	2	3	60.0	Geom	-	2.90	0.00	Y	Arm J1:6 Ahead	Inf
J1:1/2 (High Street N)	U	A	2	3	60.0	Geom	-	2.90	0.00	Y	Arm J1:6 Ahead	Inf

J1:1/3 (High Street N)	O	A D	2	3	6.1	Geom	-	2.90	0.00	Y	Arm J1:4 Right	8.74
J1:2/1 (Chantry Close)	U	C	2	3	1.7	Geom	-	3.00	0.00	Y	Arm J1:3 Left	5.50
J1:2/2 (Chantry Close)	U	C	2	3	60.0	Geom	-	3.00	0.00	Y	Arm J1:6 Right	11.40
J1:3/1 (High Street N Exit)	U		2	3	60.0	Inf	-	-	-	-	-	-
J1:3/2 (High Street N Exit)	U		2	3	60.0	Inf	-	-	-	-	-	-
J1:4/1 (Chantry Close Exit)	U		2	3	60.0	Inf	-	-	-	-	-	-
J1:5/1 (High Street internal NB)	U	B	2	3	13.6	Geom	-	3.00	0.00	Y	Arm J1:3 Ahead Arm J1:4 Left	Inf 12.70
J1:5/2 (High Street internal NB)	U	B	2	3	13.6	Geom	-	3.00	0.00	Y	Arm J1:3 Ahead	Inf
J1:6/1 (High Street SB)	U	I	2	3	2.1	Geom	-	3.25	0.00	Y	Arm J2:7 Ahead	Inf
J1:6/2 (High Street SB)	U	I	2	3	2.1	Geom	-	3.25	0.00	Y	Arm J2:7 Ahead	Inf

Junction: J2: Falling Lane jct

Lane	Lane Type	Phases	Start Disp.	End Disp.	Physical Length (PCU)	Sat Flow Type	Def User Saturation Flow (PCU/Hr)	Lane Width (m)	Gradient	Nearside Lane	Turns	Turning Radius (m)
J2:1/1 (Falling Lane)	U	E	2	3	60.0	Geom	-	3.20	0.00	Y	Arm J2:3 Left	7.70
J2:1/2 (Falling Lane)	U	E	2	3	12.5	Geom	-	3.20	0.00	Y	Arm J2:5 Ahead	Inf
											Arm J1:5 Right	16.00
J2:1/3 (Falling Lane)	U	E	2	3	4.0	Geom	-	3.18	0.00	Y	Arm J1:5 Right	13.30
J2:2/1 (Falling Lane Exit)	U		2	3	60.0	Inf	-	-	-	-	-	-
J2:2/2 (Falling Lane Exit)	U		2	3	60.0	Inf	-	-	-	-	-	-
J2:3/1 (High Street S Exit)	U		2	3	60.0	Inf	-	-	-	-	-	-
J2:3/2 (High Street S Exit)	U		2	3	60.0	Inf	-	-	-	-	-	-
J2:4/1 (High Street S)	U	C	2	3	60.0	Geom	-	2.50	0.00	Y	Arm J2:5 Left	9.80
											Arm J1:5 Ahead	Inf
J2:4/2 (High Street S)	U	C	2	3	4.0	Geom	-	2.51	0.00	Y	Arm J1:5 Ahead	Inf
J2:4/3 (High Street S)	U	C J	2	3	4.0	Geom	-	2.55	0.00	Y	Arm J2:2 Right	12.20
J2:5/1 (Trout Road Exit)	U		2	3	60.0	Inf	-	-	-	-	-	-
J2:6/1 (Trout Road)	U	D	2	3	60.0	Geom	-	3.70	0.00	Y	Arm J2:2 Ahead	Inf
											Arm J2:3 Right	17.50
											Arm J1:5 Left	8.16
J2:7/1 (High Street internal SB)	U	A	2	3	4.0	Geom	-	3.00	0.00	Y	Arm J2:2 Left	23.50
J2:7/2 (High Street internal SB)	U	A	2	3	12.2	Geom	-	3.00	0.00	Y	Arm J2:2 Left	31.30

J2:7/3 (High Street internal SB)	U	B	2	3	12.2	Geom	-	2.80	0.00	Y	Arm J2:3 Ahead	Inf
J2:7/4 (High Street internal SB)	U	B	2	3	12.2	Geom	-	2.80	0.00	Y	Arm J2:3 Ahead	Inf
J2:7/5 (High Street internal SB)	U	B	2	3	12.2	Geom	-	2.80	0.00	Y	Arm J2:5 Right	7.50

Lane Saturation Flows

Junction: J1: Tesco jct								
Lane	**Lane Width (m)**	**Gradient**	**Nearside Lane**	**Allowed Turns**	**Turning Radius (m)**	**Turning Prop.**	**Sat Flow (PCU/Hr)**	**Flared Sat Flow (PCU/Hr)**
J1:1/1 (High Street N)	2.90	0.00	Y	Arm J1:6 Ahead	Inf	100.0 %	1905	1905
J1:1/2 (High Street N)	2.90	0.00	Y	Arm J1:6 Ahead	Inf	100.0 %	1905	1905
J1:1/3 (High Street N)	2.90	0.00	Y	Arm J1:4 Right	8.74	100.0 %	1626	1626
J1:2/1 (Chantry Close)	3.00	0.00	Y	Arm J1:3 Left	5.50	100.0 %	1505	1505
J1:2/2 (Chantry Close)	3.00	0.00	Y	Arm J1:6 Right	11.40	100.0 %	1692	1692
J1:3/1 (High Street N Exit Lane 1)	Infinite Saturation Flow						Inf	Inf
J1:3/2 (High Street N Exit Lane 2)	Infinite Saturation Flow						Inf	Inf
J1:4/1 (Chantry Close Exit Lane 1)	Infinite Saturation Flow						Inf	Inf
J1:5/1 (High Street internal NB)	3.00	0.00	Y	Arm J1:3 Ahead	Inf	78.2 %	1867	1867
				Arm J1:4 Left	12.70	21.8 %		
J1:5/2 (High Street internal NB)	3.00	0.00	Y	Arm J1:3 Ahead	Inf	100.0 %	1915	1915
J1:6/1 (High Street SB)	3.25	0.00	Y	Arm J2:7 Ahead	Inf	100.0 %	1940	1940
J1:6/2 (High Street SB)	3.25	0.00	Y	Arm J2:7 Ahead	Inf	100.0 %	1940	1940

Junction: J2: Falling Lane jct

Lane	Lane Width (m)	Gradient	Nearside Lane	Allowed Turns	Turning Radius (m)	Turning Prop.	Sat Flow (PCU/Hr)	Flared Sat Flow (PCU/Hr)
J2:1/1 (Falling Lane)	3.20	0.00	Y	Arm J2:3 Left	7.70	100.0 %	1620	1620
J2:1/2 (Falling Lane)	3.20	0.00	Y	Arm J2:5 Ahead	Inf	19.5 %	1799	1799
				Arm J1:5 Right	16.00	80.5 %		
J2:1/3 (Falling Lane)	3.18	0.00	Y	Arm J1:5 Right	13.30	100.0 %	1737	1737
J2:2/1 (Falling Lane Exit Lane 1)	Infinite Saturation Flow						Inf	Inf
J2:2/2 (Falling Lane Exit Lane 2)	Infinite Saturation Flow						Inf	Inf
J2:3/1 (High Street S Exit Lane 1)	Infinite Saturation Flow						Inf	Inf
J2:3/2 (High Street S Exit Lane 2)	Infinite Saturation Flow						Inf	Inf
J2:4/1 (High Street S)	2.50	0.00	Y	Arm J2:5 Left	9.80	3.4 %	1855	1855
				Arm J1:5 Ahead	Inf	96.6 %		
J2:4/2 (High Street S)	2.51	0.00	Y	Arm J1:5 Ahead	Inf	100.0 %	1866	1866
J2:4/3 (High Street S)	2.55	0.00	Y	Arm J2:2 Right	12.20	100.0 %	1665	1665
J2:5/1 (Trout Road Exit Lane 1)	Infinite Saturation Flow						Inf	Inf
J2:6/1 (Trout Road)	3.70	0.00	Y	Arm J2:2 Ahead	Inf	41.5 %	1809	1809
				Arm J2:3 Right	17.50	10.4 %		
				Arm J1:5 Left	8.16	48.2 %		
J2:7/1 (High Street internal SB)	3.00	0.00	Y	Arm J2:2 Left	23.50	100.0 %	1800	1800
J2:7/2 (High Street internal SB)	3.00	0.00	Y	Arm J2:2 Left	31.30	100.0 %	1827	1827
J2:7/3 (High Street internal SB)	2.80	0.00	Y	Arm J2:3 Ahead	Inf	100.0 %	1895	1895
J2:7/4 (High Street internal SB)	2.80	0.00	Y	Arm J2:3 Ahead	Inf	100.0 %	1895	1895
J2:7/5 (High Street internal SB)	2.80	0.00	Y	Arm J2:5 Right	7.50	100.0 %	1579	1579

Lane Connector Input Data

Junction: J1: Tesco jct				
Org Lane	**Dest Lane**	**Junction**	**Mean Cruise Time**	**Platoon Dispersion**
J1:1/1	J1:6/1	Internal	3	35
J1:1/2	J1:6/2	Internal	3	35
J1:1/3	J1:4/1	Internal	5	35
J2:1/2	J1:5/1	Entering	12	35
J2:1/3	J1:5/2	Entering	12	35
J1:2/1	J1:3/1	Internal	5	35
J1:2/2	J1:6/1	Internal	4	35
J1:2/2	J1:6/2	Internal	4	35
J2:4/1	J1:5/1	Entering	12	35
J2:4/2	J1:5/2	Entering	12	35
J2:6/1	J1:5/1	Entering	10	35
J2:6/1	J1:5/2	Entering	10	35
J1:5/1	J1:3/1	Internal	5	35
J1:5/1	J1:4/1	Internal	5	35
J1:5/2	J1:3/2	Internal	5	35
J1:6/1	J2:7/2	Leaving	8	35
J1:6/1	J2:7/3	Leaving	8	35
J1:6/2	J2:7/4	Leaving	8	35
J1:6/2	J2:7/5	Leaving	8	35

Junction: J2: Falling Lane jct				
Org Lane	**Dest Lane**	**Junction**	**Mean Cruise Time**	**Platoon Dispersion**
J2:1/1	J2:3/1	Internal	5	35
J2:1/1	J2:3/2	Internal	5	35
J2:1/2	J2:5/1	Internal	5	35
J2:1/2	J1:5/1	Leaving	12	35
J2:1/3	J1:5/2	Leaving	12	35
J2:4/1	J2:5/1	Internal	5	35
J2:4/1	J1:5/1	Leaving	12	35
J2:4/2	J1:5/2	Leaving	12	35
J2:4/3	J2:2/2	Internal	5	35
J2:6/1	J2:2/2	Internal	5	35
J2:6/1	J2:3/2	Internal	5	35
J2:6/1	J1:5/1	Leaving	10	35
J2:6/1	J1:5/2	Leaving	10	35
J2:7/1	J2:2/1	Internal	5	35
J2:7/2	J2:2/2	Internal	5	35
J2:7/3	J2:3/1	Internal	5	35
J2:7/4	J2:3/2	Internal	5	35
J2:7/5	J2:5/1	Internal	5	35
J1:6/1	J2:7/2	Entering	8	35
J1:6/1	J2:7/3	Entering	8	35
J1:6/2	J2:7/4	Entering	8	35
J1:6/2	J2:7/5	Entering	8	35

Stage Sequence Diagram

C1 - Tesco jct

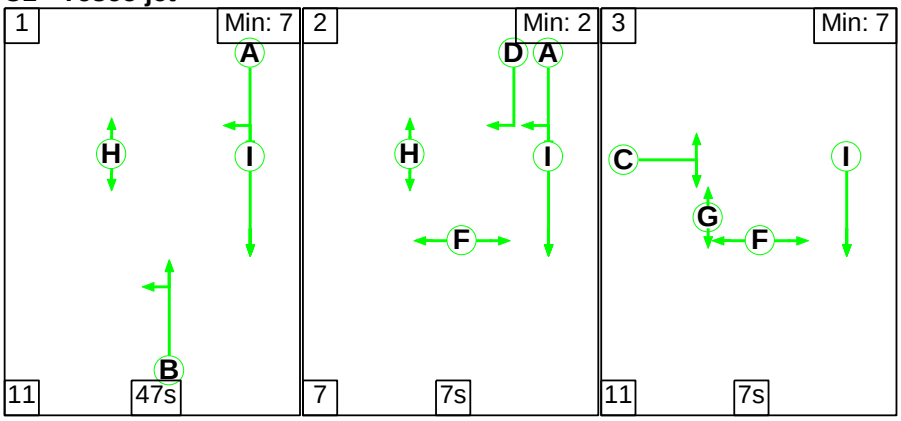

C2 - Falling Lane jct

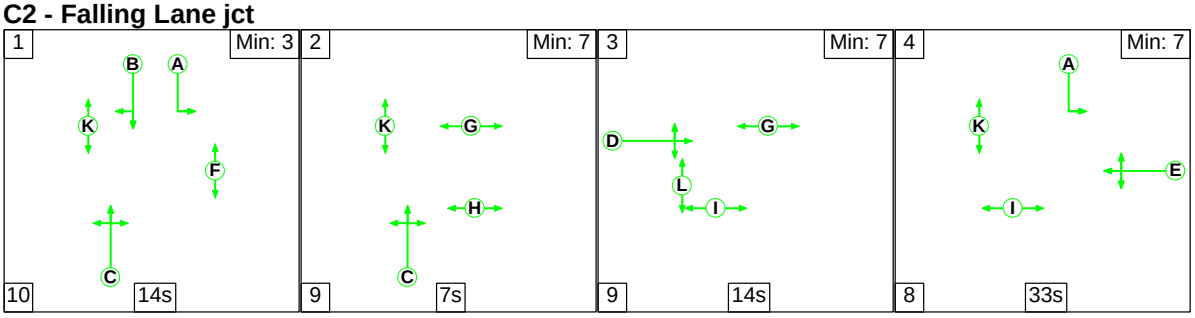

Signal Timings Diagram

C1 - Tesco jct

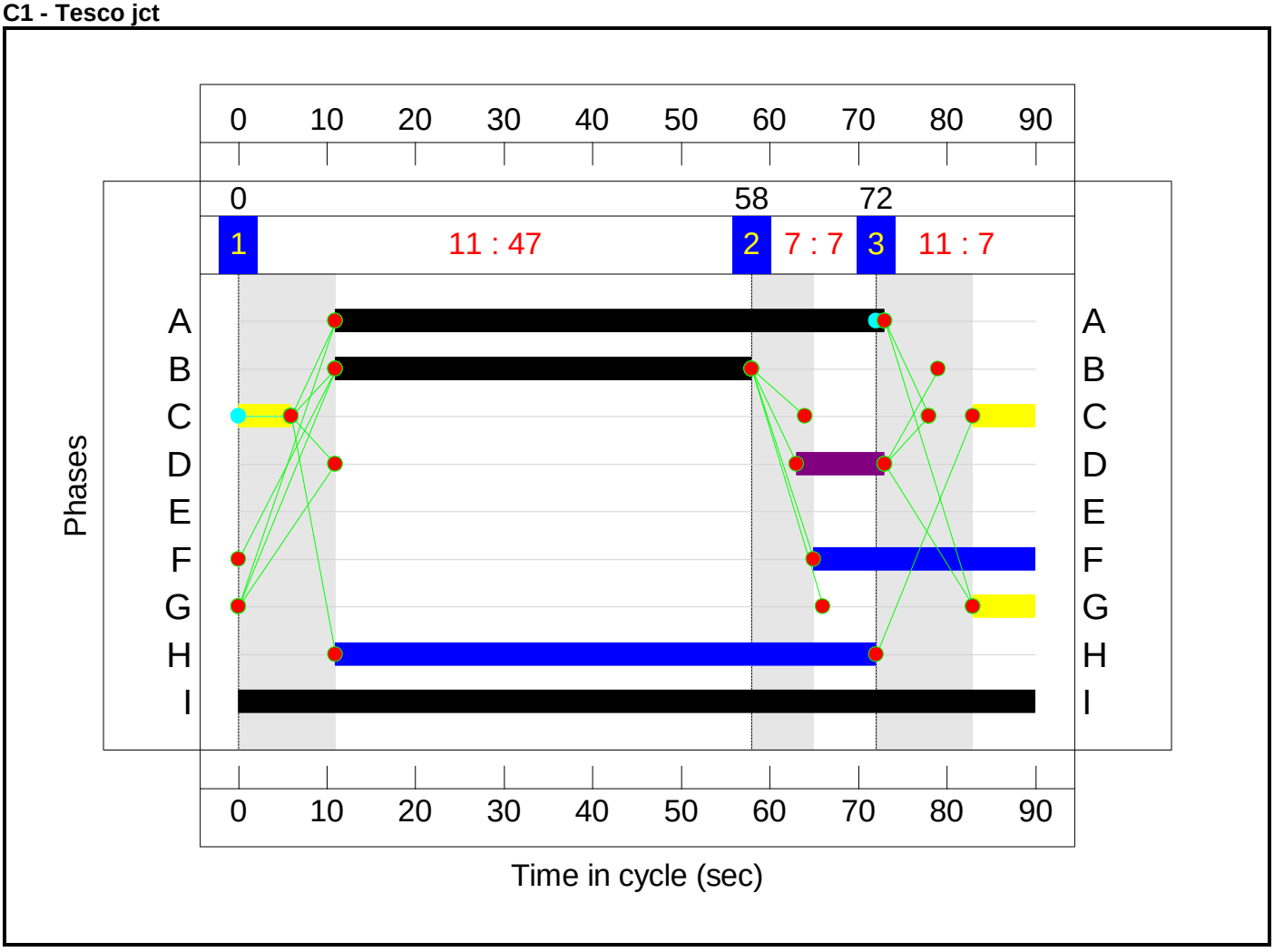

C2 - Falling Lane jct

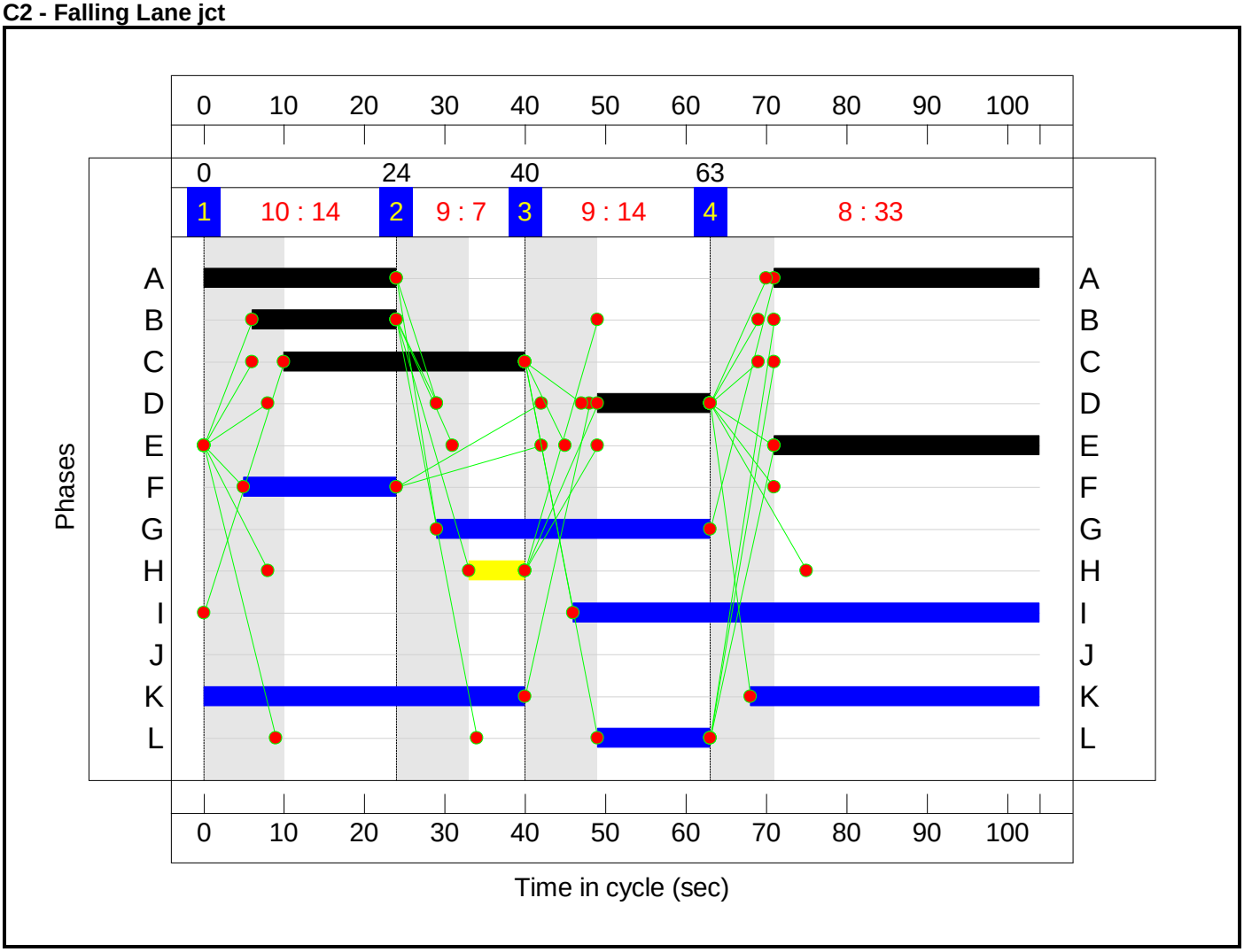

Network Results

Item	Lane Description	Lane Type	Full Phase	Arrow Phase	Num Greens	Total Green (s)	Arrow Green (s)	Demand Flow (pcu)	Sat Flow (pcu/Hr)	Capacity (pcu)	Deg Sat (%)	Turners In Gaps (pcu)	Turners When Unopposed (pcu)	Turners In Intergreen (pcu)	Total Delay (pcuHr)	Av. Delay Per PCU (s/pcu)	Mean Max Queue (pcu)
Network: Chantry Close/High Street	**-**	**-**	**-**		**-**	**-**	**-**	**-**	**-**	**-**	**66.2%**	**71**	**10**	**2**	**33.4**	**-**	**-**
J1: Tesco jct	**-**	**-**	**-**		**-**	**-**	**-**	**-**	**-**	**-**	**52.5%**	**71**	**10**	**2**	**9.3**	**-**	**-**
1/1	High Street N Ahead	U	C1:A		1	62	-	633	1905	1207	52.5%	-	-	-	2.1	12.2	9.2
1/2+1/3	High Street N Right Ahead	U+O	C1:A	C1:D	1	62	10	374	1905:1626	973+277	29.9 : 29.9%	71	10	2	1.1	10.3	3.3
2/2+2/1	Chantry Close Left Right	U	C1:C		1	13	-	123	1692:1505	161+130	42.2 : 42.2%	-	-	-	1.6	45.8	1.9
5/1	High Street internal NB Ahead Left	U	C1:B		1	47	-	476	1867	1037	45.9%	-	-	-	2.0	15.1	7.4
5/2	High Street internal NB Ahead	U	C1:B		1	47	-	495	1915	1064	46.5%	-	-	-	2.1	15.1	7.7
6/1	High Street SB Ahead	U	C1:I		1	90	-	695	1940	1768	39.3%	-	-	-	0.4	1.9	1.7
6/2	High Street SB Ahead	U	C1:I		1	90	-	297	1940	1768	16.8%	-	-	-	0.1	1.3	0.2
J2: Falling Lane jct	**-**	**-**	**-**		**-**	**-**	**-**	**-**	**-**	**-**	**66.2%**	**0**	**0**	**0**	**24.1**	**-**	**-**
1/1	Falling Lane Left	U	C2:E		1	33	-	152	1620	530	28.7%	-	-	-	1.3	30.8	3.5
1/2+1/3	Falling Lane Ahead Right	U	C2:E		1	33	-	472	1799:1737	364+349	66.2 : 66.2%	-	-	-	4.6	34.9	8.1
4/1	High Street S Left Ahead	U	C2:C		1	30	-	262	1855	553	47.4%	-	-	-	2.6	36.0	6.6
4/2+4/3	High Street S Right Ahead	U	C2:C	C2:J	1	30	0	372	1866:1665	364+269	58.7 : 58.7%	-	-	-	3.7	35.8	6.4

6/1	Trout Road Ahead Right Left	U	C2:D		1	14	-	164	1809	261	62.9%	-	-	-	2.7	60.1	5.3
7/2+7/1	High Street internal SB Left	U	C2:A		1	57	-	494	1827:1800	578+569	43.1 : 43.1%	-	-	-	2.0	14.5	4.0
7/3	High Street internal SB Ahead	U	C2:B		1	18	-	201	1895	346	58.1%	-	-	-	2.9	51.1	6.0
7/4	High Street internal SB Ahead	U	C2:B		1	18	-	228	1895	346	65.9%	-	-	-	3.5	54.5	7.0
7/5	High Street internal SB Right	U	C2:B		1	18	-	69	1579	288	23.9%	-	-	-	0.9	44.5	1.8

C1 - Tesco jct	PRC for Signalled Lanes (%):	71.5	Total Delay for Signalled Lanes (pcuHr):	9.33	Cycle Time (s): 90
C2 - Falling Lane jct	PRC for Signalled Lanes (%):	36.0	Total Delay for Signalled Lanes (pcuHr):	24.10	Cycle Time (s): 104
	PRC Over All Lanes (%):	36.0	Total Delay Over All Lanes(pcuHr):	33.43	

Scenario 5: '2025 Growth with Existing PM' (FG5: '2025+CD+Existing PM', Plan 2: 'Network Control Plan 2')

Network Layout Diagram

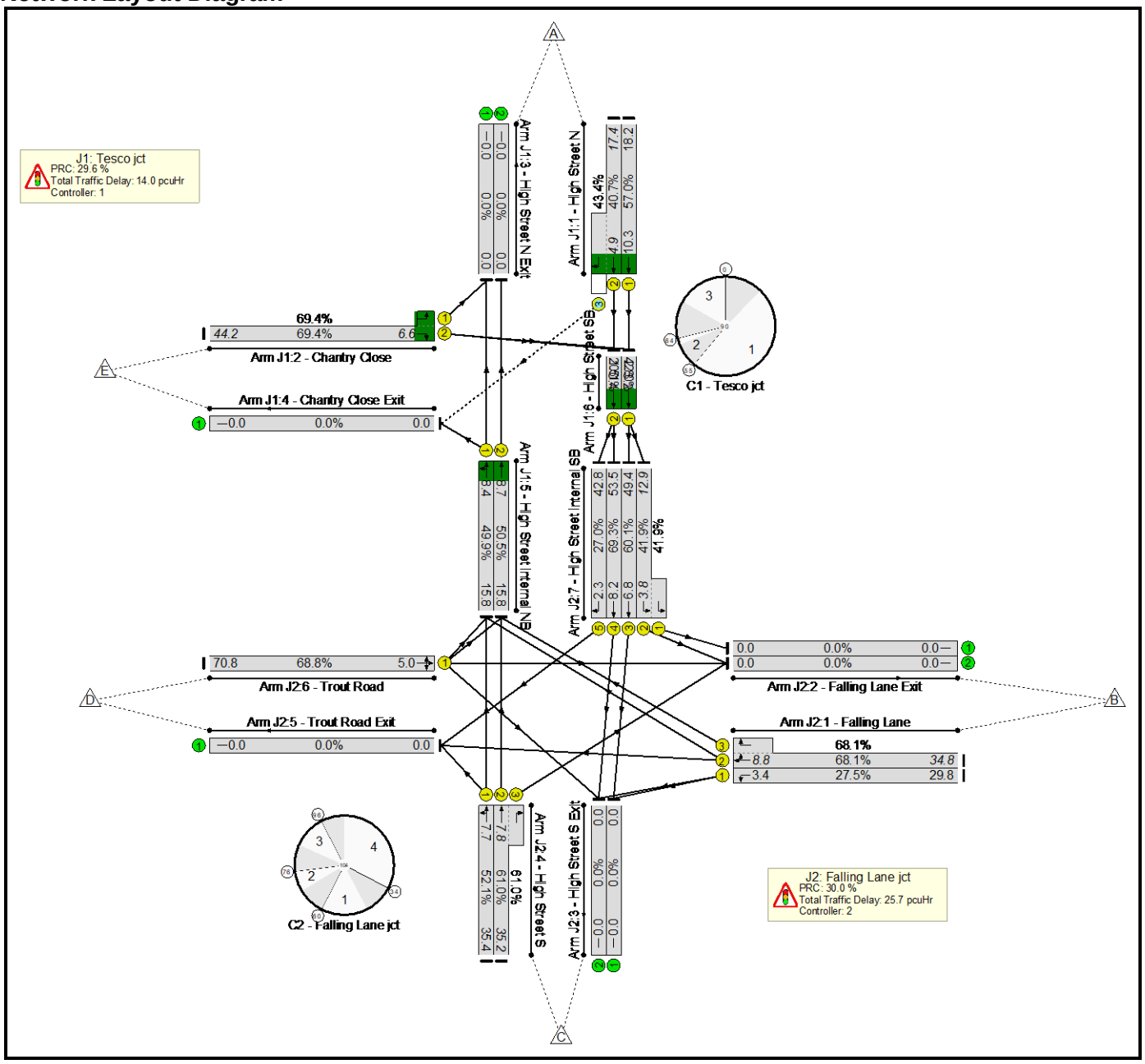

Phase Diagram
C1 - Tesco jct

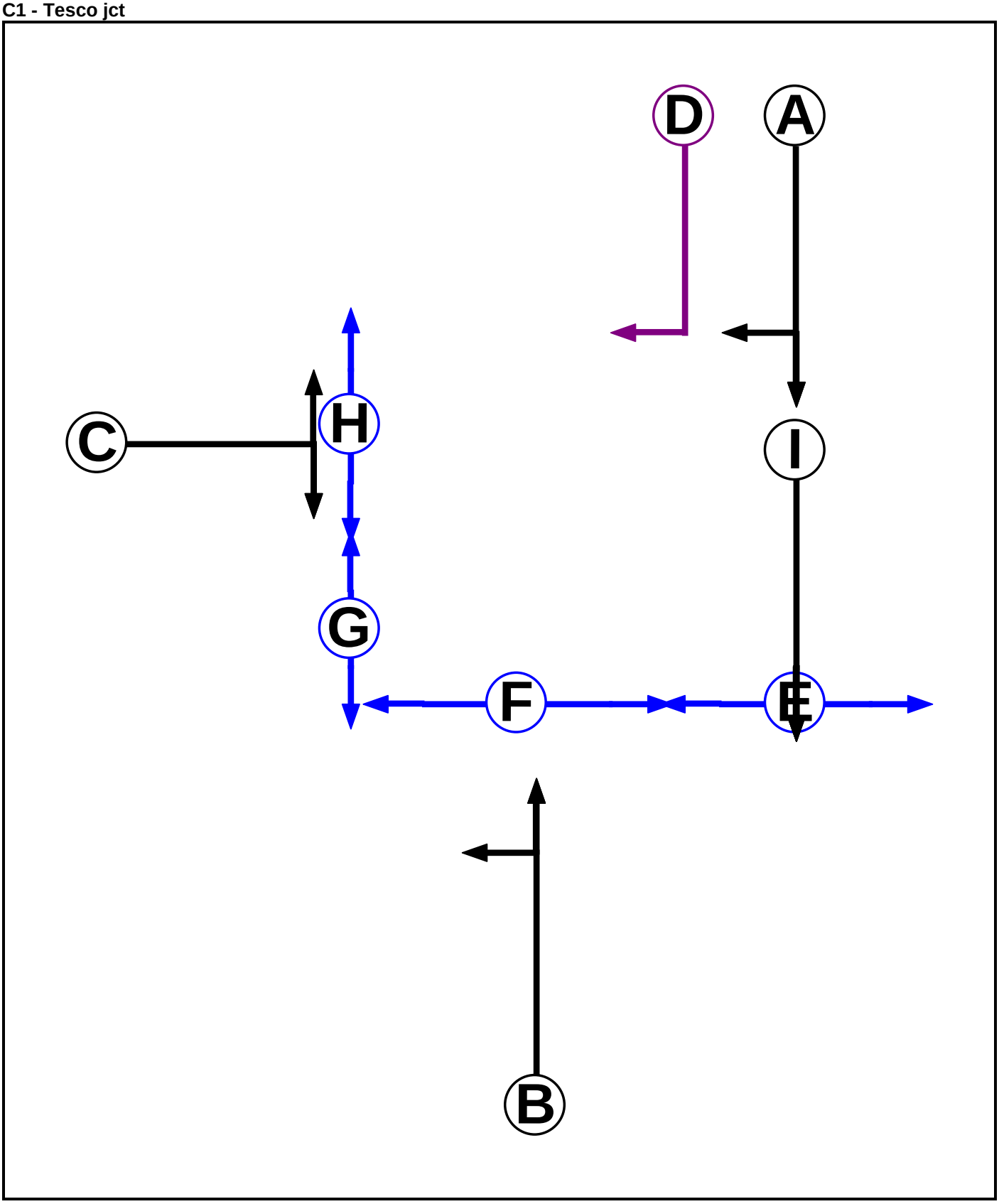

C2 - Falling Lane jct

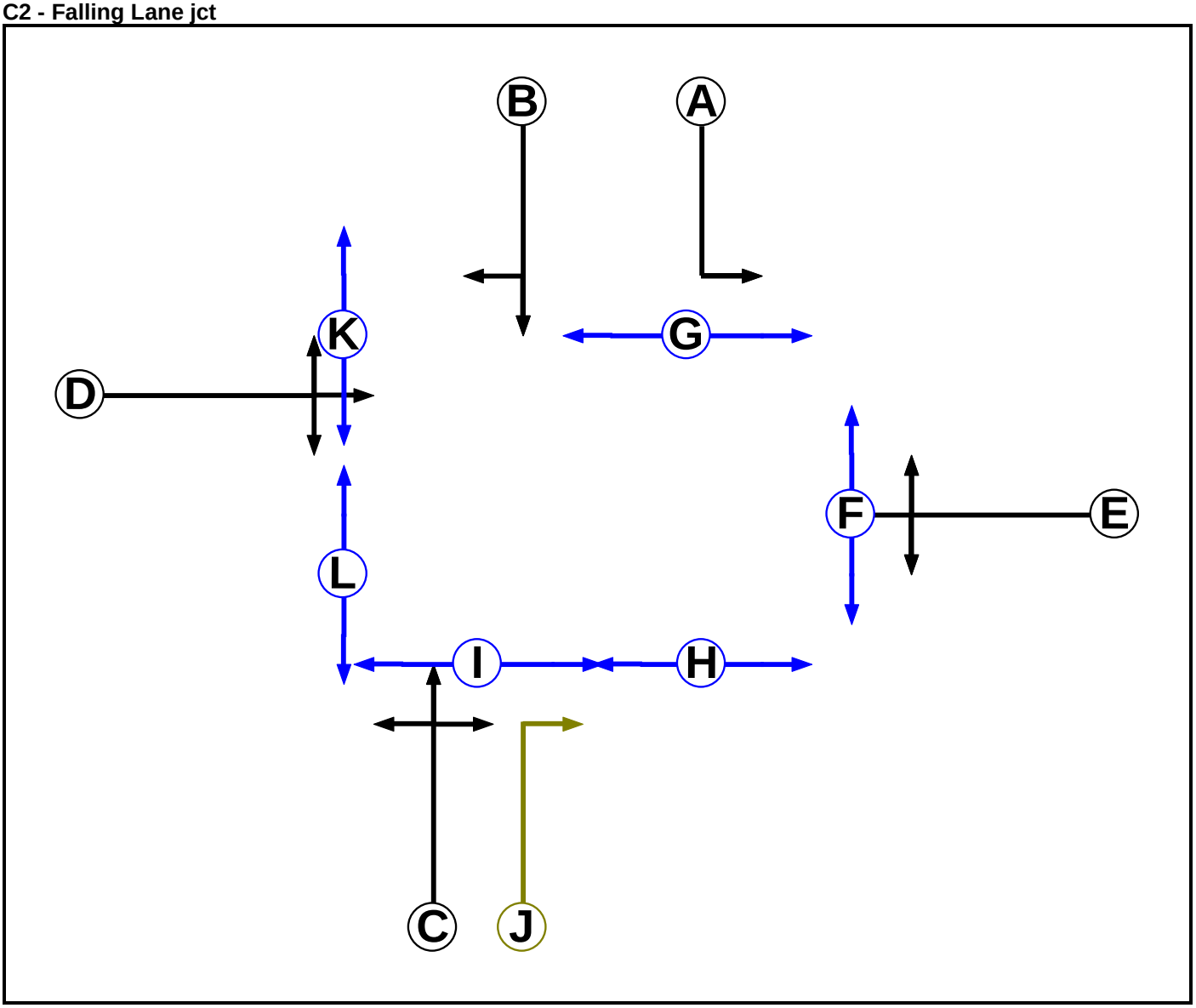

Phase Intergreens Matrix

C1 - Tesco jct

Terminating Phase \ Starting Phase	A	B	C	D	E	F	G	H	I
A		-	5	-	-	-	10	-	-
B	-		6	5	-	7	8	-	-
C	5	5		5	-	-	-	5	-
D	-	6	5		-	-	10	-	-
E	-	-	-	-		-	-	-	10
F	-	11	-	-	-		-	-	-
G	11	11	-	11	-	-		-	-
H	-	-	11	-	-	-	-		-
I	-	-	-	-	5	-	-	-	

C2 - Falling Lane jct

Terminating Phase \ Starting Phase	A	B	C	D	E	F	G	H	I	J	K	L
A		-	-	5	-	-	5	-	-	5	-	-
B	-		-	5	7	-	-	9	-	5	-	10
C	-	-		7	5	-	-	-	6	-	-	9
D	7	6	6		8	8	-	12	-	5	5	-
E	-	6	6	8		5	-	8	-	5	-	9
F	-	-	-	18	18		-	-	-	18	-	-
G	8	-	-	-	-	-		-	-	-	-	-
H	-	9	-	9	9	-	-		-	-	-	-
I	-	-	10	-	-	-	-	-		10	-	-
J	9	8	-	5	6	10	-	-	6		-	-
K	-	-	-	8	-	-	-	-	-	-		-
L	-	8	8	-	8	-	-	-	-	-	-	

Lane Input Data

Junction: J1: Tesco jct

Lane	Lane Type	Phases	Start Disp.	End Disp.	Physical Length (PCU)	Sat Flow Type	Def User Saturation Flow (PCU/Hr)	Lane Width (m)	Gradient	Nearside Lane	Turns	Turning Radius (m)
J1:1/1 (High Street N)	U	A	2	3	60.0	Geom	-	2.90	0.00	Y	Arm J1:6 Ahead	Inf
J1:1/2 (High Street N)	U	A	2	3	60.0	Geom	-	2.90	0.00	Y	Arm J1:6 Ahead	Inf

J1:1/3 (High Street N)	O	A D	2	3	6.1	Geom	-	2.90	0.00	Y	Arm J1:4 Right	8.74
J1:2/1 (Chantry Close)	U	C	2	3	1.7	Geom	-	3.00	0.00	Y	Arm J1:3 Left	5.50
J1:2/2 (Chantry Close)	U	C	2	3	60.0	Geom	-	3.00	0.00	Y	Arm J1:6 Right	11.40
J1:3/1 (High Street N Exit)	U		2	3	60.0	Inf	-	-	-	-	-	-
J1:3/2 (High Street N Exit)	U		2	3	60.0	Inf	-	-	-	-	-	-
J1:4/1 (Chantry Close Exit)	U		2	3	60.0	Inf	-	-	-	-	-	-
J1:5/1 (High Street internal NB)	U	B	2	3	13.6	Geom	-	3.00	0.00	Y	Arm J1:3 Ahead Arm J1:4 Left	Inf 12.70
J1:5/2 (High Street internal NB)	U	B	2	3	13.6	Geom	-	3.00	0.00	Y	Arm J1:3 Ahead	Inf
J1:6/1 (High Street SB)	U	I	2	3	2.1	Geom	-	3.25	0.00	Y	Arm J2:7 Ahead	Inf
J1:6/2 (High Street SB)	U	I	2	3	2.1	Geom	-	3.25	0.00	Y	Arm J2:7 Ahead	Inf

Junction: J2: Falling Lane jct

Lane	Lane Type	Phases	Start Disp.	End Disp.	Physical Length (PCU)	Sat Flow Type	Def User Saturation Flow (PCU/Hr)	Lane Width (m)	Gradient	Nearside Lane	Turns	Turning Radius (m)
J2:1/1 (Falling Lane)	U	E	2	3	60.0	Geom	-	3.20	0.00	Y	Arm J2:3 Left	7.70
J2:1/2 (Falling Lane)	U	E	2	3	12.5	Geom	-	3.20	0.00	Y	Arm J2:5 Ahead	Inf
											Arm J1:5 Right	16.00
J2:1/3 (Falling Lane)	U	E	2	3	4.0	Geom	-	3.18	0.00	Y	Arm J1:5 Right	13.30
J2:2/1 (Falling Lane Exit)	U		2	3	60.0	Inf	-	-	-	-	-	-
J2:2/2 (Falling Lane Exit)	U		2	3	60.0	Inf	-	-	-	-	-	-
J2:3/1 (High Street S Exit)	U		2	3	60.0	Inf	-	-	-	-	-	-
J2:3/2 (High Street S Exit)	U		2	3	60.0	Inf	-	-	-	-	-	-
J2:4/1 (High Street S)	U	C	2	3	60.0	Geom	-	2.50	0.00	Y	Arm J2:5 Left	9.80
											Arm J1:5 Ahead	Inf
J2:4/2 (High Street S)	U	C	2	3	4.0	Geom	-	2.51	0.00	Y	Arm J1:5 Ahead	Inf
J2:4/3 (High Street S)	U	C J	2	3	4.0	Geom	-	2.55	0.00	Y	Arm J2:2 Right	12.20
J2:5/1 (Trout Road Exit)	U		2	3	60.0	Inf	-	-	-	-	-	-
J2:6/1 (Trout Road)	U	D	2	3	60.0	Geom	-	3.70	0.00	Y	Arm J2:2 Ahead	Inf
											Arm J2:3 Right	17.50
											Arm J1:5 Left	8.16
J2:7/1 (High Street internal SB)	U	A	2	3	4.0	Geom	-	3.00	0.00	Y	Arm J2:2 Left	23.50
J2:7/2 (High Street internal SB)	U	A	2	3	12.2	Geom	-	3.00	0.00	Y	Arm J2:2 Left	31.30

J2:7/3 (High Street internal SB)	U	B	2	3	12.2	Geom	-	2.80	0.00	Y	Arm J2:3 Ahead	Inf
J2:7/4 (High Street internal SB)	U	B	2	3	12.2	Geom	-	2.80	0.00	Y	Arm J2:3 Ahead	Inf
J2:7/5 (High Street internal SB)	U	B	2	3	12.2	Geom	-	2.80	0.00	Y	Arm J2:5 Right	7.50

Lane Saturation Flows

Junction: J1: Tesco jct								
Lane	**Lane Width (m)**	**Gradient**	**Nearside Lane**	**Allowed Turns**	**Turning Radius (m)**	**Turning Prop.**	**Sat Flow (PCU/Hr)**	**Flared Sat Flow (PCU/Hr)**
J1:1/1 (High Street N)	2.90	0.00	Y	Arm J1:6 Ahead	Inf	100.0 %	1905	1905
J1:1/2 (High Street N)	2.90	0.00	Y	Arm J1:6 Ahead	Inf	100.0 %	1905	1905
J1:1/3 (High Street N)	2.90	0.00	Y	Arm J1:4 Right	8.74	100.0 %	1626	1626
J1:2/1 (Chantry Close)	3.00	0.00	Y	Arm J1:3 Left	5.50	100.0 %	1505	1505
J1:2/2 (Chantry Close)	3.00	0.00	Y	Arm J1:6 Right	11.40	100.0 %	1692	1692
J1:3/1 (High Street N Exit Lane 1)	Infinite Saturation Flow						Inf	Inf
J1:3/2 (High Street N Exit Lane 2)	Infinite Saturation Flow						Inf	Inf
J1:4/1 (Chantry Close Exit Lane 1)	Infinite Saturation Flow						Inf	Inf
J1:5/1 (High Street internal NB)	3.00	0.00	Y	Arm J1:3 Ahead	Inf	75.4 %	1861	1861
				Arm J1:4 Left	12.70	24.6 %		
J1:5/2 (High Street internal NB)	3.00	0.00	Y	Arm J1:3 Ahead	Inf	100.0 %	1915	1915
J1:6/1 (High Street SB)	3.25	0.00	Y	Arm J2:7 Ahead	Inf	100.0 %	1940	1940
J1:6/2 (High Street SB)	3.25	0.00	Y	Arm J2:7 Ahead	Inf	100.0 %	1940	1940

Junction: J2: Falling Lane jct

Lane	Lane Width (m)	Gradient	Nearside Lane	Allowed Turns	Turning Radius (m)	Turning Prop.	Sat Flow (PCU/Hr)	Flared Sat Flow (PCU/Hr)
J2:1/1 (Falling Lane)	3.20	0.00	Y	Arm J2:3 Left	7.70	100.0 %	1620	1620
J2:1/2 (Falling Lane)	3.20	0.00	Y	Arm J2:5 Ahead	Inf	17.3 %	1796	1796
				Arm J1:5 Right	16.00	82.7 %		
J2:1/3 (Falling Lane)	3.18	0.00	Y	Arm J1:5 Right	13.30	100.0 %	1737	1737
J2:2/1 (Falling Lane Exit Lane 1)	Infinite Saturation Flow						Inf	Inf
J2:2/2 (Falling Lane Exit Lane 2)	Infinite Saturation Flow						Inf	Inf
J2:3/1 (High Street S Exit Lane 1)	Infinite Saturation Flow						Inf	Inf
J2:3/2 (High Street S Exit Lane 2)	Infinite Saturation Flow						Inf	Inf
J2:4/1 (High Street S)	2.50	0.00	Y	Arm J2:5 Left	9.80	7.2 %	1845	1845
				Arm J1:5 Ahead	Inf	92.8 %		
J2:4/2 (High Street S)	2.51	0.00	Y	Arm J1:5 Ahead	Inf	100.0 %	1866	1866
J2:4/3 (High Street S)	2.55	0.00	Y	Arm J2:2 Right	12.20	100.0 %	1665	1665
J2:5/1 (Trout Road Exit Lane 1)	Infinite Saturation Flow						Inf	Inf
J2:6/1 (Trout Road)	3.70	0.00	Y	Arm J2:2 Ahead	Inf	44.4 %	1815	1815
				Arm J2:3 Right	17.50	8.3 %		
				Arm J1:5 Left	8.16	47.2 %		
J2:7/1 (High Street internal SB)	3.00	0.00	Y	Arm J2:2 Left	23.50	100.0 %	1800	1800
J2:7/2 (High Street internal SB)	3.00	0.00	Y	Arm J2:2 Left	31.30	100.0 %	1827	1827
J2:7/3 (High Street internal SB)	2.80	0.00	Y	Arm J2:3 Ahead	Inf	100.0 %	1895	1895
J2:7/4 (High Street internal SB)	2.80	0.00	Y	Arm J2:3 Ahead	Inf	100.0 %	1895	1895
J2:7/5 (High Street internal SB)	2.80	0.00	Y	Arm J2:5 Right	7.50	100.0 %	1579	1579

Lane Connector Input Data

Junction: J1: Tesco jct				
Org Lane	**Dest Lane**	**Junction**	**Mean Cruise Time**	**Platoon Dispersion**
J1:1/1	J1:6/1	Internal	3	35
J1:1/2	J1:6/2	Internal	3	35
J1:1/3	J1:4/1	Internal	5	35
J2:1/2	J1:5/1	Entering	12	35
J2:1/3	J1:5/2	Entering	12	35
J1:2/1	J1:3/1	Internal	5	35
J1:2/2	J1:6/1	Internal	4	35
J1:2/2	J1:6/2	Internal	4	35
J2:4/1	J1:5/1	Entering	12	35
J2:4/2	J1:5/2	Entering	12	35
J2:6/1	J1:5/1	Entering	10	35
J2:6/1	J1:5/2	Entering	10	35
J1:5/1	J1:3/1	Internal	5	35
J1:5/1	J1:4/1	Internal	5	35
J1:5/2	J1:3/2	Internal	5	35
J1:6/1	J2:7/2	Leaving	8	35
J1:6/1	J2:7/3	Leaving	8	35
J1:6/2	J2:7/4	Leaving	8	35
J1:6/2	J2:7/5	Leaving	8	35

Junction: J2: Falling Lane jct				
Org Lane	**Dest Lane**	**Junction**	**Mean Cruise Time**	**Platoon Dispersion**
J2:1/1	J2:3/1	Internal	5	35
J2:1/1	J2:3/2	Internal	5	35
J2:1/2	J2:5/1	Internal	5	35
J2:1/2	J1:5/1	Leaving	12	35
J2:1/3	J1:5/2	Leaving	12	35
J2:4/1	J2:5/1	Internal	5	35
J2:4/1	J1:5/1	Leaving	12	35
J2:4/2	J1:5/2	Leaving	12	35
J2:4/3	J2:2/2	Internal	5	35
J2:6/1	J2:2/2	Internal	5	35
J2:6/1	J2:3/2	Internal	5	35
J2:6/1	J1:5/1	Leaving	10	35
J2:6/1	J1:5/2	Leaving	10	35
J2:7/1	J2:2/1	Internal	5	35
J2:7/2	J2:2/2	Internal	5	35
J2:7/3	J2:3/1	Internal	5	35
J2:7/4	J2:3/2	Internal	5	35
J2:7/5	J2:5/1	Internal	5	35
J1:6/1	J2:7/2	Entering	8	35
J1:6/1	J2:7/3	Entering	8	35
J1:6/2	J2:7/4	Entering	8	35
J1:6/2	J2:7/5	Entering	8	35

Stage Sequence Diagram

C1 - Tesco jct

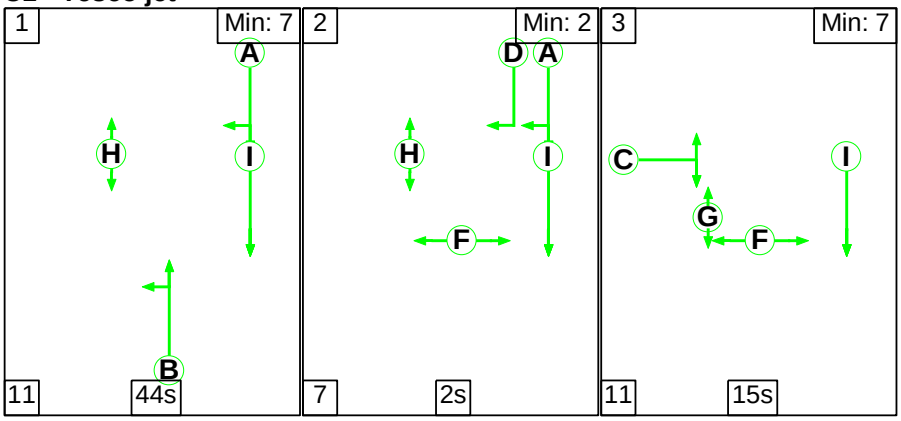

C2 - Falling Lane jct

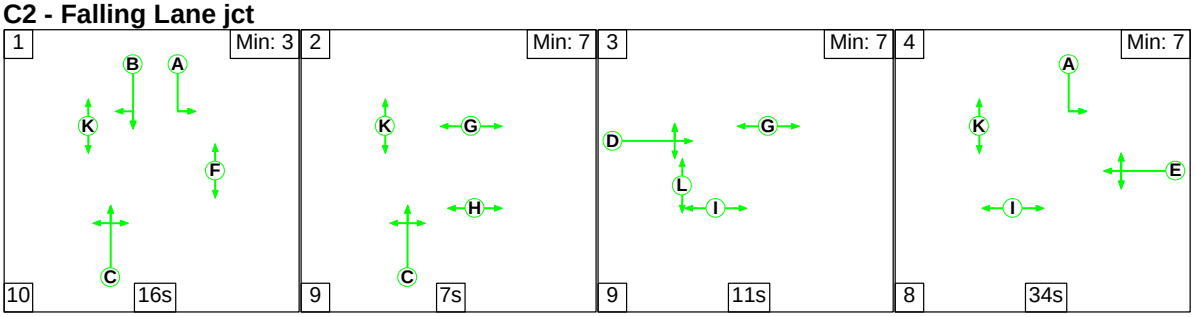

Signal Timings Diagram

C1 - Tesco jct

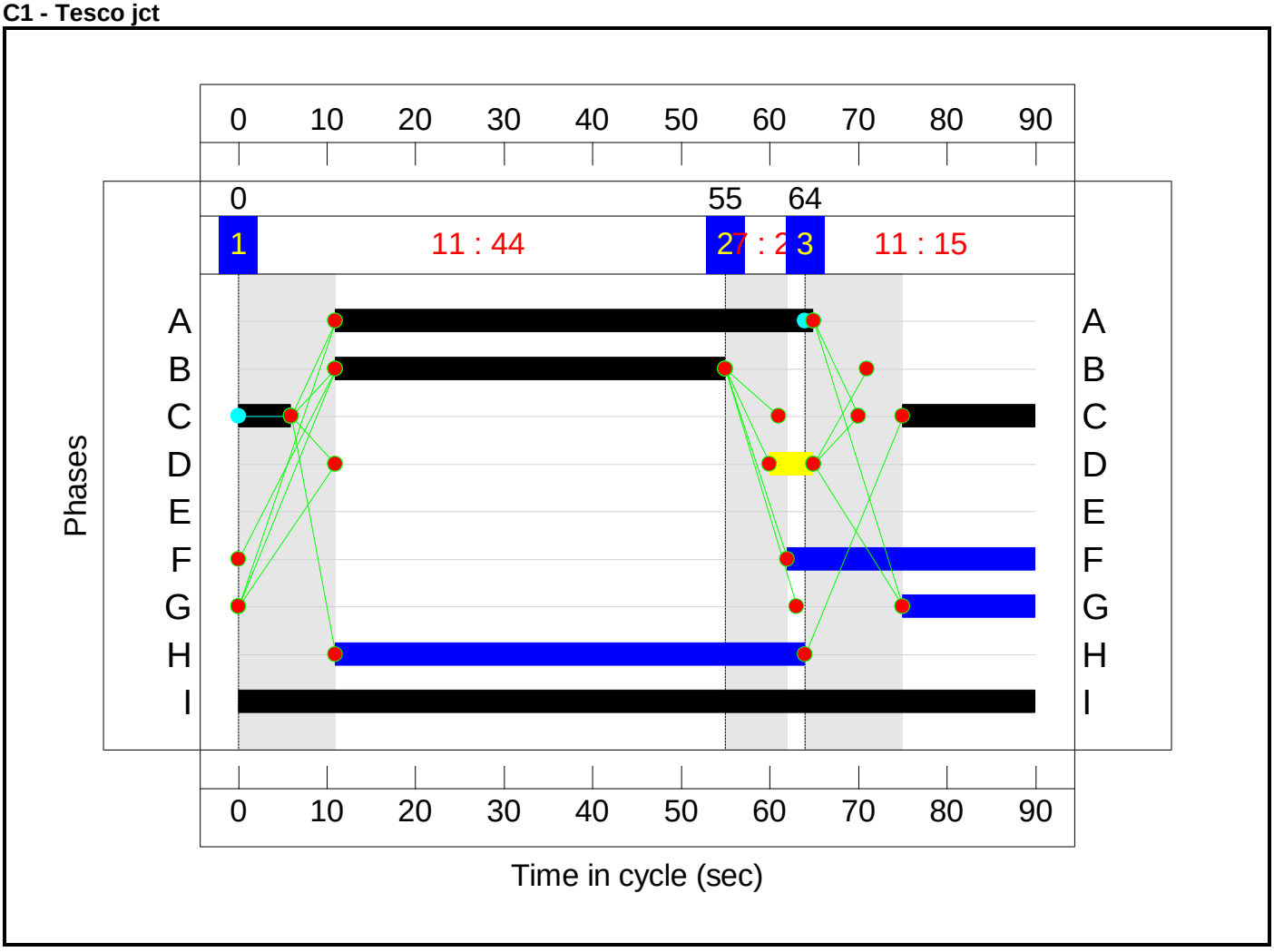

C2 - Falling Lane jct

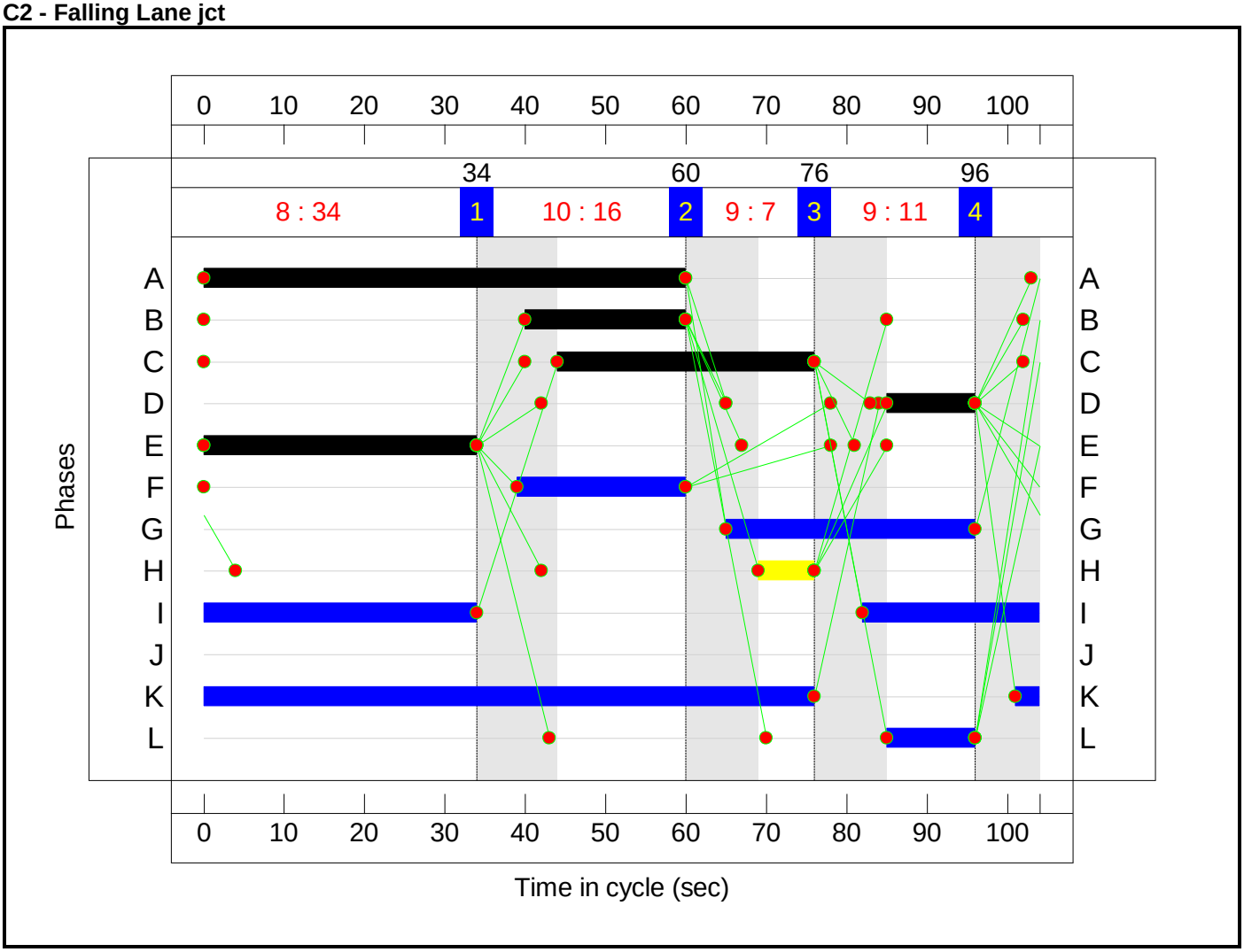

Network Results

Item	Lane Description	Lane Type	Full Phase	Arrow Phase	Num Greens	Total Green (s)	Arrow Green (s)	Demand Flow (pcu)	Sat Flow (pcu/Hr)	Capacity (pcu)	Deg Sat (%)	Turners In Gaps (pcu)	Turners When Unopposed (pcu)	Turners In Intergreen (pcu)	Total Delay (pcuHr)	Av. Delay Per PCU (s/pcu)	Mean Max Queue (pcu)
Network: Chantry Close/High Street	**-**	**-**	**-**		**-**	**-**	**-**	**-**	**-**	**-**	**69.4%**	**100**	**4**	**2**	**39.7**	**-**	**-**
J1: Tesco jct	**-**	**-**	**-**		**-**	**-**	**-**	**-**	**-**	**-**	**69.4%**	**100**	**4**	**2**	**14.0**	**-**	**-**
1/1	High Street N Ahead	U	C1:A		1	54	-	579	1905	1016	57.0%	-	-	-	2.9	18.2	10.3
1/2+1/3	High Street N Right Ahead	U+O	C1:A	C1:D	1	54	5	437	1905:1626	812+244	40.7 : 43.4%	100	4	2	2.1	17.4	4.9
2/2+2/1	Chantry Close Left Right	U	C1:C		1	21	-	297	1692:1505	251+177	69.4 : 69.4%	-	-	-	3.6	44.2	6.6
5/1	High Street internal NB Ahead Left	U	C1:B		1	44	-	516	1861	1034	49.9%	-	-	-	2.3	15.8	8.4
5/2	High Street internal NB Ahead	U	C1:B		1	44	-	537	1915	1064	50.5%	-	-	-	2.4	15.8	8.7
6/1	High Street SB Ahead	U	C1:I		1	90	-	733	1940	1746	42.0%	-	-	-	0.6	2.8	3.2
6/2	High Street SB Ahead	U	C1:I		1	90	-	351	1940	1746	20.1%	-	-	-	0.1	1.5	0.4
J2: Falling Lane jct	**-**	**-**	**-**		**-**	**-**	**-**	**-**	**-**	**-**	**69.3%**	**0**	**0**	**0**	**25.7**	**-**	**-**
1/1	Falling Lane Left	U	C2:E		1	34	-	150	1620	545	27.5%	-	-	-	1.2	29.8	3.4
1/2+1/3	Falling Lane Ahead Right	U	C2:E		1	34	-	497	1796:1737	373+357	68.1 : 68.1%	-	-	-	4.8	34.8	8.8
4/1	High Street S Left Ahead	U	C2:C		1	32	-	305	1845	585	52.1%	-	-	-	3.0	35.4	7.7
4/2+4/3	High Street S Right Ahead	U	C2:C	C2:J	1	32	0	396	1866:1665	408+241	61.0 : 61.0%	-	-	-	3.9	35.2	7.8

6/1	Trout Road Ahead Right Left	U	C2:D		1	11	-	144	1815	209	68.8%	-	-	-	2.8	70.8	5.0
7/2+7/1	High Street internal SB Left	U	C2:A		1	60	-	503	1827:1800	603+596	41.9 : 41.9%	-	-	-	1.8	12.9	3.8
7/3	High Street internal SB Ahead	U	C2:B		1	20	-	230	1895	383	60.1%	-	-	-	3.2	49.4	6.8
7/4	High Street internal SB Ahead	U	C2:B		1	20	-	265	1895	383	69.3%	-	-	-	3.9	53.5	8.2
7/5	High Street internal SB Right	U	C2:B		1	20	-	86	1579	319	27.0%	-	-	-	1.0	42.8	2.3

C1 - Tesco jct	PRC for Signalled Lanes (%):	29.6	Total Delay for Signalled Lanes (pcuHr):	14.02	Cycle Time (s): 90
C2 - Falling Lane jct	PRC for Signalled Lanes (%):	30.0	Total Delay for Signalled Lanes (pcuHr):	25.67	Cycle Time (s): 104
	PRC Over All Lanes (%):	29.6	Total Delay Over All Lanes(pcuHr):	39.69	

Scenario 6: '2025 Growth with Existing Sat' (FG6: '2025+CD+Existing Sat', Plan 2: 'Network Control Plan 2')

Network Layout Diagram

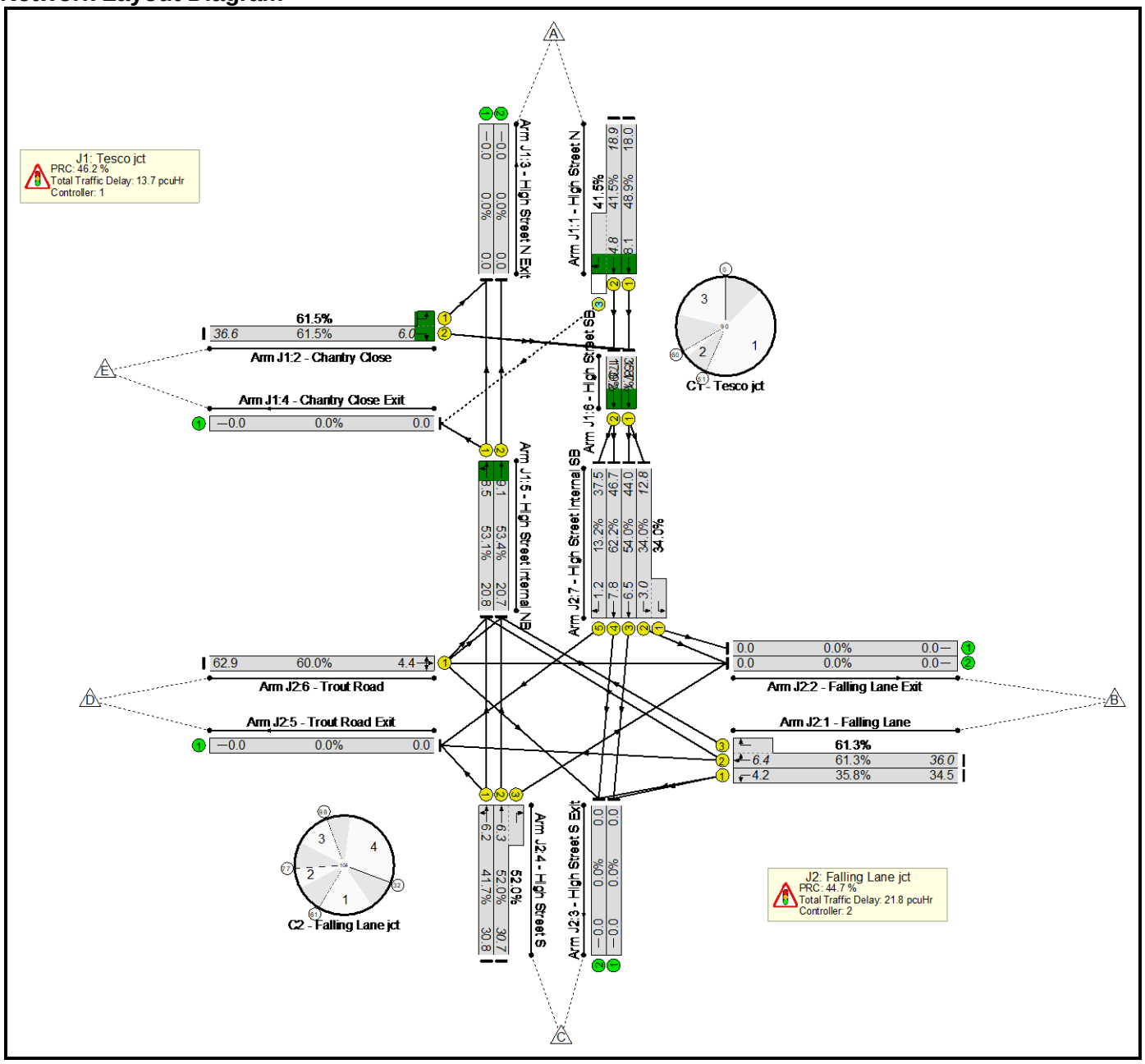

Phase Diagram
C1 - Tesco jct

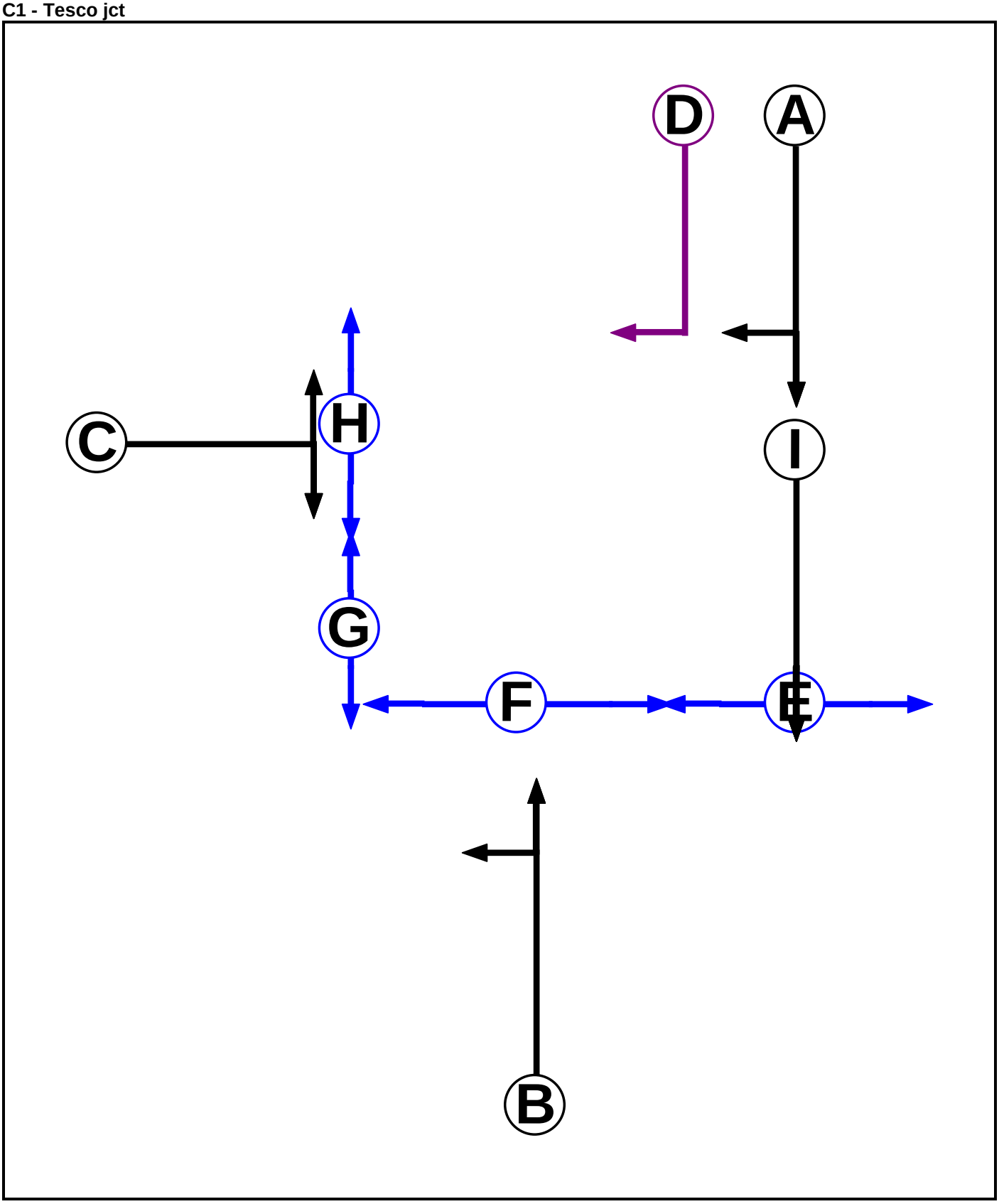

C2 - Falling Lane jct

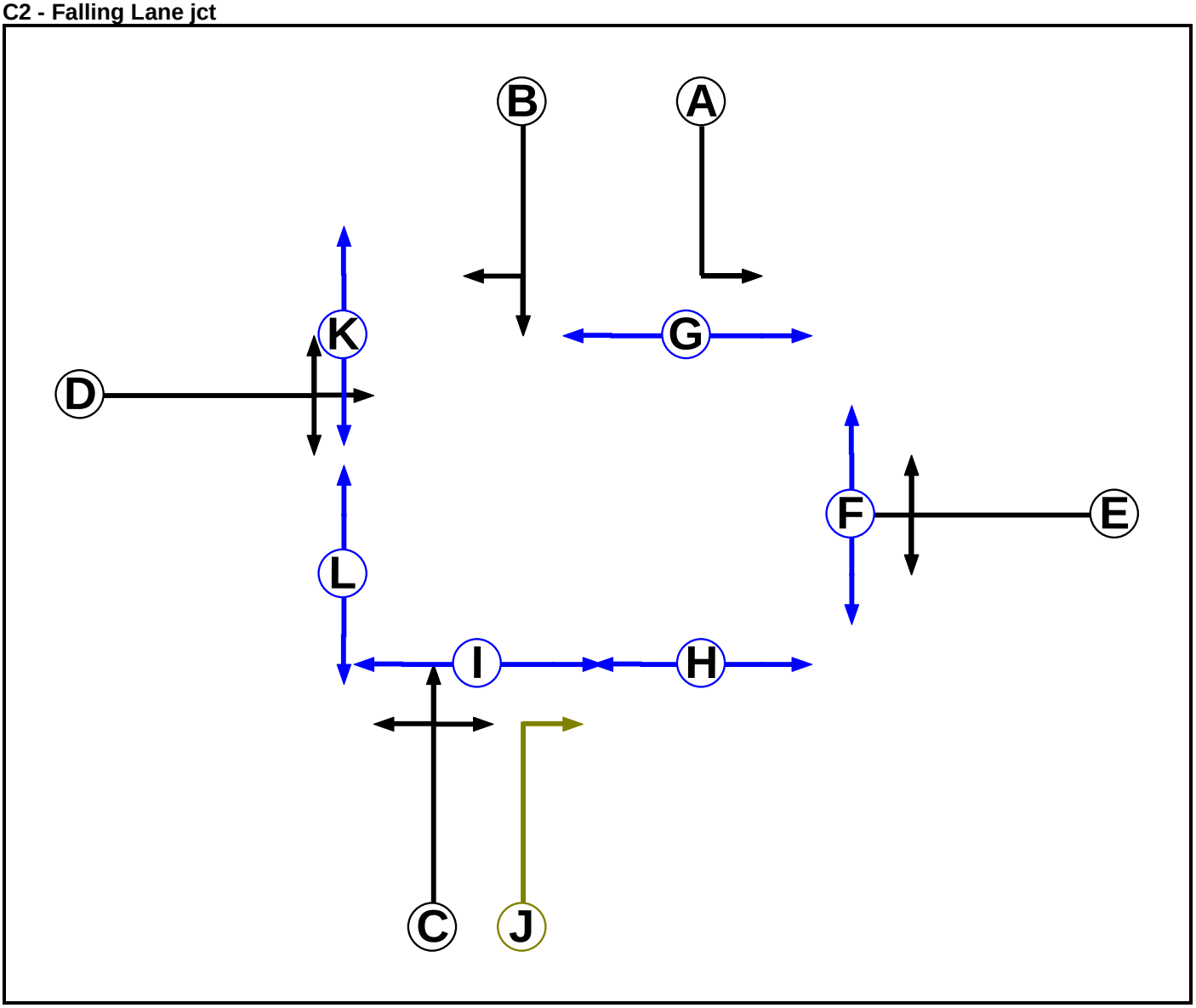

Phase Intergreens Matrix

C1 - Tesco jct

Terminating Phase \ Starting Phase	A	B	C	D	E	F	G	H	I
A		-	5	-	-	-	10	-	-
B	-		6	5	-	7	8	-	-
C	5	5		5	-	-	-	5	-
D	-	6	5		-	-	10	-	-
E	-	-	-	-		-	-	-	10
F	-	11	-	-	-		-	-	-
G	11	11	-	11	-	-		-	-
H	-	-	11	-	-	-	-		-
I	-	-	-	-	5	-	-	-	

C2 - Falling Lane jct

Terminating Phase \ Starting Phase	A	B	C	D	E	F	G	H	I	J	K	L
A		-	-	5	-	-	5	-	-	5	-	-
B	-		-	5	7	-	-	9	-	5	-	10
C	-	-		7	5	-	-	-	6	-	-	9
D	7	6	6		8	8	-	12	-	5	5	-
E	-	6	6	8		5	-	8	-	5	-	9
F	-	-	-	18	18		-	-	-	18	-	-
G	8	-	-	-	-	-		-	-	-	-	-
H	-	9	-	9	9	-	-		-	-	-	-
I	-	-	10	-	-	-	-	-		10	-	-
J	9	8	-	5	6	10	-	-	6		-	-
K	-	-	-	8	-	-	-	-	-	-		-
L	-	8	8	-	8	-	-	-	-	-	-	

Lane Input Data

Junction: J1: Tesco jct

Lane	Lane Type	Phases	Start Disp.	End Disp.	Physical Length (PCU)	Sat Flow Type	Def User Saturation Flow (PCU/Hr)	Lane Width (m)	Gradient	Nearside Lane	Turns	Turning Radius (m)
J1:1/1 (High Street N)	U	A	2	3	60.0	Geom	-	2.90	0.00	Y	Arm J1:6 Ahead	Inf
J1:1/2 (High Street N)	U	A	2	3	60.0	Geom	-	2.90	0.00	Y	Arm J1:6 Ahead	Inf

J1:1/3 (High Street N)	O	A D	2	3	6.1	Geom	-	2.90	0.00	Y	Arm J1:4 Right	8.74
J1:2/1 (Chantry Close)	U	C	2	3	1.7	Geom	-	3.00	0.00	Y	Arm J1:3 Left	5.50
J1:2/2 (Chantry Close)	U	C	2	3	60.0	Geom	-	3.00	0.00	Y	Arm J1:6 Right	11.40
J1:3/1 (High Street N Exit)	U		2	3	60.0	Inf	-	-	-	-	-	-
J1:3/2 (High Street N Exit)	U		2	3	60.0	Inf	-	-	-	-	-	-
J1:4/1 (Chantry Close Exit)	U		2	3	60.0	Inf	-	-	-	-	-	-
J1:5/1 (High Street internal NB)	U	B	2	3	13.6	Geom	-	3.00	0.00	Y	Arm J1:3 Ahead Arm J1:4 Left	Inf 12.70
J1:5/2 (High Street internal NB)	U	B	2	3	13.6	Geom	-	3.00	0.00	Y	Arm J1:3 Ahead	Inf
J1:6/1 (High Street SB)	U	I	2	3	2.1	Geom	-	3.25	0.00	Y	Arm J2:7 Ahead	Inf
J1:6/2 (High Street SB)	U	I	2	3	2.1	Geom	-	3.25	0.00	Y	Arm J2:7 Ahead	Inf

Junction: J2: Falling Lane jct

Lane	Lane Type	Phases	Start Disp.	End Disp.	Physical Length (PCU)	Sat Flow Type	Def User Saturation Flow (PCU/Hr)	Lane Width (m)	Gradient	Nearside Lane	Turns	Turning Radius (m)
J2:1/1 (Falling Lane)	U	E	2	3	60.0	Geom	-	3.20	0.00	Y	Arm J2:3 Left	7.70
J2:1/2 (Falling Lane)	U	E	2	3	12.5	Geom	-	3.20	0.00	Y	Arm J2:5 Ahead	Inf
											Arm J1:5 Right	16.00
J2:1/3 (Falling Lane)	U	E	2	3	4.0	Geom	-	3.18	0.00	Y	Arm J1:5 Right	13.30
J2:2/1 (Falling Lane Exit)	U		2	3	60.0	Inf	-	-	-	-	-	-
J2:2/2 (Falling Lane Exit)	U		2	3	60.0	Inf	-	-	-	-	-	-
J2:3/1 (High Street S Exit)	U		2	3	60.0	Inf	-	-	-	-	-	-
J2:3/2 (High Street S Exit)	U		2	3	60.0	Inf	-	-	-	-	-	-
J2:4/1 (High Street S)	U	C	2	3	60.0	Geom	-	2.50	0.00	Y	Arm J2:5 Left	9.80
											Arm J1:5 Ahead	Inf
J2:4/2 (High Street S)	U	C	2	3	4.0	Geom	-	2.51	0.00	Y	Arm J1:5 Ahead	Inf
J2:4/3 (High Street S)	U	C J	2	3	4.0	Geom	-	2.55	0.00	Y	Arm J2:2 Right	12.20
J2:5/1 (Trout Road Exit)	U		2	3	60.0	Inf	-	-	-	-	-	-
J2:6/1 (Trout Road)	U	D	2	3	60.0	Geom	-	3.70	0.00	Y	Arm J2:2 Ahead	Inf
											Arm J2:3 Right	17.50
											Arm J1:5 Left	8.16
J2:7/1 (High Street internal SB)	U	A	2	3	4.0	Geom	-	3.00	0.00	Y	Arm J2:2 Left	23.50
J2:7/2 (High Street internal SB)	U	A	2	3	12.2	Geom	-	3.00	0.00	Y	Arm J2:2 Left	31.30

J2:7/3 (High Street internal SB)	U	B	2	3	12.2	Geom	-	2.80	0.00	Y	Arm J2:3 Ahead	Inf
J2:7/4 (High Street internal SB)	U	B	2	3	12.2	Geom	-	2.80	0.00	Y	Arm J2:3 Ahead	Inf
J2:7/5 (High Street internal SB)	U	B	2	3	12.2	Geom	-	2.80	0.00	Y	Arm J2:5 Right	7.50

Lane Saturation Flows

Junction: J1: Tesco jct								
Lane	**Lane Width (m)**	**Gradient**	**Nearside Lane**	**Allowed Turns**	**Turning Radius (m)**	**Turning Prop.**	**Sat Flow (PCU/Hr)**	**Flared Sat Flow (PCU/Hr)**
J1:1/1 (High Street N)	2.90	0.00	Y	Arm J1:6 Ahead	Inf	100.0 %	1905	1905
J1:1/2 (High Street N)	2.90	0.00	Y	Arm J1:6 Ahead	Inf	100.0 %	1905	1905
J1:1/3 (High Street N)	2.90	0.00	Y	Arm J1:4 Right	8.74	100.0 %	1626	1626
J1:2/1 (Chantry Close)	3.00	0.00	Y	Arm J1:3 Left	5.50	100.0 %	1505	1505
J1:2/2 (Chantry Close)	3.00	0.00	Y	Arm J1:6 Right	11.40	100.0 %	1692	1692
J1:3/1 (High Street N Exit Lane 1)	Infinite Saturation Flow						Inf	Inf
J1:3/2 (High Street N Exit Lane 2)	Infinite Saturation Flow						Inf	Inf
J1:4/1 (Chantry Close Exit Lane 1)	Infinite Saturation Flow						Inf	Inf
J1:5/1 (High Street internal NB)	3.00	0.00	Y	Arm J1:3 Ahead	Inf	58.5 %	1826	1826
				Arm J1:4 Left	12.70	41.5 %		
J1:5/2 (High Street internal NB)	3.00	0.00	Y	Arm J1:3 Ahead	Inf	100.0 %	1915	1915
J1:6/1 (High Street SB)	3.25	0.00	Y	Arm J2:7 Ahead	Inf	100.0 %	1940	1940
J1:6/2 (High Street SB)	3.25	0.00	Y	Arm J2:7 Ahead	Inf	100.0 %	1940	1940

Junction: J2: Falling Lane jct

Lane	Lane Width (m)	Gradient	Nearside Lane	Allowed Turns	Turning Radius (m)	Turning Prop.	Sat Flow (PCU/Hr)	Flared Sat Flow (PCU/Hr)
J2:1/1 (Falling Lane)	3.20	0.00	Y	Arm J2:3 Left	7.70	100.0 %	1620	1620
J2:1/2 (Falling Lane)	3.20	0.00	Y	Arm J2:5 Ahead	Inf	12.0 %	1788	1788
				Arm J1:5 Right	16.00	88.0 %		
J2:1/3 (Falling Lane)	3.18	0.00	Y	Arm J1:5 Right	13.30	100.0 %	1737	1737
J2:2/1 (Falling Lane Exit Lane 1)	Infinite Saturation Flow						Inf	Inf
J2:2/2 (Falling Lane Exit Lane 2)	Infinite Saturation Flow						Inf	Inf
J2:3/1 (High Street S Exit Lane 1)	Infinite Saturation Flow						Inf	Inf
J2:3/2 (High Street S Exit Lane 2)	Infinite Saturation Flow						Inf	Inf
J2:4/1 (High Street S)	2.50	0.00	Y	Arm J2:5 Left	9.80	2.6 %	1858	1858
				Arm J1:5 Ahead	Inf	97.4 %		
J2:4/2 (High Street S)	2.51	0.00	Y	Arm J1:5 Ahead	Inf	100.0 %	1866	1866
J2:4/3 (High Street S)	2.55	0.00	Y	Arm J2:2 Right	12.20	100.0 %	1665	1665
J2:5/1 (Trout Road Exit Lane 1)	Infinite Saturation Flow						Inf	Inf
J2:6/1 (Trout Road)	3.70	0.00	Y	Arm J2:2 Ahead	Inf	35.1 %	1786	1786
				Arm J2:3 Right	17.50	8.2 %		
				Arm J1:5 Left	8.16	56.7 %		
J2:7/1 (High Street internal SB)	3.00	0.00	Y	Arm J2:2 Left	23.50	100.0 %	1800	1800
J2:7/2 (High Street internal SB)	3.00	0.00	Y	Arm J2:2 Left	31.30	100.0 %	1827	1827
J2:7/3 (High Street internal SB)	2.80	0.00	Y	Arm J2:3 Ahead	Inf	100.0 %	1895	1895
J2:7/4 (High Street internal SB)	2.80	0.00	Y	Arm J2:3 Ahead	Inf	100.0 %	1895	1895
J2:7/5 (High Street internal SB)	2.80	0.00	Y	Arm J2:5 Right	7.50	100.0 %	1579	1579

Lane Connector Input Data

Junction: J1: Tesco jct				
Org Lane	**Dest Lane**	**Junction**	**Mean Cruise Time**	**Platoon Dispersion**
J1:1/1	J1:6/1	Internal	3	35
J1:1/2	J1:6/2	Internal	3	35
J1:1/3	J1:4/1	Internal	5	35
J2:1/2	J1:5/1	Entering	12	35
J2:1/3	J1:5/2	Entering	12	35
J1:2/1	J1:3/1	Internal	5	35
J1:2/2	J1:6/1	Internal	4	35
J1:2/2	J1:6/2	Internal	4	35
J2:4/1	J1:5/1	Entering	12	35
J2:4/2	J1:5/2	Entering	12	35
J2:6/1	J1:5/1	Entering	10	35
J2:6/1	J1:5/2	Entering	10	35
J1:5/1	J1:3/1	Internal	5	35
J1:5/1	J1:4/1	Internal	5	35
J1:5/2	J1:3/2	Internal	5	35
J1:6/1	J2:7/2	Leaving	8	35
J1:6/1	J2:7/3	Leaving	8	35
J1:6/2	J2:7/4	Leaving	8	35
J1:6/2	J2:7/5	Leaving	8	35

Junction: J2: Falling Lane jct				
Org Lane	Dest Lane	Junction	Mean Cruise Time	Platoon Dispersion
J2:1/1	J2:3/1	Internal	5	35
J2:1/1	J2:3/2	Internal	5	35
J2:1/2	J2:5/1	Internal	5	35
J2:1/2	J1:5/1	Leaving	12	35
J2:1/3	J1:5/2	Leaving	12	35
J2:4/1	J2:5/1	Internal	5	35
J2:4/1	J1:5/1	Leaving	12	35
J2:4/2	J1:5/2	Leaving	12	35
J2:4/3	J2:2/2	Internal	5	35
J2:6/1	J2:2/2	Internal	5	35
J2:6/1	J2:3/2	Internal	5	35
J2:6/1	J1:5/1	Leaving	10	35
J2:6/1	J1:5/2	Leaving	10	35
J2:7/1	J2:2/1	Internal	5	35
J2:7/2	J2:2/2	Internal	5	35
J2:7/3	J2:3/1	Internal	5	35
J2:7/4	J2:3/2	Internal	5	35
J2:7/5	J2:5/1	Internal	5	35
J1:6/1	J2:7/2	Entering	8	35
J1:6/1	J2:7/3	Entering	8	35
J1:6/2	J2:7/4	Entering	8	35
J1:6/2	J2:7/5	Entering	8	35

Stage Sequence Diagram

C1 - Tesco jct

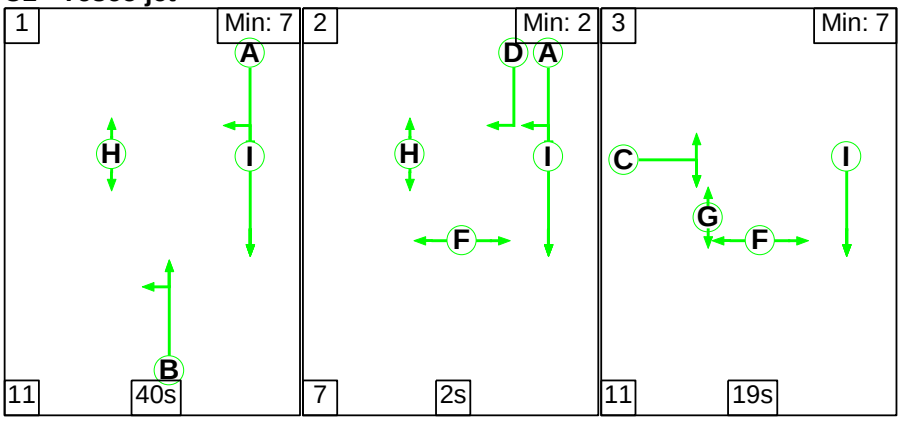

C2 - Falling Lane jct

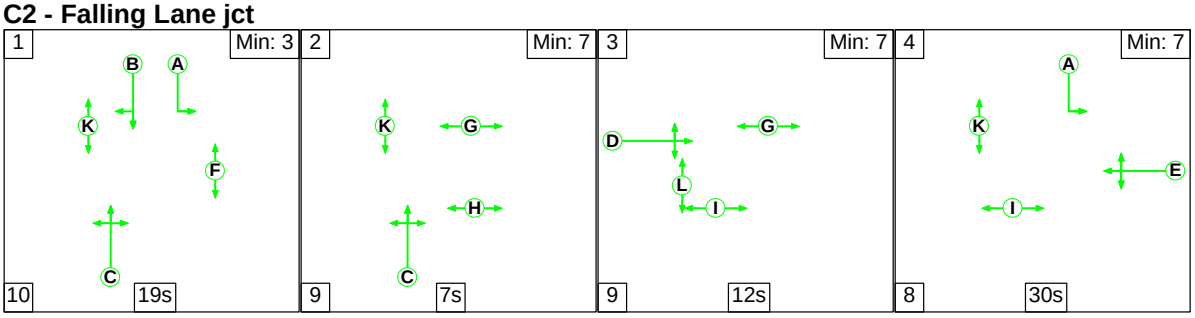

Signal Timings Diagram

C1 - Tesco jct

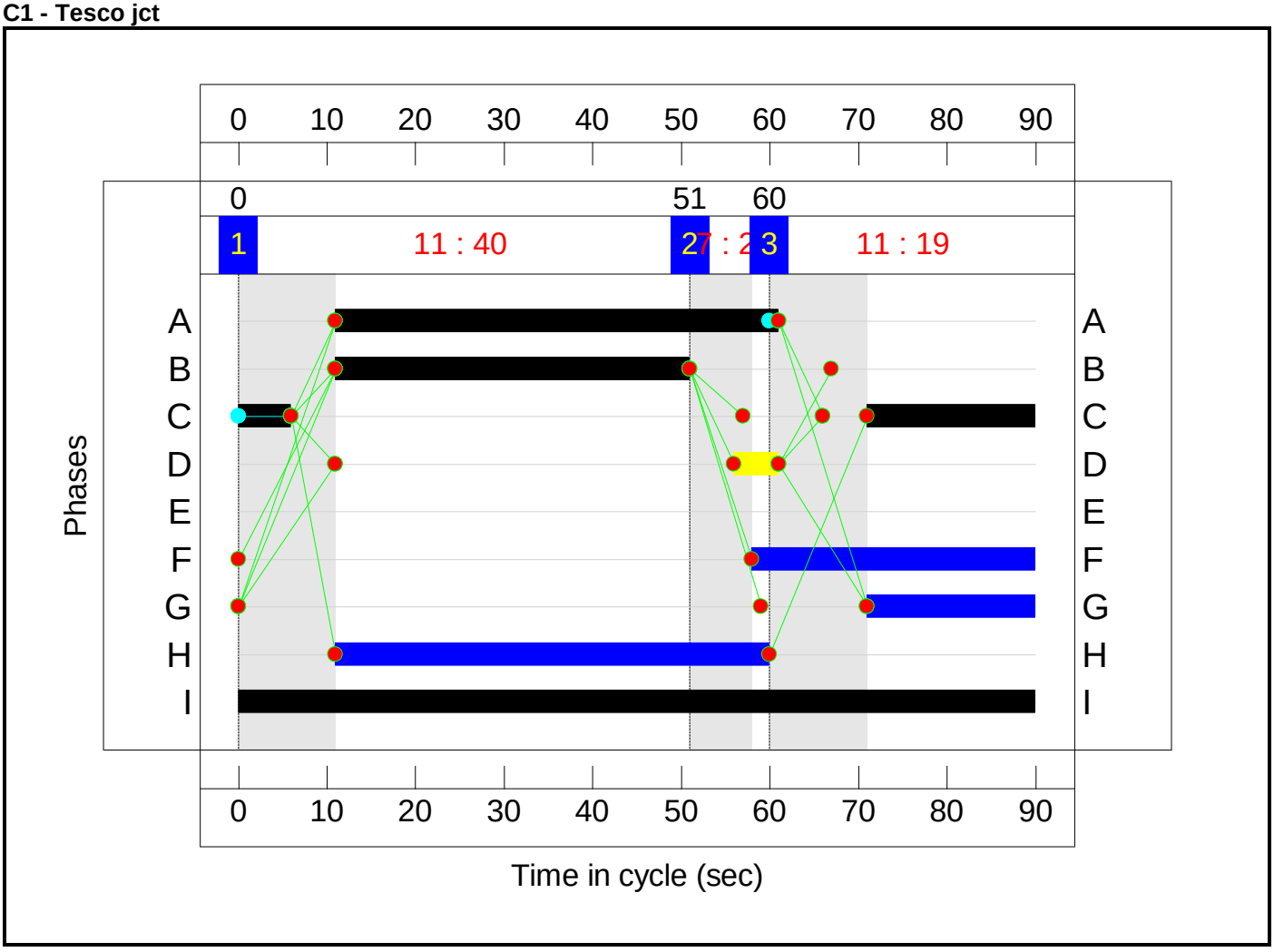

C2 - Falling Lane jct

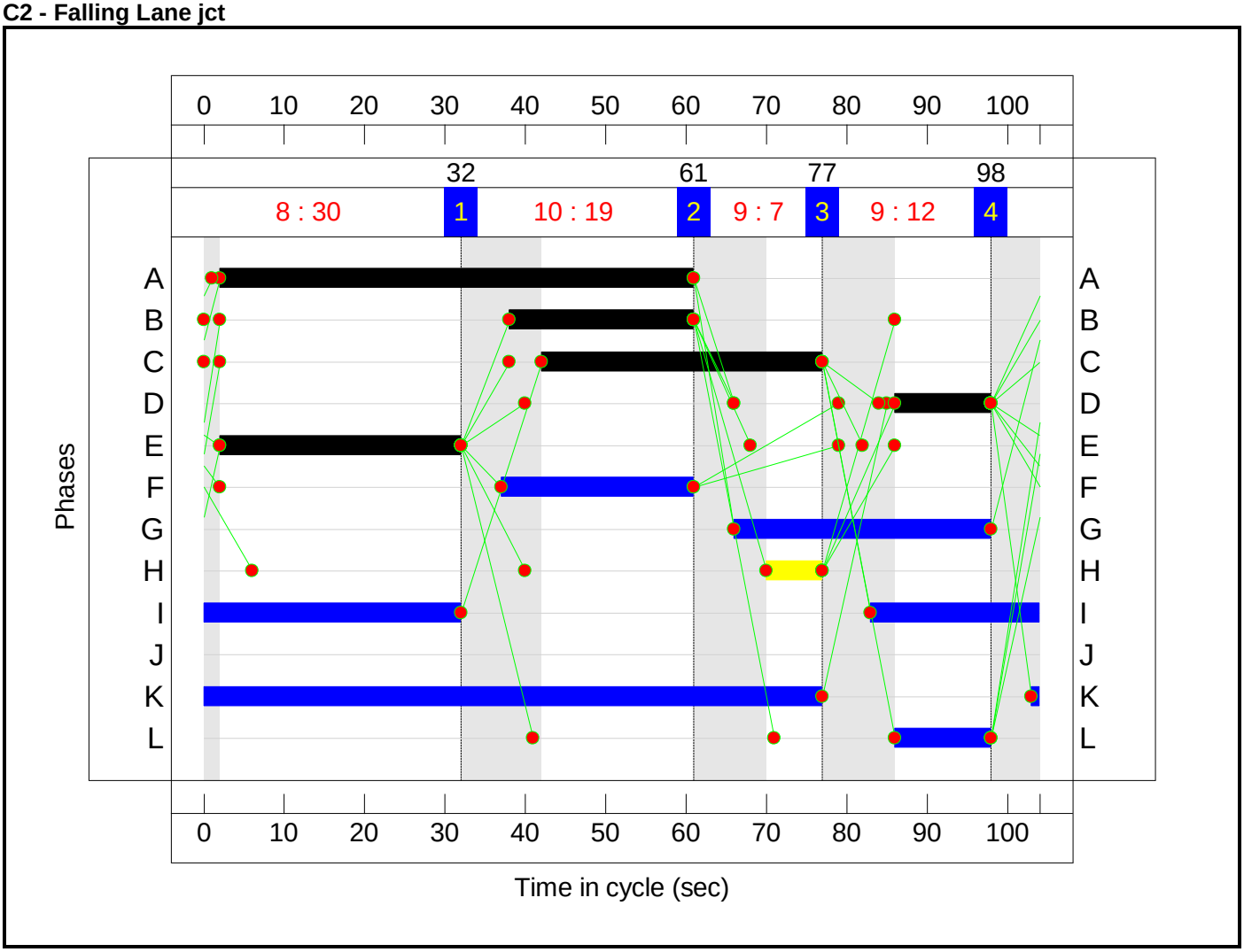

Network Results

Item	Lane Description	Lane Type	Full Phase	Arrow Phase	Num Greens	Total Green (s)	Arrow Green (s)	Demand Flow (pcu)	Sat Flow (pcu/Hr)	Capacity (pcu)	Deg Sat (%)	Turners In Gaps (pcu)	Turners When Unopposed (pcu)	Turners In Intergreen (pcu)	Total Delay (pcuHr)	Av. Delay Per PCU (s/pcu)	Mean Max Queue (pcu)
Network: Chantry Close/High Street	**-**	**-**	**-**		**-**	**-**	**-**	**-**	**-**	**-**	**62.2%**	**116**	**12**	**3**	**35.5**	**-**	**-**
J1: Tesco jct	**-**	**-**	**-**		**-**	**-**	**-**	**-**	**-**	**-**	**61.5%**	**116**	**12**	**3**	**13.7**	**-**	**-**
1/1	High Street N Ahead	U	C1:A		1	50	-	476	1905	974	48.9%	-	-	-	2.4	18.0	8.1
1/2+1/3	High Street N Right Ahead	U+O	C1:A	C1:D	1	50	5	436	1905:1626	738+313	41.5 : 41.5%	116	12	3	2.3	18.9	4.8
2/2+2/1	Chantry Close Left Right	U	C1:C		1	25	-	309	1692:1505	286+216	61.5 : 61.5%	-	-	-	3.1	36.6	6.0
5/1	High Street internal NB Ahead Left	U	C1:B		1	40	-	463	1826	872	53.1%	-	-	-	2.7	20.8	8.5
5/2	High Street internal NB Ahead	U	C1:B		1	40	-	489	1915	915	53.4%	-	-	-	2.8	20.7	9.1
6/1	High Street SB Ahead	U	C1:I		1	90	-	638	1940	1789	35.7%	-	-	-	0.3	1.8	1.1
6/2	High Street SB Ahead	U	C1:I		1	90	-	320	1940	1789	17.9%	-	-	-	0.1	1.3	0.2
J2: Falling Lane jct	**-**	**-**	**-**		**-**	**-**	**-**	**-**	**-**	**-**	**62.2%**	**0**	**0**	**0**	**21.8**	**-**	**-**
1/1	Falling Lane Left	U	C2:E		1	30	-	173	1620	483	35.8%	-	-	-	1.7	34.5	4.2
1/2+1/3	Falling Lane Ahead Right	U	C2:E		1	30	-	406	1788:1737	326+336	61.3 : 61.3%	-	-	-	4.1	36.0	6.4
4/1	High Street S Left Ahead	U	C2:C		1	35	-	268	1858	643	41.7%	-	-	-	2.3	30.8	6.2
4/2+4/3	High Street S Right Ahead	U	C2:C	C2:J	1	35	0	362	1866:1665	448+248	52.0 : 52.0%	-	-	-	3.1	30.7	6.3

6/1	Trout Road Ahead Right Left	U	C2:D		1	12	-	134	1786	223	60.0%	-	-	-	2.3	62.9	4.4
7/2+7/1	High Street internal SB Left	U	C2:A		1	59	-	402	1827:1800	594+588	34.0 : 34.0%	-	-	-	1.4	12.8	3.0
7/3	High Street internal SB Ahead	U	C2:B		1	23	-	236	1895	437	54.0%	-	-	-	2.9	44.0	6.5
7/4	High Street internal SB Ahead	U	C2:B		1	23	-	272	1895	437	62.2%	-	-	-	3.5	46.7	7.8
7/5	High Street internal SB Right	U	C2:B		1	23	-	48	1579	364	13.2%	-	-	-	0.5	37.5	1.2

C1 - Tesco jct	PRC for Signalled Lanes (%):	46.2	Total Delay for Signalled Lanes (pcuHr):	13.74	Cycle Time (s): 90
C2 - Falling Lane jct	PRC for Signalled Lanes (%):	44.7	Total Delay for Signalled Lanes (pcuHr):	21.78	Cycle Time (s): 104
	PRC Over All Lanes (%):	44.7	Total Delay Over All Lanes(pcuHr):	35.52	

Scenario 7: '2025 Growth with Development AM' (FG7: '2025+CD+Development AM', Plan 2: 'Network Control Plan 2')

Network Layout Diagram

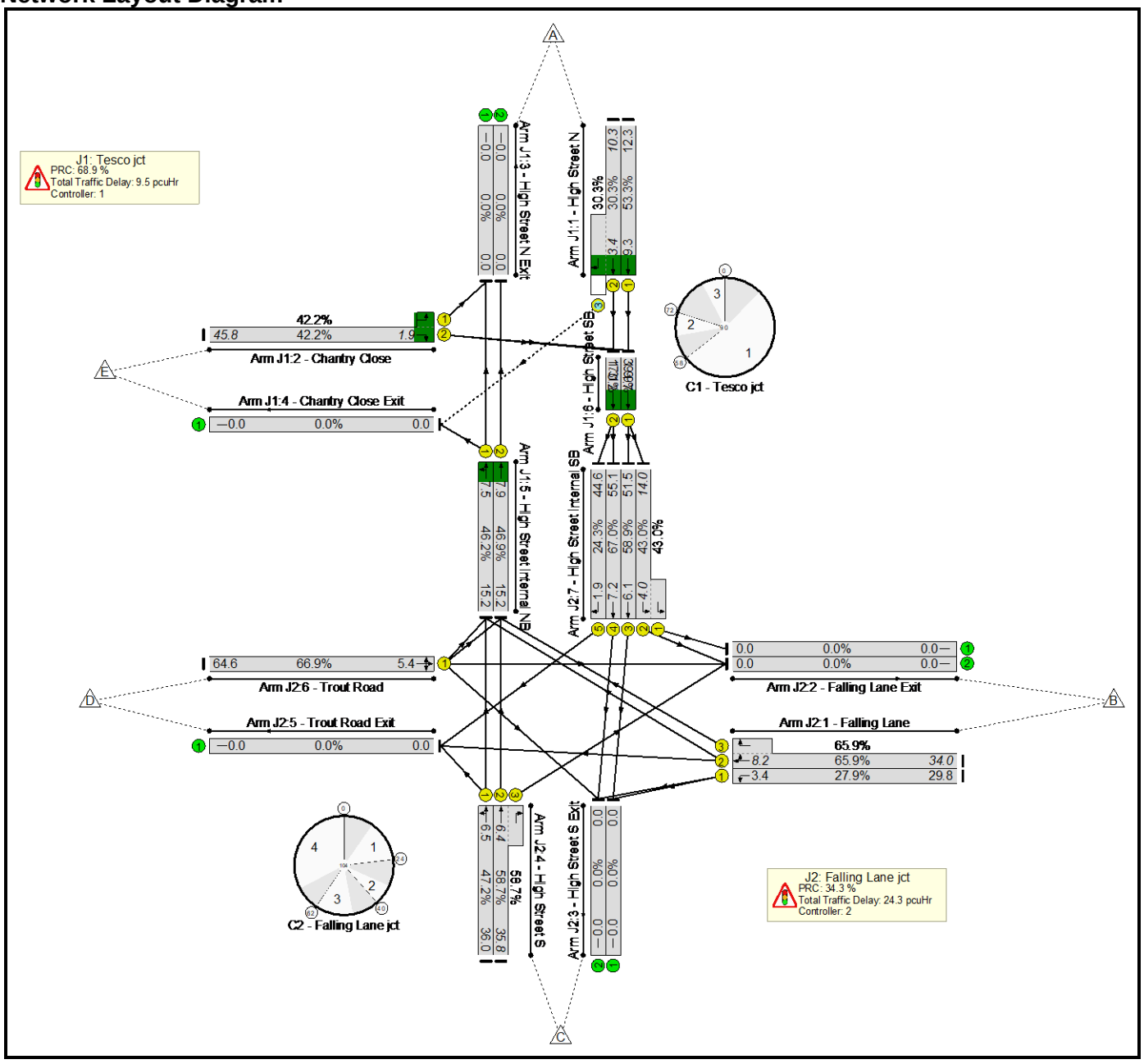

Phase Diagram
C1 - Tesco jct

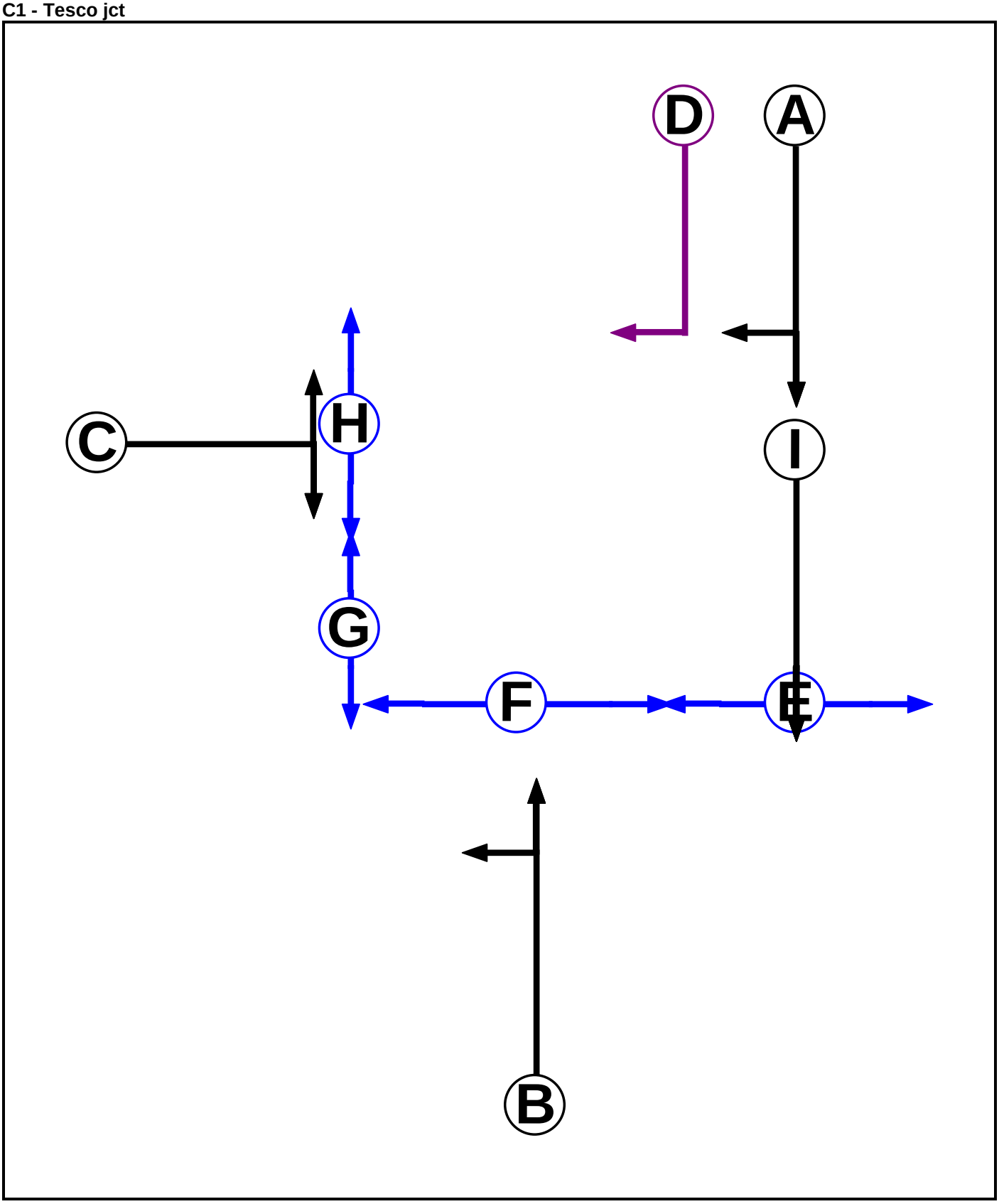

C2 - Falling Lane jct

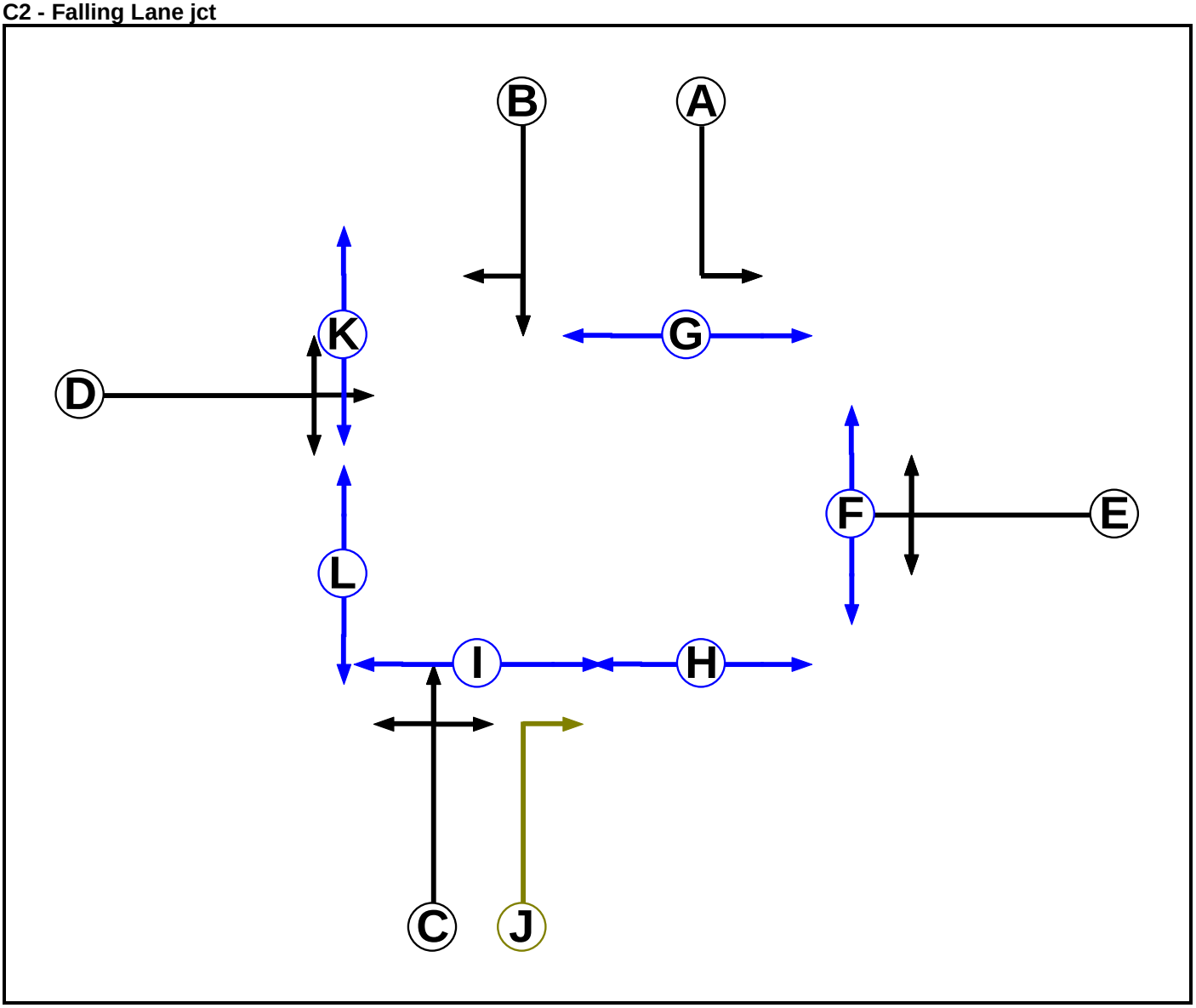

Phase Intergreens Matrix

C1 - Tesco jct

Terminating Phase \ Starting Phase	A	B	C	D	E	F	G	H	I
A		-	5	-	-	-	10	-	-
B	-		6	5	-	7	8	-	-
C	5	5		5	-	-	-	5	-
D	-	6	5		-	-	10	-	-
E	-	-	-	-		-	-	-	10
F	-	11	-	-	-		-	-	-
G	11	11	-	11	-	-		-	-
H	-	-	11	-	-	-	-		-
I	-	-	-	-	5	-	-	-	

C2 - Falling Lane jct

Terminating Phase \ Starting Phase	A	B	C	D	E	F	G	H	I	J	K	L
A		-	-	5	-	-	5	-	-	5	-	-
B	-		-	5	7	-	-	9	-	5	-	10
C	-	-		7	5	-	-	-	6	-	-	9
D	7	6	6		8	8	-	12	-	5	5	-
E	-	6	6	8		5	-	8	-	5	-	9
F	-	-	-	18	18		-	-	-	18	-	-
G	8	-	-	-	-	-		-	-	-	-	-
H	-	9	-	9	9	-	-		-	-	-	-
I	-	-	10	-	-	-	-	-		10	-	-
J	9	8	-	5	6	10	-	-	6		-	-
K	-	-	-	8	-	-	-	-	-	-		-
L	-	8	8	-	8	-	-	-	-	-	-	

Lane Input Data

Junction: J1: Tesco jct

Lane	Lane Type	Phases	Start Disp.	End Disp.	Physical Length (PCU)	Sat Flow Type	Def User Saturation Flow (PCU/Hr)	Lane Width (m)	Gradient	Nearside Lane	Turns	Turning Radius (m)
J1:1/1 (High Street N)	U	A	2	3	60.0	Geom	-	2.90	0.00	Y	Arm J1:6 Ahead	Inf
J1:1/2 (High Street N)	U	A	2	3	60.0	Geom	-	2.90	0.00	Y	Arm J1:6 Ahead	Inf

J1:1/3 (High Street N)	O	A D	2	3	6.1	Geom	-	2.90	0.00	Y	Arm J1:4 Right	8.74
J1:2/1 (Chantry Close)	U	C	2	3	1.7	Geom	-	3.00	0.00	Y	Arm J1:3 Left	5.50
J1:2/2 (Chantry Close)	U	C	2	3	60.0	Geom	-	3.00	0.00	Y	Arm J1:6 Right	11.40
J1:3/1 (High Street N Exit)	U		2	3	60.0	Inf	-	-	-	-	-	-
J1:3/2 (High Street N Exit)	U		2	3	60.0	Inf	-	-	-	-	-	-
J1:4/1 (Chantry Close Exit)	U		2	3	60.0	Inf	-	-	-	-	-	-
J1:5/1 (High Street internal NB)	U	B	2	3	13.6	Geom	-	3.00	0.00	Y	Arm J1:3 Ahead Arm J1:4 Left	Inf 12.70
J1:5/2 (High Street internal NB)	U	B	2	3	13.6	Geom	-	3.00	0.00	Y	Arm J1:3 Ahead	Inf
J1:6/1 (High Street SB)	U	I	2	3	2.1	Geom	-	3.25	0.00	Y	Arm J2:7 Ahead	Inf
J1:6/2 (High Street SB)	U	I	2	3	2.1	Geom	-	3.25	0.00	Y	Arm J2:7 Ahead	Inf

Junction: J2: Falling Lane jct

Lane	Lane Type	Phases	Start Disp.	End Disp.	Physical Length (PCU)	Sat Flow Type	Def User Saturation Flow (PCU/Hr)	Lane Width (m)	Gradient	Nearside Lane	Turns	Turning Radius (m)
J2:1/1 (Falling Lane)	U	E	2	3	60.0	Geom	-	3.20	0.00	Y	Arm J2:3 Left	7.70
J2:1/2 (Falling Lane)	U	E	2	3	12.5	Geom	-	3.20	0.00	Y	Arm J2:5 Ahead	Inf
											Arm J1:5 Right	16.00
J2:1/3 (Falling Lane)	U	E	2	3	4.0	Geom	-	3.18	0.00	Y	Arm J1:5 Right	13.30
J2:2/1 (Falling Lane Exit)	U		2	3	60.0	Inf	-	-	-	-	-	-
J2:2/2 (Falling Lane Exit)	U		2	3	60.0	Inf	-	-	-	-	-	-
J2:3/1 (High Street S Exit)	U		2	3	60.0	Inf	-	-	-	-	-	-
J2:3/2 (High Street S Exit)	U		2	3	60.0	Inf	-	-	-	-	-	-
J2:4/1 (High Street S)	U	C	2	3	60.0	Geom	-	2.50	0.00	Y	Arm J2:5 Left	9.80
											Arm J1:5 Ahead	Inf
J2:4/2 (High Street S)	U	C	2	3	4.0	Geom	-	2.51	0.00	Y	Arm J1:5 Ahead	Inf
J2:4/3 (High Street S)	U	C J	2	3	4.0	Geom	-	2.55	0.00	Y	Arm J2:2 Right	12.20
J2:5/1 (Trout Road Exit)	U		2	3	60.0	Inf	-	-	-	-	-	-
J2:6/1 (Trout Road)	U	D	2	3	60.0	Geom	-	3.70	0.00	Y	Arm J2:2 Ahead	Inf
											Arm J2:3 Right	17.50
											Arm J1:5 Left	8.16
J2:7/1 (High Street internal SB)	U	A	2	3	4.0	Geom	-	3.00	0.00	Y	Arm J2:2 Left	23.50
J2:7/2 (High Street internal SB)	U	A	2	3	12.2	Geom	-	3.00	0.00	Y	Arm J2:2 Left	31.30

J2:7/3 (High Street internal SB)	U	B	2	3	12.2	Geom	-	2.80	0.00	Y	Arm J2:3 Ahead	Inf
J2:7/4 (High Street internal SB)	U	B	2	3	12.2	Geom	-	2.80	0.00	Y	Arm J2:3 Ahead	Inf
J2:7/5 (High Street internal SB)	U	B	2	3	12.2	Geom	-	2.80	0.00	Y	Arm J2:5 Right	7.50

Lane Saturation Flows

Junction: J1: Tesco jct								
Lane	**Lane Width (m)**	**Gradient**	**Nearside Lane**	**Allowed Turns**	**Turning Radius (m)**	**Turning Prop.**	**Sat Flow (PCU/Hr)**	**Flared Sat Flow (PCU/Hr)**
J1:1/1 (High Street N)	2.90	0.00	Y	Arm J1:6 Ahead	Inf	100.0 %	1905	1905
J1:1/2 (High Street N)	2.90	0.00	Y	Arm J1:6 Ahead	Inf	100.0 %	1905	1905
J1:1/3 (High Street N)	2.90	0.00	Y	Arm J1:4 Right	8.74	100.0 %	1626	1626
J1:2/1 (Chantry Close)	3.00	0.00	Y	Arm J1:3 Left	5.50	100.0 %	1505	1505
J1:2/2 (Chantry Close)	3.00	0.00	Y	Arm J1:6 Right	11.40	100.0 %	1692	1692
J1:3/1 (High Street N Exit Lane 1)	Infinite Saturation Flow						Inf	Inf
J1:3/2 (High Street N Exit Lane 2)	Infinite Saturation Flow						Inf	Inf
J1:4/1 (Chantry Close Exit Lane 1)	Infinite Saturation Flow						Inf	Inf
J1:5/1 (High Street internal NB)	3.00	0.00	Y	Arm J1:3 Ahead	Inf	78.3 %	1867	1867
				Arm J1:4 Left	12.70	21.7 %		
J1:5/2 (High Street internal NB)	3.00	0.00	Y	Arm J1:3 Ahead	Inf	100.0 %	1915	1915
J1:6/1 (High Street SB)	3.25	0.00	Y	Arm J2:7 Ahead	Inf	100.0 %	1940	1940
J1:6/2 (High Street SB)	3.25	0.00	Y	Arm J2:7 Ahead	Inf	100.0 %	1940	1940

Junction: J2: Falling Lane jct								
Lane	**Lane Width (m)**	**Gradient**	**Nearside Lane**	**Allowed Turns**	**Turning Radius (m)**	**Turning Prop.**	**Sat Flow (PCU/Hr)**	**Flared Sat Flow (PCU/Hr)**
J2:1/1 (Falling Lane)	3.20	0.00	Y	Arm J2:3 Left	7.70	100.0 %	1620	1620
J2:1/2 (Falling Lane)	3.20	0.00	Y	Arm J2:5 Ahead	Inf	19.1 %	1799	1799
				Arm J1:5 Right	16.00	80.9 %		
J2:1/3 (Falling Lane)	3.18	0.00	Y	Arm J1:5 Right	13.30	100.0 %	1737	1737
J2:2/1 (Falling Lane Exit Lane 1)	Infinite Saturation Flow						Inf	Inf
J2:2/2 (Falling Lane Exit Lane 2)	Infinite Saturation Flow						Inf	Inf
J2:3/1 (High Street S Exit Lane 1)	Infinite Saturation Flow						Inf	Inf
J2:3/2 (High Street S Exit Lane 2)	Infinite Saturation Flow						Inf	Inf
J2:4/1 (High Street S)	2.50	0.00	Y	Arm J2:5 Left	9.80	3.4 %	1855	1855
				Arm J1:5 Ahead	Inf	96.6 %		
J2:4/2 (High Street S)	2.51	0.00	Y	Arm J1:5 Ahead	Inf	100.0 %	1866	1866
J2:4/3 (High Street S)	2.55	0.00	Y	Arm J2:2 Right	12.20	100.0 %	1665	1665
J2:5/1 (Trout Road Exit Lane 1)	Infinite Saturation Flow						Inf	Inf
J2:6/1 (Trout Road)	3.70	0.00	Y	Arm J2:2 Ahead	Inf	41.7 %	1810	1810
				Arm J2:3 Right	17.50	10.4 %		
				Arm J1:5 Left	8.16	47.9 %		
J2:7/1 (High Street internal SB)	3.00	0.00	Y	Arm J2:2 Left	23.50	100.0 %	1800	1800
J2:7/2 (High Street internal SB)	3.00	0.00	Y	Arm J2:2 Left	31.30	100.0 %	1827	1827
J2:7/3 (High Street internal SB)	2.80	0.00	Y	Arm J2:3 Ahead	Inf	100.0 %	1895	1895
J2:7/4 (High Street internal SB)	2.80	0.00	Y	Arm J2:3 Ahead	Inf	100.0 %	1895	1895
J2:7/5 (High Street internal SB)	2.80	0.00	Y	Arm J2:5 Right	7.50	100.0 %	1579	1579

Lane Connector Input Data

Junction: J1: Tesco jct				
Org Lane	**Dest Lane**	**Junction**	**Mean Cruise Time**	**Platoon Dispersion**
J1:1/1	J1:6/1	Internal	3	35
J1:1/2	J1:6/2	Internal	3	35
J1:1/3	J1:4/1	Internal	5	35
J2:1/2	J1:5/1	Entering	12	35
J2:1/3	J1:5/2	Entering	12	35
J1:2/1	J1:3/1	Internal	5	35
J1:2/2	J1:6/1	Internal	4	35
J1:2/2	J1:6/2	Internal	4	35
J2:4/1	J1:5/1	Entering	12	35
J2:4/2	J1:5/2	Entering	12	35
J2:6/1	J1:5/1	Entering	10	35
J2:6/1	J1:5/2	Entering	10	35
J1:5/1	J1:3/1	Internal	5	35
J1:5/1	J1:4/1	Internal	5	35
J1:5/2	J1:3/2	Internal	5	35
J1:6/1	J2:7/2	Leaving	8	35
J1:6/1	J2:7/3	Leaving	8	35
J1:6/2	J2:7/4	Leaving	8	35
J1:6/2	J2:7/5	Leaving	8	35

Junction: J2: Falling Lane jct				
Org Lane	**Dest Lane**	**Junction**	**Mean Cruise Time**	**Platoon Dispersion**
J2:1/1	J2:3/1	Internal	5	35
J2:1/1	J2:3/2	Internal	5	35
J2:1/2	J2:5/1	Internal	5	35
J2:1/2	J1:5/1	Leaving	12	35
J2:1/3	J1:5/2	Leaving	12	35
J2:4/1	J2:5/1	Internal	5	35
J2:4/1	J1:5/1	Leaving	12	35
J2:4/2	J1:5/2	Leaving	12	35
J2:4/3	J2:2/2	Internal	5	35
J2:6/1	J2:2/2	Internal	5	35
J2:6/1	J2:3/2	Internal	5	35
J2:6/1	J1:5/1	Leaving	10	35
J2:6/1	J1:5/2	Leaving	10	35
J2:7/1	J2:2/1	Internal	5	35
J2:7/2	J2:2/2	Internal	5	35
J2:7/3	J2:3/1	Internal	5	35
J2:7/4	J2:3/2	Internal	5	35
J2:7/5	J2:5/1	Internal	5	35
J1:6/1	J2:7/2	Entering	8	35
J1:6/1	J2:7/3	Entering	8	35
J1:6/2	J2:7/4	Entering	8	35
J1:6/2	J2:7/5	Entering	8	35

Stage Sequence Diagram

C1 - Tesco jct

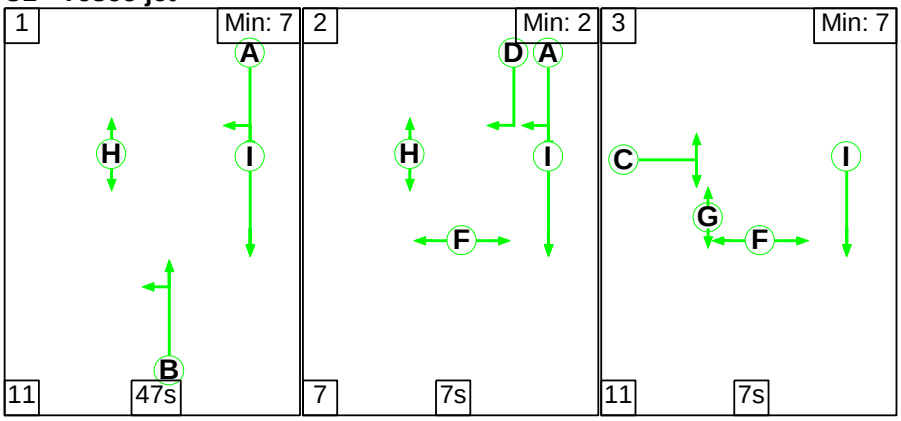

C2 - Falling Lane jct

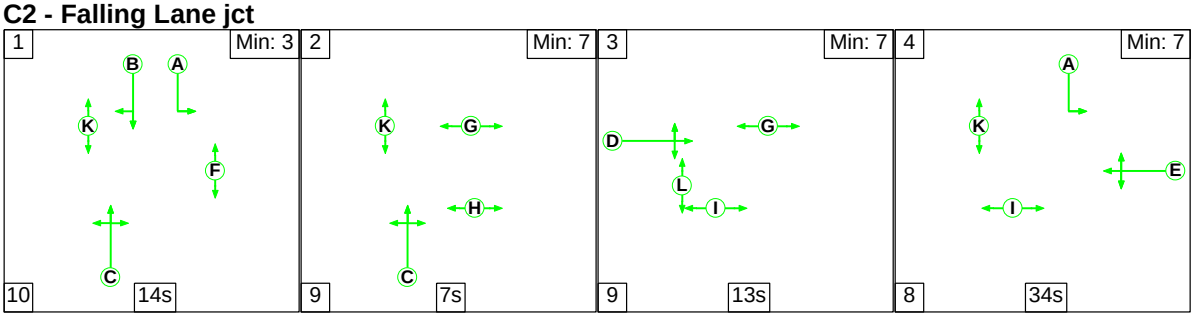

Signal Timings Diagram

C1 - Tesco jct

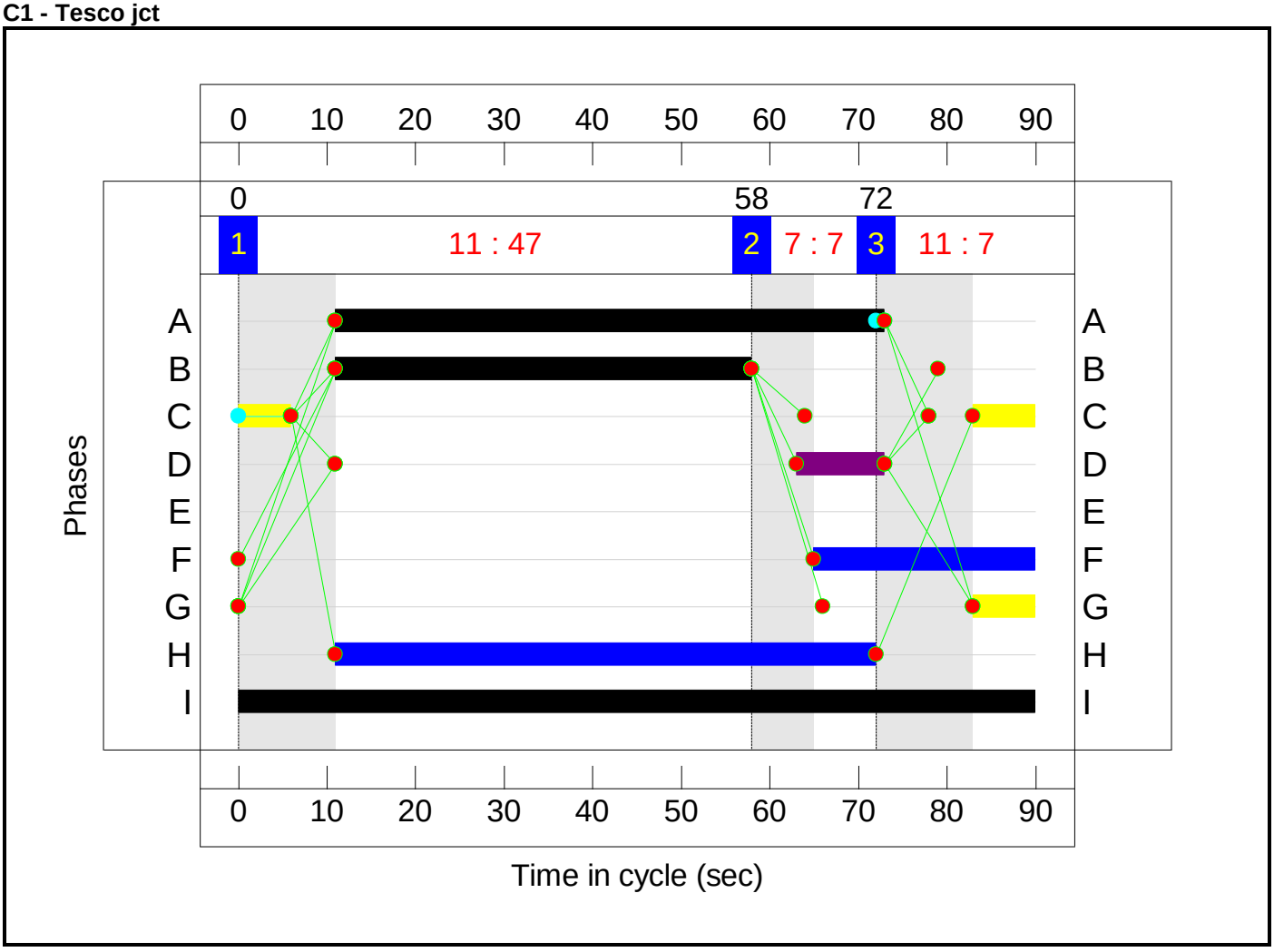

C2 - Falling Lane jct

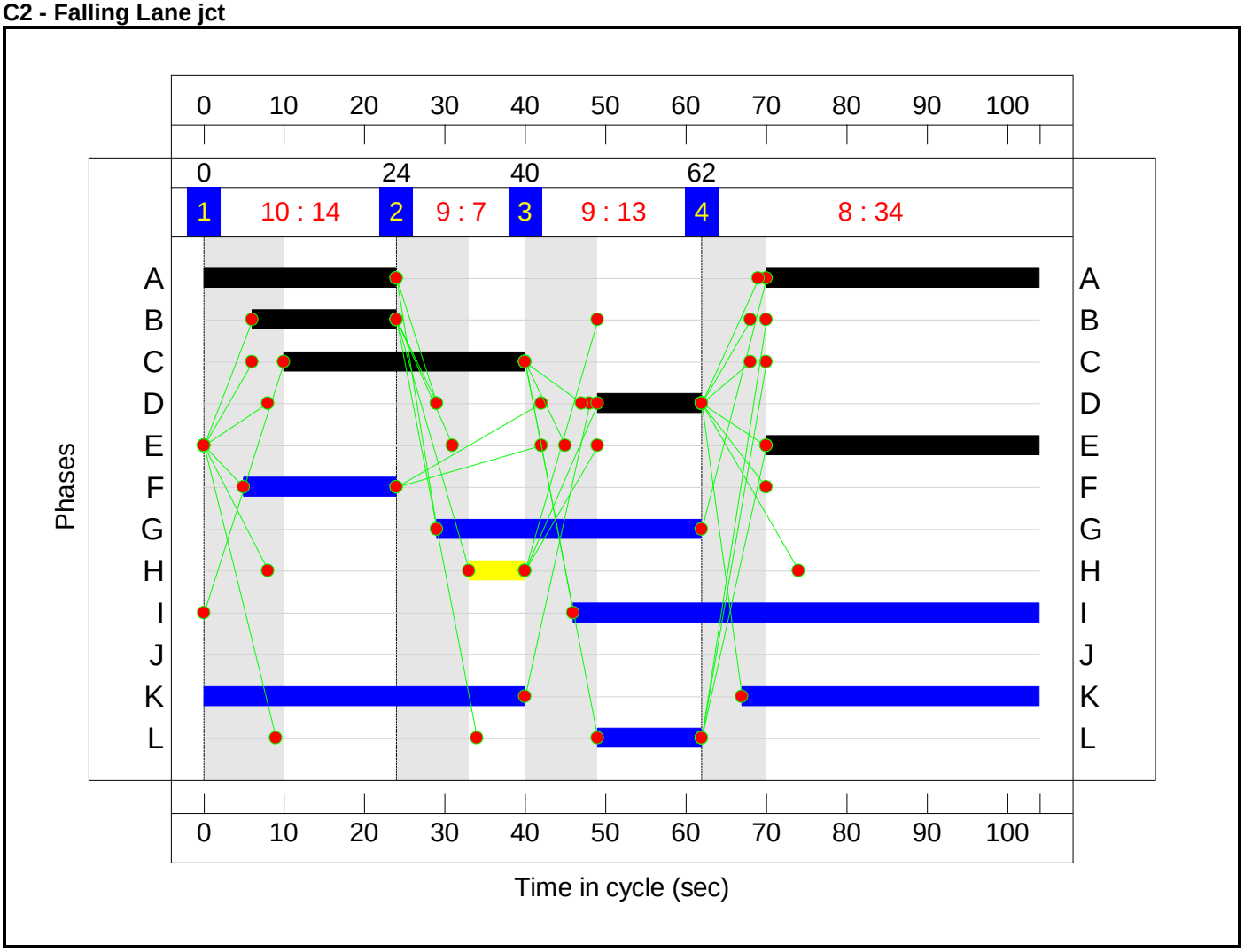

Network Results

Item	Lane Description	Lane Type	Full Phase	Arrow Phase	Num Greens	Total Green (s)	Arrow Green (s)	Demand Flow (pcu)	Sat Flow (pcu/Hr)	Capacity (pcu)	Deg Sat (%)	Turners In Gaps (pcu)	Turners When Unopposed (pcu)	Turners In Intergreen (pcu)	Total Delay (pcuHr)	Av. Delay Per PCU (s/pcu)	Mean Max Queue (pcu)
Network: Chantry Close/High Street	**-**	**-**	**-**		**-**	**-**	**-**	**-**	**-**	**-**	**67.0%**	**71**	**10**	**2**	**33.8**	**-**	**-**
J1: Tesco jct	**-**	**-**	**-**		**-**	**-**	**-**	**-**	**-**	**-**	**53.3%**	**71**	**10**	**2**	**9.5**	**-**	**-**
1/1	High Street N Ahead	U	C1:A		1	62	-	643	1905	1207	53.3%	-	-	-	2.2	12.3	9.3
1/2+1/3	High Street N Right Ahead	U+O	C1:A	C1:D	1	62	10	379	1905:1626	976+274	30.3 : 30.3%	71	10	2	1.1	10.3	3.4
2/2+2/1	Chantry Close Left Right	U	C1:C		1	13	-	123	1692:1505	161+130	42.2 : 42.2%	-	-	-	1.6	45.8	1.9
5/1	High Street internal NB Ahead Left	U	C1:B		1	47	-	479	1867	1037	46.2%	-	-	-	2.0	15.2	7.5
5/2	High Street internal NB Ahead	U	C1:B		1	47	-	499	1915	1064	46.9%	-	-	-	2.1	15.2	7.9
6/1	High Street SB Ahead	U	C1:I		1	90	-	705	1940	1768	39.9%	-	-	-	0.4	1.9	1.7
6/2	High Street SB Ahead	U	C1:I		1	90	-	302	1940	1768	17.1%	-	-	-	0.1	1.3	0.2
J2: Falling Lane jct	**-**	**-**	**-**		**-**	**-**	**-**	**-**	**-**	**-**	**67.0%**	**0**	**0**	**0**	**24.3**	**-**	**-**
1/1	Falling Lane Left	U	C2:E		1	34	-	152	1620	545	27.9%	-	-	-	1.3	29.8	3.4
1/2+1/3	Falling Lane Ahead Right	U	C2:E		1	34	-	481	1799:1737	373+357	65.9 : 65.9%	-	-	-	4.5	34.0	8.2
4/1	High Street S Left Ahead	U	C2:C		1	30	-	261	1855	553	47.2%	-	-	-	2.6	36.0	6.5
4/2+4/3	High Street S Right Ahead	U	C2:C	C2:J	1	30	0	372	1866:1665	364+269	58.7 : 58.7%	-	-	-	3.7	35.8	6.4

6/1	Trout Road Ahead Right Left	U	C2:D		1	13	-	163	1810	244	66.9%	-	-	-	2.9	64.6	5.4
7/2+7/1	High Street internal SB Left	U	C2:A		1	58	-	501	1827:1800	586+579	43.0 : 43.0%	-	-	-	1.9	14.0	4.0
7/3	High Street internal SB Ahead	U	C2:B		1	18	-	204	1895	346	58.9%	-	-	-	2.9	51.5	6.1
7/4	High Street internal SB Ahead	U	C2:B		1	18	-	232	1895	346	67.0%	-	-	-	3.5	55.1	7.2
7/5	High Street internal SB Right	U	C2:B		1	18	-	70	1579	288	24.3%	-	-	-	0.9	44.6	1.9

C1 - Tesco jct	PRC for Signalled Lanes (%):	68.9	Total Delay for Signalled Lanes (pcuHr):	9.46	Cycle Time (s): 90
C2 - Falling Lane jct	PRC for Signalled Lanes (%):	34.3	Total Delay for Signalled Lanes (pcuHr):	24.32	Cycle Time (s): 104
	PRC Over All Lanes (%):	34.3	Total Delay Over All Lanes(pcuHr):	33.79	

Scenario 8: '2025 Growth with Development PM' (FG8: '2025+CD+Development PM', Plan 2: 'Network Control Plan 2')

Network Layout Diagram

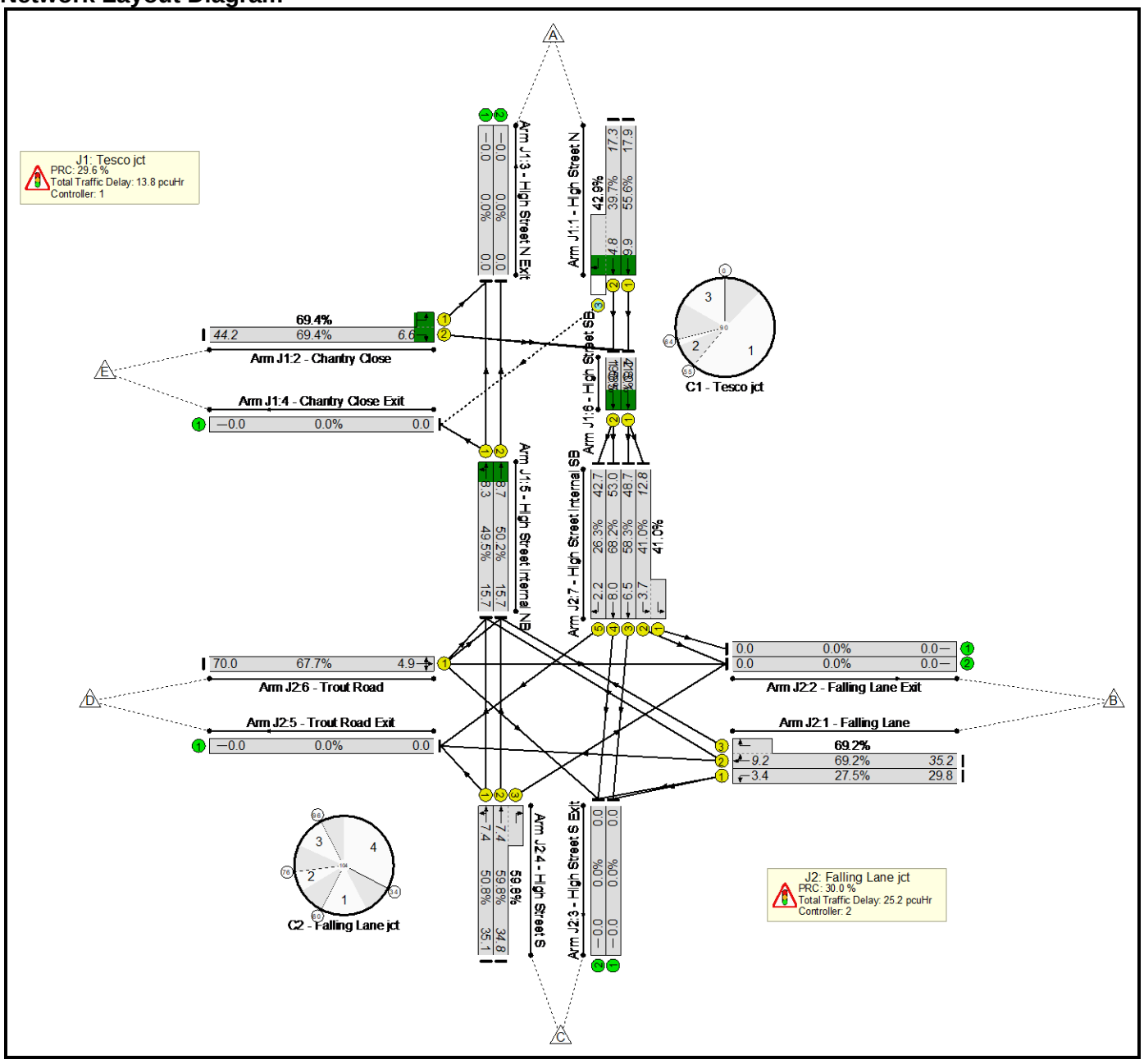

Phase Diagram
C1 - Tesco jct

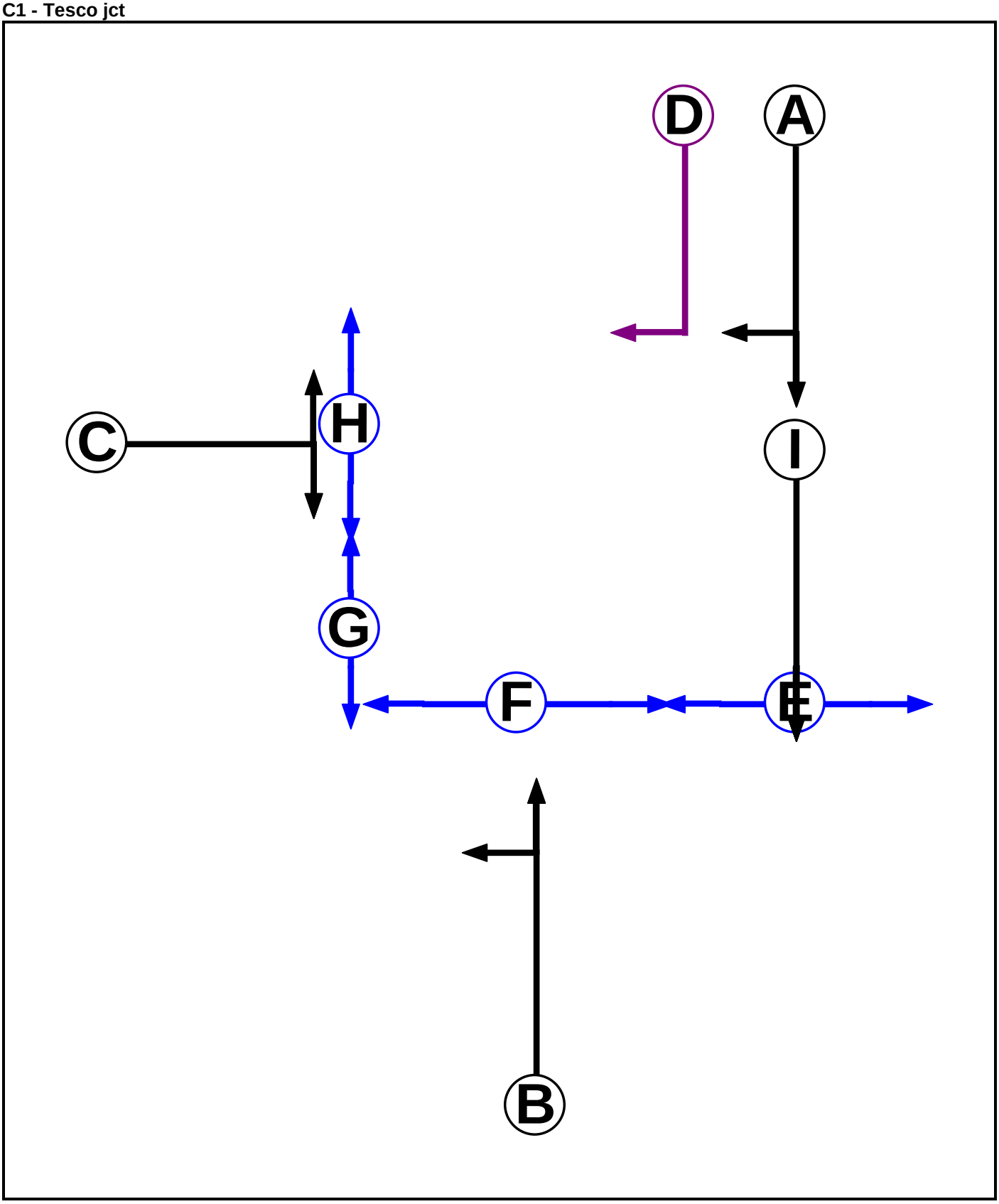

C2 - Falling Lane jct

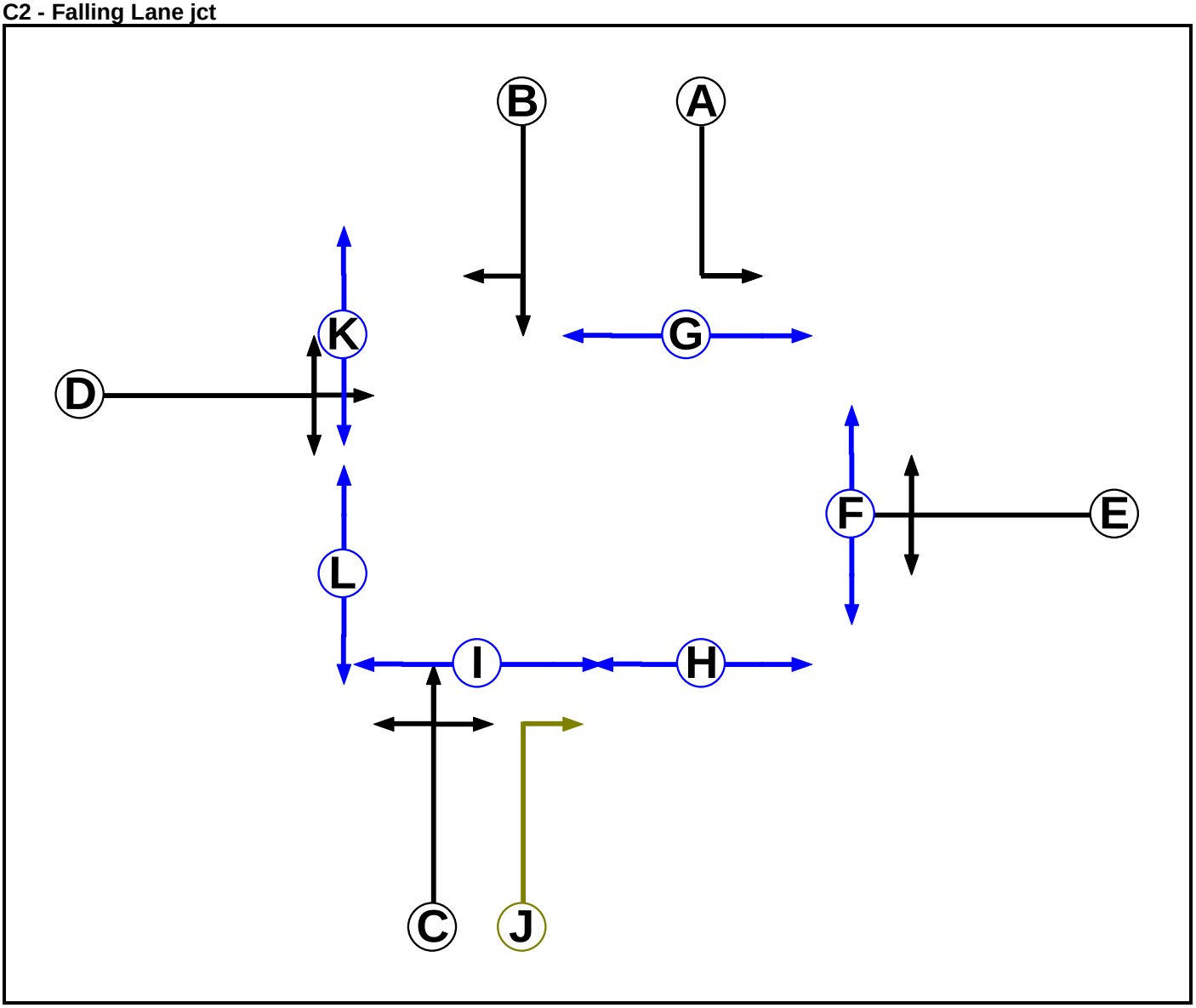

Phase Intergreens Matrix

C1 - Tesco jct

Terminating Phase \ Starting Phase	A	B	C	D	E	F	G	H	I
A		-	5	-	-	-	10	-	-
B	-		6	5	-	7	8	-	-
C	5	5		5	-	-	-	5	-
D	-	6	5		-	-	10	-	-
E	-	-	-	-		-	-	-	10
F	-	11	-	-	-		-	-	-
G	11	11	-	11	-	-		-	-
H	-	-	11	-	-	-	-		-
I	-	-	-	-	5	-	-	-	

C2 - Falling Lane jct

Terminating Phase \ Starting Phase	A	B	C	D	E	F	G	H	I	J	K	L
A		-	-	5	-	-	5	-	-	5	-	-
B	-		-	5	7	-	-	9	-	5	-	10
C	-	-		7	5	-	-	-	6	-	-	9
D	7	6	6		8	8	-	12	-	5	5	-
E	-	6	6	8		5	-	8	-	5	-	9
F	-	-	-	18	18		-	-	-	18	-	-
G	8	-	-	-	-	-		-	-	-	-	-
H	-	9	-	9	9	-	-		-	-	-	-
I	-	-	10	-	-	-	-	-		10	-	-
J	9	8	-	5	6	10	-	-	6		-	-
K	-	-	-	8	-	-	-	-	-	-		-
L	-	8	8	-	8	-	-	-	-	-	-	

Lane Input Data

Junction: J1: Tesco jct

Lane	Lane Type	Phases	Start Disp.	End Disp.	Physical Length (PCU)	Sat Flow Type	Def User Saturation Flow (PCU/Hr)	Lane Width (m)	Gradient	Nearside Lane	Turns	Turning Radius (m)
J1:1/1 (High Street N)	U	A	2	3	60.0	Geom	-	2.90	0.00	Y	Arm J1:6 Ahead	Inf
J1:1/2 (High Street N)	U	A	2	3	60.0	Geom	-	2.90	0.00	Y	Arm J1:6 Ahead	Inf

J1:1/3 (High Street N)	O	A D	2	3	6.1	Geom	-	2.90	0.00	Y	Arm J1:4 Right	8.74
J1:2/1 (Chantry Close)	U	C	2	3	1.7	Geom	-	3.00	0.00	Y	Arm J1:3 Left	5.50
J1:2/2 (Chantry Close)	U	C	2	3	60.0	Geom	-	3.00	0.00	Y	Arm J1:6 Right	11.40
J1:3/1 (High Street N Exit)	U		2	3	60.0	Inf	-	-	-	-	-	-
J1:3/2 (High Street N Exit)	U		2	3	60.0	Inf	-	-	-	-	-	-
J1:4/1 (Chantry Close Exit)	U		2	3	60.0	Inf	-	-	-	-	-	-
J1:5/1 (High Street internal NB)	U	B	2	3	13.6	Geom	-	3.00	0.00	Y	Arm J1:3 Ahead Arm J1:4 Left	Inf 12.70
J1:5/2 (High Street internal NB)	U	B	2	3	13.6	Geom	-	3.00	0.00	Y	Arm J1:3 Ahead	Inf
J1:6/1 (High Street SB)	U	I	2	3	2.1	Geom	-	3.25	0.00	Y	Arm J2:7 Ahead	Inf
J1:6/2 (High Street SB)	U	I	2	3	2.1	Geom	-	3.25	0.00	Y	Arm J2:7 Ahead	Inf

Junction: J2: Falling Lane jct

Lane	Lane Type	Phases	Start Disp.	End Disp.	Physical Length (PCU)	Sat Flow Type	Def User Saturation Flow (PCU/Hr)	Lane Width (m)	Gradient	Nearside Lane	Turns	Turning Radius (m)
J2:1/1 (Falling Lane)	U	E	2	3	60.0	Geom	-	3.20	0.00	Y	Arm J2:3 Left	7.70
J2:1/2 (Falling Lane)	U	E	2	3	12.5	Geom	-	3.20	0.00	Y	Arm J2:5 Ahead	Inf
											Arm J1:5 Right	16.00
J2:1/3 (Falling Lane)	U	E	2	3	4.0	Geom	-	3.18	0.00	Y	Arm J1:5 Right	13.30
J2:2/1 (Falling Lane Exit)	U		2	3	60.0	Inf	-	-	-	-	-	-
J2:2/2 (Falling Lane Exit)	U		2	3	60.0	Inf	-	-	-	-	-	-
J2:3/1 (High Street S Exit)	U		2	3	60.0	Inf	-	-	-	-	-	-
J2:3/2 (High Street S Exit)	U		2	3	60.0	Inf	-	-	-	-	-	-
J2:4/1 (High Street S)	U	C	2	3	60.0	Geom	-	2.50	0.00	Y	Arm J2:5 Left	9.80
											Arm J1:5 Ahead	Inf
J2:4/2 (High Street S)	U	C	2	3	4.0	Geom	-	2.51	0.00	Y	Arm J1:5 Ahead	Inf
J2:4/3 (High Street S)	U	C J	2	3	4.0	Geom	-	2.55	0.00	Y	Arm J2:2 Right	12.20
J2:5/1 (Trout Road Exit)	U		2	3	60.0	Inf	-	-	-	-	-	-
J2:6/1 (Trout Road)	U	D	2	3	60.0	Geom	-	3.70	0.00	Y	Arm J2:2 Ahead	Inf
											Arm J2:3 Right	17.50
											Arm J1:5 Left	8.16
J2:7/1 (High Street internal SB)	U	A	2	3	4.0	Geom	-	3.00	0.00	Y	Arm J2:2 Left	23.50
J2:7/2 (High Street internal SB)	U	A	2	3	12.2	Geom	-	3.00	0.00	Y	Arm J2:2 Left	31.30

J2:7/3 (High Street internal SB)	U	B	2	3	12.2	Geom	-	2.80	0.00	Y	Arm J2:3 Ahead	Inf
J2:7/4 (High Street internal SB)	U	B	2	3	12.2	Geom	-	2.80	0.00	Y	Arm J2:3 Ahead	Inf
J2:7/5 (High Street internal SB)	U	B	2	3	12.2	Geom	-	2.80	0.00	Y	Arm J2:5 Right	7.50

Lane Saturation Flows

Junction: J1: Tesco jct								
Lane	**Lane Width (m)**	**Gradient**	**Nearside Lane**	**Allowed Turns**	**Turning Radius (m)**	**Turning Prop.**	**Sat Flow (PCU/Hr)**	**Flared Sat Flow (PCU/Hr)**
J1:1/1 (High Street N)	2.90	0.00	Y	Arm J1:6 Ahead	Inf	100.0 %	1905	1905
J1:1/2 (High Street N)	2.90	0.00	Y	Arm J1:6 Ahead	Inf	100.0 %	1905	1905
J1:1/3 (High Street N)	2.90	0.00	Y	Arm J1:4 Right	8.74	100.0 %	1626	1626
J1:2/1 (Chantry Close)	3.00	0.00	Y	Arm J1:3 Left	5.50	100.0 %	1505	1505
J1:2/2 (Chantry Close)	3.00	0.00	Y	Arm J1:6 Right	11.40	100.0 %	1692	1692
J1:3/1 (High Street N Exit Lane 1)	Infinite Saturation Flow						Inf	Inf
J1:3/2 (High Street N Exit Lane 2)	Infinite Saturation Flow						Inf	Inf
J1:4/1 (Chantry Close Exit Lane 1)	Infinite Saturation Flow						Inf	Inf
J1:5/1 (High Street internal NB)	3.00	0.00	Y	Arm J1:3 Ahead	Inf	75.2 %	1860	1860
				Arm J1:4 Left	12.70	24.8 %		
J1:5/2 (High Street internal NB)	3.00	0.00	Y	Arm J1:3 Ahead	Inf	100.0 %	1915	1915
J1:6/1 (High Street SB)	3.25	0.00	Y	Arm J2:7 Ahead	Inf	100.0 %	1940	1940
J1:6/2 (High Street SB)	3.25	0.00	Y	Arm J2:7 Ahead	Inf	100.0 %	1940	1940

Junction: J2: Falling Lane jct								
Lane	**Lane Width (m)**	**Gradient**	**Nearside Lane**	**Allowed Turns**	**Turning Radius (m)**	**Turning Prop.**	**Sat Flow (PCU/Hr)**	**Flared Sat Flow (PCU/Hr)**
J2:1/1 (Falling Lane)	3.20	0.00	Y	Arm J2:3 Left	7.70	100.0 %	1620	1620
J2:1/2 (Falling Lane)	3.20	0.00	Y	Arm J2:5 Ahead	Inf	17.1 %	1795	1795
				Arm J1:5 Right	16.00	82.9 %		
J2:1/3 (Falling Lane)	3.18	0.00	Y	Arm J1:5 Right	13.30	100.0 %	1737	1737
J2:2/1 (Falling Lane Exit Lane 1)	Infinite Saturation Flow						Inf	Inf
J2:2/2 (Falling Lane Exit Lane 2)	Infinite Saturation Flow						Inf	Inf
J2:3/1 (High Street S Exit Lane 1)	Infinite Saturation Flow						Inf	Inf
J2:3/2 (High Street S Exit Lane 2)	Infinite Saturation Flow						Inf	Inf
J2:4/1 (High Street S)	2.50	0.00	Y	Arm J2:5 Left	9.80	7.4 %	1844	1844
				Arm J1:5 Ahead	Inf	92.6 %		
J2:4/2 (High Street S)	2.51	0.00	Y	Arm J1:5 Ahead	Inf	100.0 %	1866	1866
J2:4/3 (High Street S)	2.55	0.00	Y	Arm J2:2 Right	12.20	100.0 %	1665	1665
J2:5/1 (Trout Road Exit Lane 1)	Infinite Saturation Flow						Inf	Inf
J2:6/1 (Trout Road)	3.70	0.00	Y	Arm J2:2 Ahead	Inf	45.1 %	1817	1817
				Arm J2:3 Right	17.50	8.5 %		
				Arm J1:5 Left	8.16	46.5 %		
J2:7/1 (High Street internal SB)	3.00	0.00	Y	Arm J2:2 Left	23.50	100.0 %	1800	1800
J2:7/2 (High Street internal SB)	3.00	0.00	Y	Arm J2:2 Left	31.30	100.0 %	1827	1827
J2:7/3 (High Street internal SB)	2.80	0.00	Y	Arm J2:3 Ahead	Inf	100.0 %	1895	1895
J2:7/4 (High Street internal SB)	2.80	0.00	Y	Arm J2:3 Ahead	Inf	100.0 %	1895	1895
J2:7/5 (High Street internal SB)	2.80	0.00	Y	Arm J2:5 Right	7.50	100.0 %	1579	1579

Lane Connector Input Data

Junction: J1: Tesco jct				
Org Lane	**Dest Lane**	**Junction**	**Mean Cruise Time**	**Platoon Dispersion**
J1:1/1	J1:6/1	Internal	3	35
J1:1/2	J1:6/2	Internal	3	35
J1:1/3	J1:4/1	Internal	5	35
J2:1/2	J1:5/1	Entering	12	35
J2:1/3	J1:5/2	Entering	12	35
J1:2/1	J1:3/1	Internal	5	35
J1:2/2	J1:6/1	Internal	4	35
J1:2/2	J1:6/2	Internal	4	35
J2:4/1	J1:5/1	Entering	12	35
J2:4/2	J1:5/2	Entering	12	35
J2:6/1	J1:5/1	Entering	10	35
J2:6/1	J1:5/2	Entering	10	35
J1:5/1	J1:3/1	Internal	5	35
J1:5/1	J1:4/1	Internal	5	35
J1:5/2	J1:3/2	Internal	5	35
J1:6/1	J2:7/2	Leaving	8	35
J1:6/1	J2:7/3	Leaving	8	35
J1:6/2	J2:7/4	Leaving	8	35
J1:6/2	J2:7/5	Leaving	8	35

Junction: J2: Falling Lane jct				
Org Lane	**Dest Lane**	**Junction**	**Mean Cruise Time**	**Platoon Dispersion**
J2:1/1	J2:3/1	Internal	5	35
J2:1/1	J2:3/2	Internal	5	35
J2:1/2	J2:5/1	Internal	5	35
J2:1/2	J1:5/1	Leaving	12	35
J2:1/3	J1:5/2	Leaving	12	35
J2:4/1	J2:5/1	Internal	5	35
J2:4/1	J1:5/1	Leaving	12	35
J2:4/2	J1:5/2	Leaving	12	35
J2:4/3	J2:2/2	Internal	5	35
J2:6/1	J2:2/2	Internal	5	35
J2:6/1	J2:3/2	Internal	5	35
J2:6/1	J1:5/1	Leaving	10	35
J2:6/1	J1:5/2	Leaving	10	35
J2:7/1	J2:2/1	Internal	5	35
J2:7/2	J2:2/2	Internal	5	35
J2:7/3	J2:3/1	Internal	5	35
J2:7/4	J2:3/2	Internal	5	35
J2:7/5	J2:5/1	Internal	5	35
J1:6/1	J2:7/2	Entering	8	35
J1:6/1	J2:7/3	Entering	8	35
J1:6/2	J2:7/4	Entering	8	35
J1:6/2	J2:7/5	Entering	8	35

Stage Sequence Diagram

C1 - Tesco jct

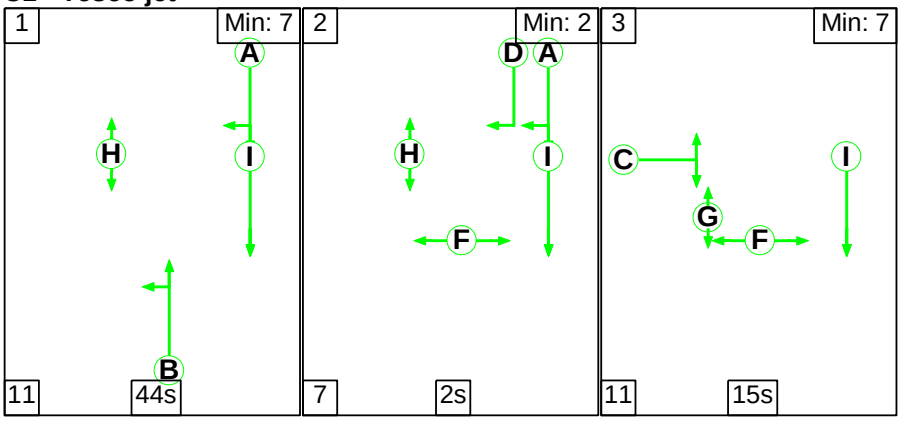

C2 - Falling Lane jct

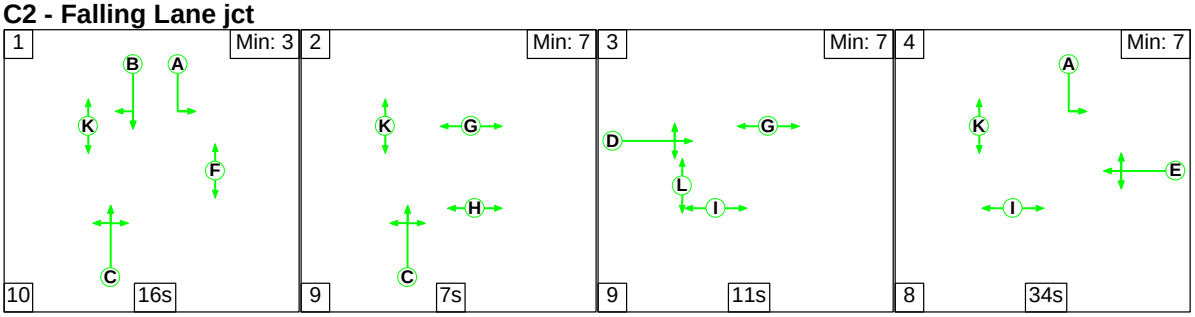

Signal Timings Diagram

C1 - Tesco jct

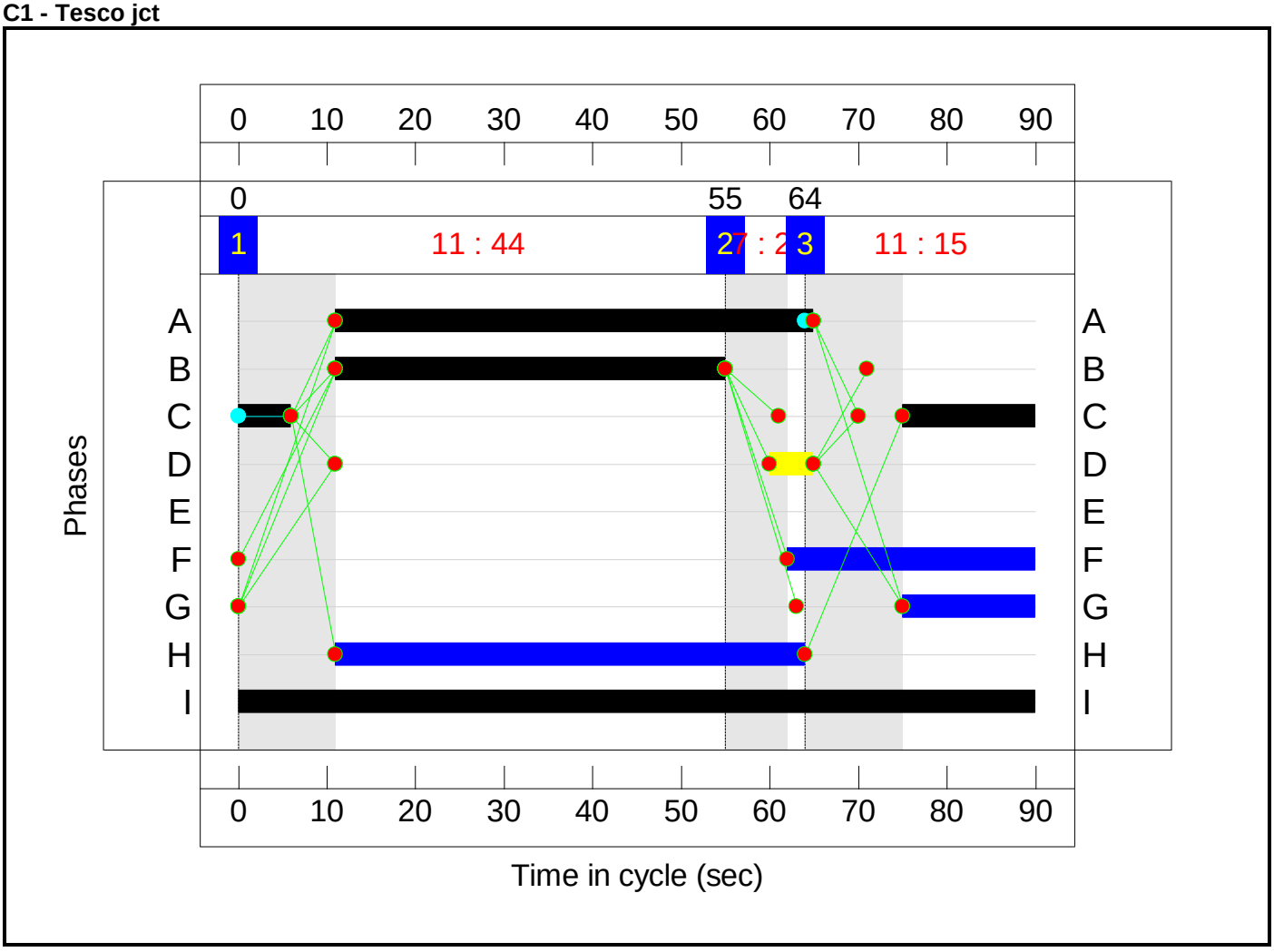

C2 - Falling Lane jct

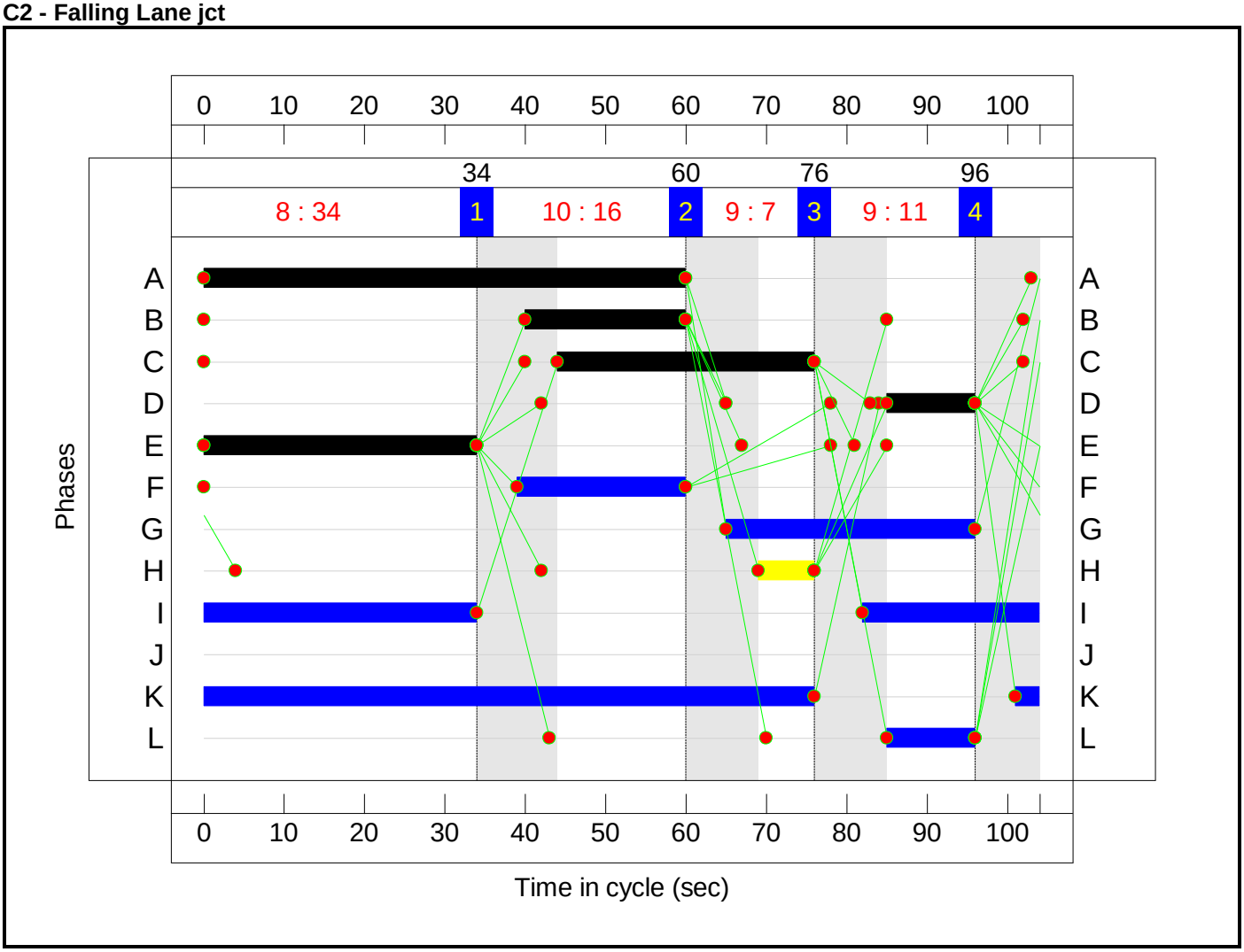

Network Results

Item	Lane Description	Lane Type	Full Phase	Arrow Phase	Num Greens	Total Green (s)	Arrow Green (s)	Demand Flow (pcu)	Sat Flow (pcu/Hr)	Capacity (pcu)	Deg Sat (%)	Turners In Gaps (pcu)	Turners When Unopposed (pcu)	Turners In Intergreen (pcu)	Total Delay (pcuHr)	Av. Delay Per PCU (s/pcu)	Mean Max Queue (pcu)
Network: Chantry Close/High Street	**-**	**-**	**-**		**-**	**-**	**-**	**-**	**-**	**-**	**69.4%**	**100**	**4**	**2**	**39.0**	**-**	**-**
J1: Tesco jct	**-**	**-**	**-**		**-**	**-**	**-**	**-**	**-**	**-**	**69.4%**	**100**	**4**	**2**	**13.8**	**-**	**-**
1/1	High Street N Ahead	U	C1:A		1	54	-	565	1905	1016	55.6%	-	-	-	2.8	17.9	9.9
1/2+1/3	High Street N Right Ahead	U+O	C1:A	C1:D	1	54	5	427	1905:1626	808+247	39.7 : 42.9%	100	4	2	2.1	17.3	4.8
2/2+2/1	Chantry Close Left Right	U	C1:C		1	21	-	297	1692:1505	251+177	69.4 : 69.4%	-	-	-	3.6	44.2	6.6
5/1	High Street internal NB Ahead Left	U	C1:B		1	44	-	512	1860	1033	49.5%	-	-	-	2.2	15.7	8.3
5/2	High Street internal NB Ahead	U	C1:B		1	44	-	534	1915	1064	50.2%	-	-	-	2.3	15.7	8.7
6/1	High Street SB Ahead	U	C1:I		1	90	-	715	1940	1746	41.0%	-	-	-	0.6	2.8	3.1
6/2	High Street SB Ahead	U	C1:I		1	90	-	345	1940	1746	19.8%	-	-	-	0.1	1.5	0.5
J2: Falling Lane jct	**-**	**-**	**-**		**-**	**-**	**-**	**-**	**-**	**-**	**69.2%**	**0**	**0**	**0**	**25.2**	**-**	**-**
1/1	Falling Lane Left	U	C2:E		1	34	-	150	1620	545	27.5%	-	-	-	1.2	29.8	3.4
1/2+1/3	Falling Lane Ahead Right	U	C2:E		1	34	-	505	1795:1737	373+357	69.2 : 69.2%	-	-	-	4.9	35.2	9.2
4/1	High Street S Left Ahead	U	C2:C		1	32	-	297	1844	585	50.8%	-	-	-	2.9	35.1	7.4
4/2+4/3	High Street S Right Ahead	U	C2:C	C2:J	1	32	0	389	1866:1665	408+242	59.8 : 59.8%	-	-	-	3.8	34.8	7.4

6/1	Trout Road Ahead Right Left	U	C2:D		1	11	-	142	1817	210	67.7%	-	-	-	2.8	70.0	4.9
7/2+7/1	High Street internal SB Left	U	C2:A		1	60	-	492	1827:1800	604+595	41.0 : 41.0%	-	-	-	1.8	12.8	3.7
7/3	High Street internal SB Ahead	U	C2:B		1	20	-	223	1895	383	58.3%	-	-	-	3.0	48.7	6.5
7/4	High Street internal SB Ahead	U	C2:B		1	20	-	261	1895	383	68.2%	-	-	-	3.8	53.0	8.0
7/5	High Street internal SB Right	U	C2:B		1	20	-	84	1579	319	26.3%	-	-	-	1.0	42.7	2.2

C1 - Tesco jct	PRC for Signalled Lanes (%):	29.6	Total Delay for Signalled Lanes (pcuHr):	13.78	Cycle Time (s): 90
C2 - Falling Lane jct	PRC for Signalled Lanes (%):	30.0	Total Delay for Signalled Lanes (pcuHr):	25.20	Cycle Time (s): 104
	PRC Over All Lanes (%):	29.6	Total Delay Over All Lanes(pcuHr):	38.98	

Scenario 9: '2025 Growth with Development Sat' (FG9: '2025+CD+Development Sat', Plan 2: 'Network Control Plan 2')

Network Layout Diagram

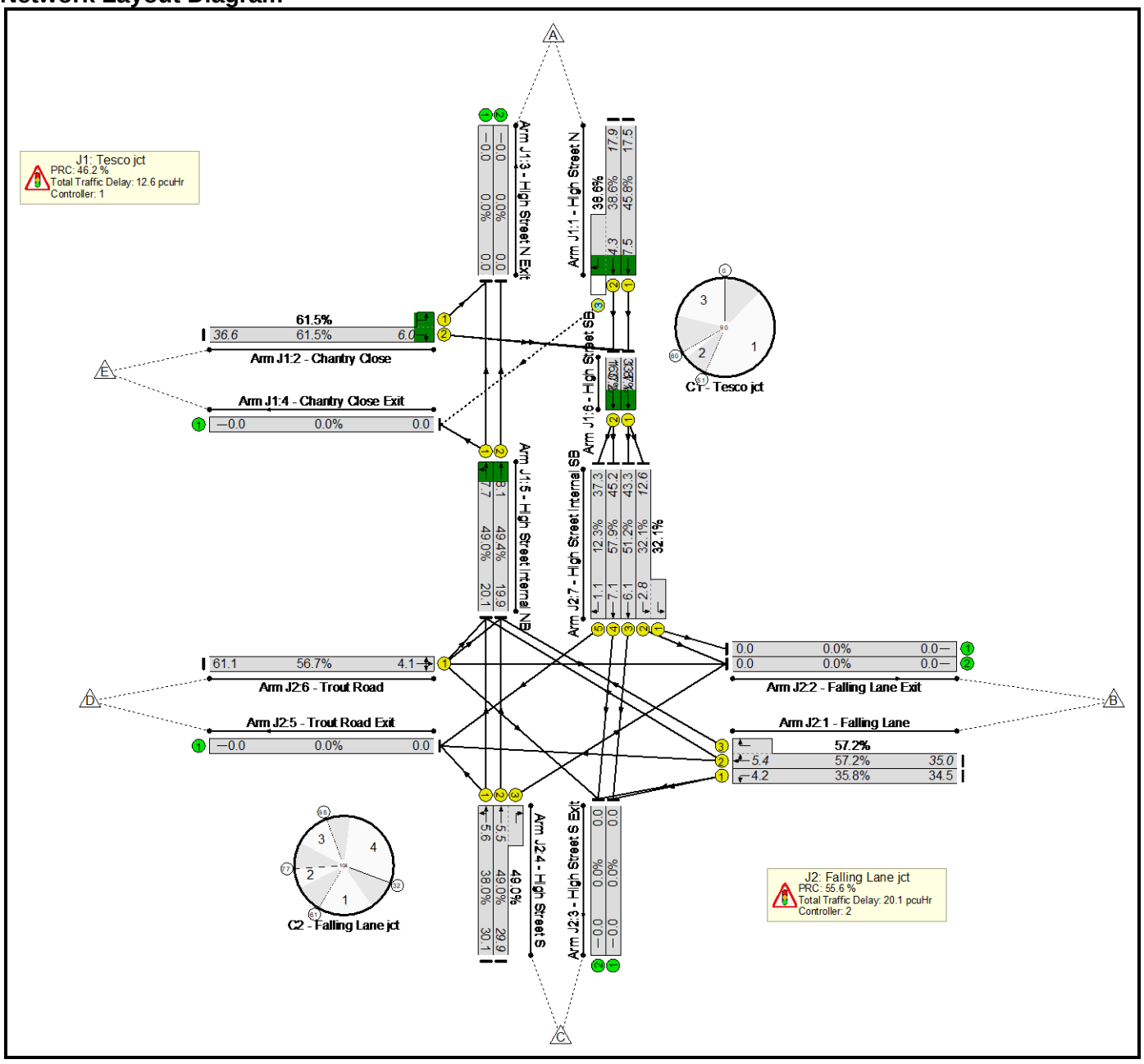

Phase Diagram
C1 - Tesco jct

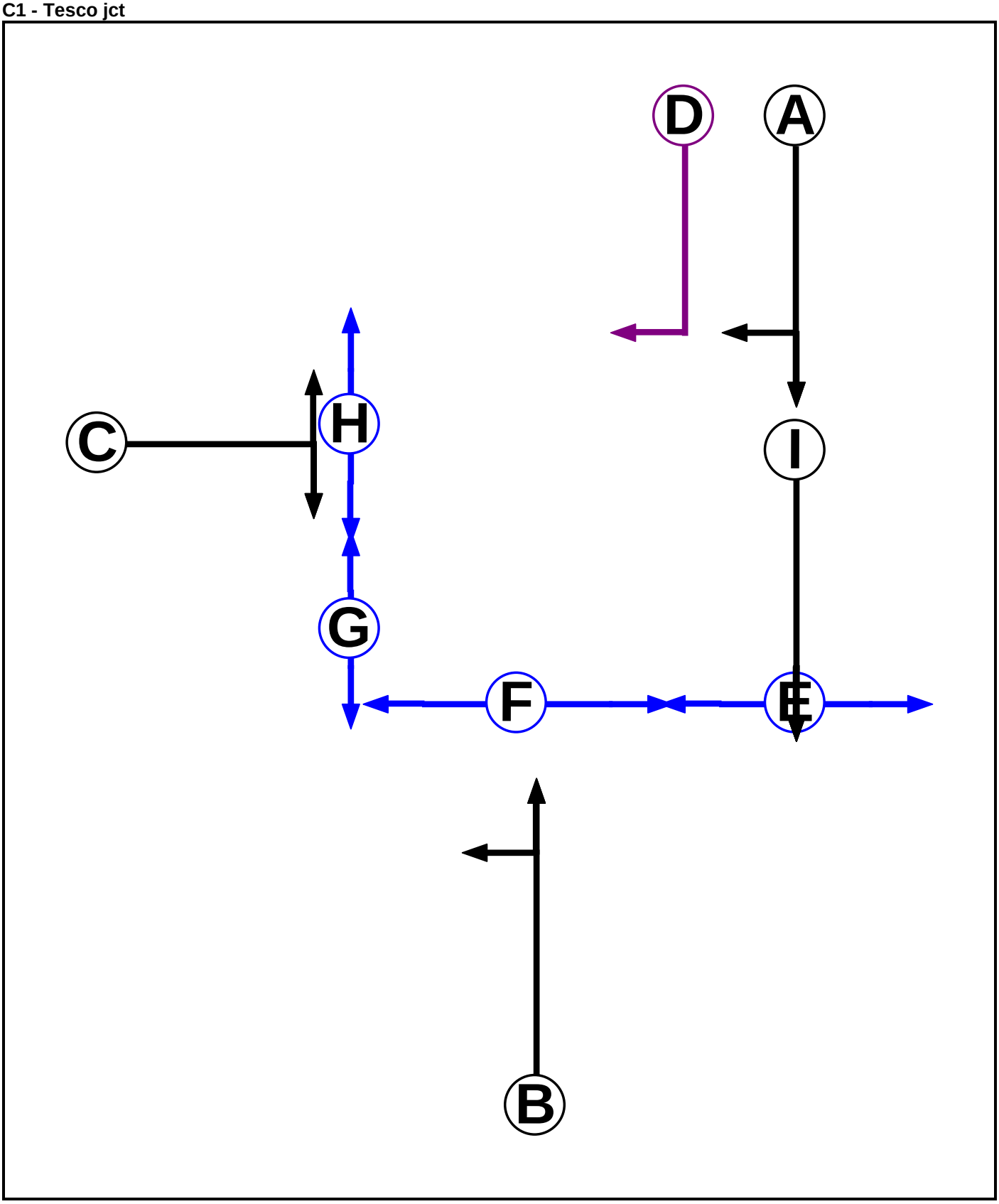

C2 - Falling Lane jct

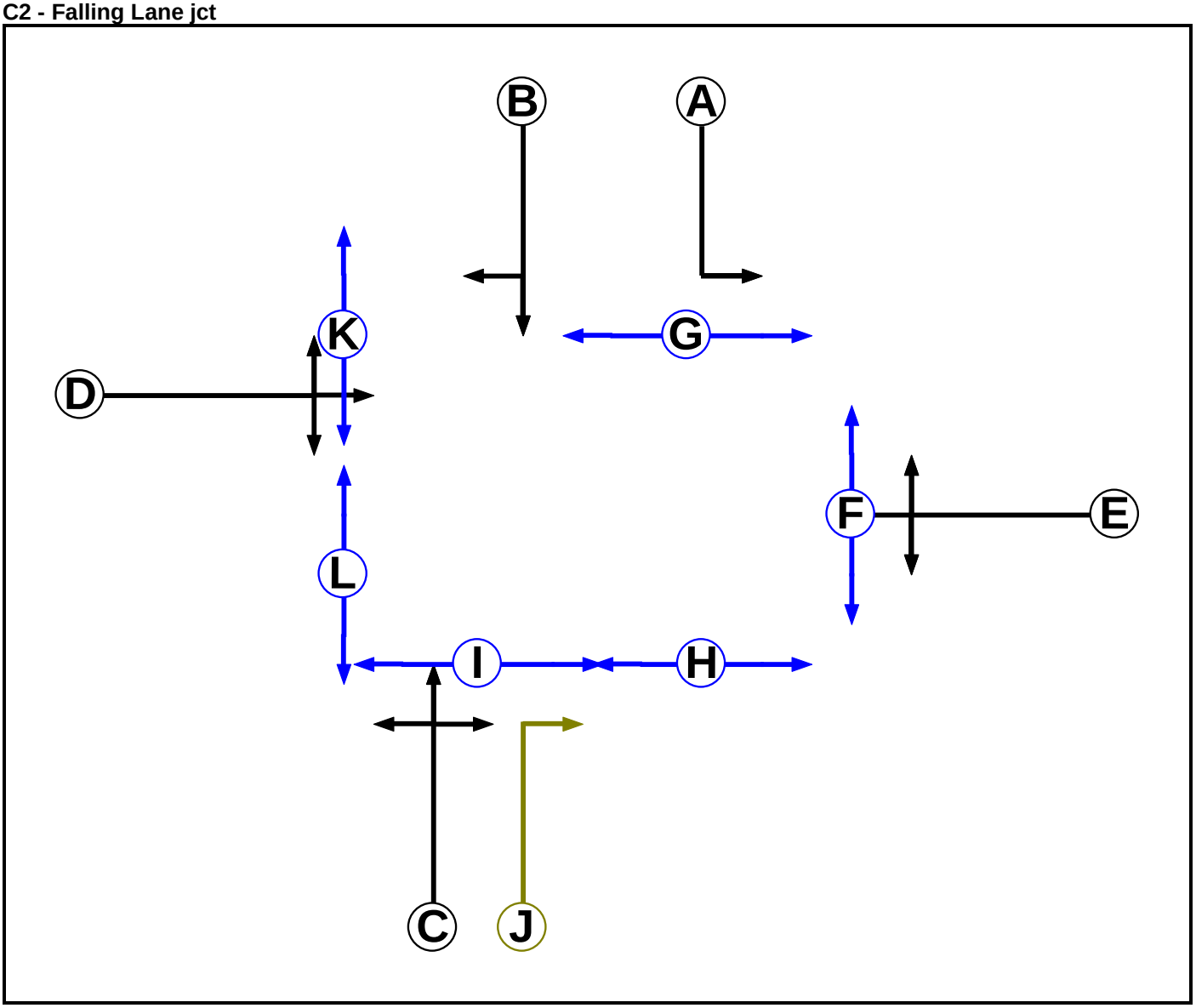

Phase Intergreens Matrix

C1 - Tesco jct

Terminating Phase \ Starting Phase	A	B	C	D	E	F	G	H	I
A		-	5	-	-	-	10	-	-
B	-		6	5	-	7	8	-	-
C	5	5		5	-	-	-	5	-
D	-	6	5		-	-	10	-	-
E	-	-	-	-		-	-	-	10
F	-	11	-	-	-		-	-	-
G	11	11	-	11	-	-		-	-
H	-	-	11	-	-	-	-		-
I	-	-	-	-	5	-	-	-	

C2 - Falling Lane jct

Terminating Phase \ Starting Phase	A	B	C	D	E	F	G	H	I	J	K	L
A		-	-	5	-	-	5	-	-	5	-	-
B	-		-	5	7	-	-	9	-	5	-	10
C	-	-		7	5	-	-	-	6	-	-	9
D	7	6	6		8	8	-	12	-	5	5	-
E	-	6	6	8		5	-	8	-	5	-	9
F	-	-	-	18	18		-	-	-	18	-	-
G	8	-	-	-	-	-		-	-	-	-	-
H	-	9	-	9	9	-	-		-	-	-	-
I	-	-	10	-	-	-	-	-		10	-	-
J	9	8	-	5	6	10	-	-	6		-	-
K	-	-	-	8	-	-	-	-	-	-		-
L	-	8	8	-	8	-	-	-	-	-	-	

Lane Input Data

Junction: J1: Tesco jct

Lane	Lane Type	Phases	Start Disp.	End Disp.	Physical Length (PCU)	Sat Flow Type	Def User Saturation Flow (PCU/Hr)	Lane Width (m)	Gradient	Nearside Lane	Turns	Turning Radius (m)
J1:1/1 (High Street N)	U	A	2	3	60.0	Geom	-	2.90	0.00	Y	Arm J1:6 Ahead	Inf
J1:1/2 (High Street N)	U	A	2	3	60.0	Geom	-	2.90	0.00	Y	Arm J1:6 Ahead	Inf

J1:1/3 (High Street N)	O	A D	2	3	6.1	Geom	-	2.90	0.00	Y	Arm J1:4 Right	8.74
J1:2/1 (Chantry Close)	U	C	2	3	1.7	Geom	-	3.00	0.00	Y	Arm J1:3 Left	5.50
J1:2/2 (Chantry Close)	U	C	2	3	60.0	Geom	-	3.00	0.00	Y	Arm J1:6 Right	11.40
J1:3/1 (High Street N Exit)	U		2	3	60.0	Inf	-	-	-	-	-	-
J1:3/2 (High Street N Exit)	U		2	3	60.0	Inf	-	-	-	-	-	-
J1:4/1 (Chantry Close Exit)	U		2	3	60.0	Inf	-	-	-	-	-	-
J1:5/1 (High Street internal NB)	U	B	2	3	13.6	Geom	-	3.00	0.00	Y	Arm J1:3 Ahead Arm J1:4 Left	Inf 12.70
J1:5/2 (High Street internal NB)	U	B	2	3	13.6	Geom	-	3.00	0.00	Y	Arm J1:3 Ahead	Inf
J1:6/1 (High Street SB)	U	I	2	3	2.1	Geom	-	3.25	0.00	Y	Arm J2:7 Ahead	Inf
J1:6/2 (High Street SB)	U	I	2	3	2.1	Geom	-	3.25	0.00	Y	Arm J2:7 Ahead	Inf

Junction: J2: Falling Lane jct

Lane	Lane Type	Phases	Start Disp.	End Disp.	Physical Length (PCU)	Sat Flow Type	Def User Saturation Flow (PCU/Hr)	Lane Width (m)	Gradient	Nearside Lane	Turns	Turning Radius (m)
J2:1/1 (Falling Lane)	U	E	2	3	60.0	Geom	-	3.20	0.00	Y	Arm J2:3 Left	7.70
J2:1/2 (Falling Lane)	U	E	2	3	12.5	Geom	-	3.20	0.00	Y	Arm J2:5 Ahead	Inf
											Arm J1:5 Right	16.00
J2:1/3 (Falling Lane)	U	E	2	3	4.0	Geom	-	3.18	0.00	Y	Arm J1:5 Right	13.30
J2:2/1 (Falling Lane Exit)	U		2	3	60.0	Inf	-	-	-	-	-	-
J2:2/2 (Falling Lane Exit)	U		2	3	60.0	Inf	-	-	-	-	-	-
J2:3/1 (High Street S Exit)	U		2	3	60.0	Inf	-	-	-	-	-	-
J2:3/2 (High Street S Exit)	U		2	3	60.0	Inf	-	-	-	-	-	-
J2:4/1 (High Street S)	U	C	2	3	60.0	Geom	-	2.50	0.00	Y	Arm J2:5 Left	9.80
											Arm J1:5 Ahead	Inf
J2:4/2 (High Street S)	U	C	2	3	4.0	Geom	-	2.51	0.00	Y	Arm J1:5 Ahead	Inf
J2:4/3 (High Street S)	U	C J	2	3	4.0	Geom	-	2.55	0.00	Y	Arm J2:2 Right	12.20
J2:5/1 (Trout Road Exit)	U		2	3	60.0	Inf	-	-	-	-	-	-
J2:6/1 (Trout Road)	U	D	2	3	60.0	Geom	-	3.70	0.00	Y	Arm J2:2 Ahead	Inf
											Arm J2:3 Right	17.50
											Arm J1:5 Left	8.16
J2:7/1 (High Street internal SB)	U	A	2	3	4.0	Geom	-	3.00	0.00	Y	Arm J2:2 Left	23.50
J2:7/2 (High Street internal SB)	U	A	2	3	12.2	Geom	-	3.00	0.00	Y	Arm J2:2 Left	31.30

J2:7/3 (High Street internal SB)	U	B	2	3	12.2	Geom	-	2.80	0.00	Y	Arm J2:3 Ahead	Inf
J2:7/4 (High Street internal SB)	U	B	2	3	12.2	Geom	-	2.80	0.00	Y	Arm J2:3 Ahead	Inf
J2:7/5 (High Street internal SB)	U	B	2	3	12.2	Geom	-	2.80	0.00	Y	Arm J2:5 Right	7.50

Lane Saturation Flows

Junction: J1: Tesco jct								
Lane	**Lane Width (m)**	**Gradient**	**Nearside Lane**	**Allowed Turns**	**Turning Radius (m)**	**Turning Prop.**	**Sat Flow (PCU/Hr)**	**Flared Sat Flow (PCU/Hr)**
J1:1/1 (High Street N)	2.90	0.00	Y	Arm J1:6 Ahead	Inf	100.0 %	1905	1905
J1:1/2 (High Street N)	2.90	0.00	Y	Arm J1:6 Ahead	Inf	100.0 %	1905	1905
J1:1/3 (High Street N)	2.90	0.00	Y	Arm J1:4 Right	8.74	100.0 %	1626	1626
J1:2/1 (Chantry Close)	3.00	0.00	Y	Arm J1:3 Left	5.50	100.0 %	1505	1505
J1:2/2 (Chantry Close)	3.00	0.00	Y	Arm J1:6 Right	11.40	100.0 %	1692	1692
J1:3/1 (High Street N Exit Lane 1)	Infinite Saturation Flow						Inf	Inf
J1:3/2 (High Street N Exit Lane 2)	Infinite Saturation Flow						Inf	Inf
J1:4/1 (Chantry Close Exit Lane 1)	Infinite Saturation Flow						Inf	Inf
J1:5/1 (High Street internal NB)	3.00	0.00	Y	Arm J1:3 Ahead	Inf	54.9 %	1818	1818
				Arm J1:4 Left	12.70	45.1 %		
J1:5/2 (High Street internal NB)	3.00	0.00	Y	Arm J1:3 Ahead	Inf	100.0 %	1915	1915
J1:6/1 (High Street SB)	3.25	0.00	Y	Arm J2:7 Ahead	Inf	100.0 %	1940	1940
J1:6/2 (High Street SB)	3.25	0.00	Y	Arm J2:7 Ahead	Inf	100.0 %	1940	1940

Junction: J2: Falling Lane jct								
Lane	**Lane Width (m)**	**Gradient**	**Nearside Lane**	**Allowed Turns**	**Turning Radius (m)**	**Turning Prop.**	**Sat Flow (PCU/Hr)**	**Flared Sat Flow (PCU/Hr)**
J2:1/1 (Falling Lane)	3.20	0.00	Y	Arm J2:3 Left	7.70	100.0 %	1620	1620
J2:1/2 (Falling Lane)	3.20	0.00	Y	Arm J2:5 Ahead	Inf	12.6 %	1789	1789
				Arm J1:5 Right	16.00	87.4 %		
J2:1/3 (Falling Lane)	3.18	0.00	Y	Arm J1:5 Right	13.30	100.0 %	1737	1737
J2:2/1 (Falling Lane Exit Lane 1)	Infinite Saturation Flow						Inf	Inf
J2:2/2 (Falling Lane Exit Lane 2)	Infinite Saturation Flow						Inf	Inf
J2:3/1 (High Street S Exit Lane 1)	Infinite Saturation Flow						Inf	Inf
J2:3/2 (High Street S Exit Lane 2)	Infinite Saturation Flow						Inf	Inf
J2:4/1 (High Street S)	2.50	0.00	Y	Arm J2:5 Left	9.80	2.9 %	1857	1857
				Arm J1:5 Ahead	Inf	97.1 %		
J2:4/2 (High Street S)	2.51	0.00	Y	Arm J1:5 Ahead	Inf	100.0 %	1866	1866
J2:4/3 (High Street S)	2.55	0.00	Y	Arm J2:2 Right	12.20	100.0 %	1665	1665
J2:5/1 (Trout Road Exit Lane 1)	Infinite Saturation Flow						Inf	Inf
J2:6/1 (Trout Road)	3.70	0.00	Y	Arm J2:2 Ahead	Inf	37.0 %	1793	1793
				Arm J2:3 Right	17.50	8.7 %		
				Arm J1:5 Left	8.16	54.3 %		
J2:7/1 (High Street internal SB)	3.00	0.00	Y	Arm J2:2 Left	23.50	100.0 %	1800	1800
J2:7/2 (High Street internal SB)	3.00	0.00	Y	Arm J2:2 Left	31.30	100.0 %	1827	1827
J2:7/3 (High Street internal SB)	2.80	0.00	Y	Arm J2:3 Ahead	Inf	100.0 %	1895	1895
J2:7/4 (High Street internal SB)	2.80	0.00	Y	Arm J2:3 Ahead	Inf	100.0 %	1895	1895
J2:7/5 (High Street internal SB)	2.80	0.00	Y	Arm J2:5 Right	7.50	100.0 %	1579	1579

Lane Connector Input Data

Junction: J1: Tesco jct				
Org Lane	**Dest Lane**	**Junction**	**Mean Cruise Time**	**Platoon Dispersion**
J1:1/1	J1:6/1	Internal	3	35
J1:1/2	J1:6/2	Internal	3	35
J1:1/3	J1:4/1	Internal	5	35
J2:1/2	J1:5/1	Entering	12	35
J2:1/3	J1:5/2	Entering	12	35
J1:2/1	J1:3/1	Internal	5	35
J1:2/2	J1:6/1	Internal	4	35
J1:2/2	J1:6/2	Internal	4	35
J2:4/1	J1:5/1	Entering	12	35
J2:4/2	J1:5/2	Entering	12	35
J2:6/1	J1:5/1	Entering	10	35
J2:6/1	J1:5/2	Entering	10	35
J1:5/1	J1:3/1	Internal	5	35
J1:5/1	J1:4/1	Internal	5	35
J1:5/2	J1:3/2	Internal	5	35
J1:6/1	J2:7/2	Leaving	8	35
J1:6/1	J2:7/3	Leaving	8	35
J1:6/2	J2:7/4	Leaving	8	35
J1:6/2	J2:7/5	Leaving	8	35

Junction: J2: Falling Lane jct				
Org Lane	Dest Lane	Junction	Mean Cruise Time	Platoon Dispersion
J2:1/1	J2:3/1	Internal	5	35
J2:1/1	J2:3/2	Internal	5	35
J2:1/2	J2:5/1	Internal	5	35
J2:1/2	J1:5/1	Leaving	12	35
J2:1/3	J1:5/2	Leaving	12	35
J2:4/1	J2:5/1	Internal	5	35
J2:4/1	J1:5/1	Leaving	12	35
J2:4/2	J1:5/2	Leaving	12	35
J2:4/3	J2:2/2	Internal	5	35
J2:6/1	J2:2/2	Internal	5	35
J2:6/1	J2:3/2	Internal	5	35
J2:6/1	J1:5/1	Leaving	10	35
J2:6/1	J1:5/2	Leaving	10	35
J2:7/1	J2:2/1	Internal	5	35
J2:7/2	J2:2/2	Internal	5	35
J2:7/3	J2:3/1	Internal	5	35
J2:7/4	J2:3/2	Internal	5	35
J2:7/5	J2:5/1	Internal	5	35
J1:6/1	J2:7/2	Entering	8	35
J1:6/1	J2:7/3	Entering	8	35
J1:6/2	J2:7/4	Entering	8	35
J1:6/2	J2:7/5	Entering	8	35

Stage Sequence Diagram

C1 - Tesco jct

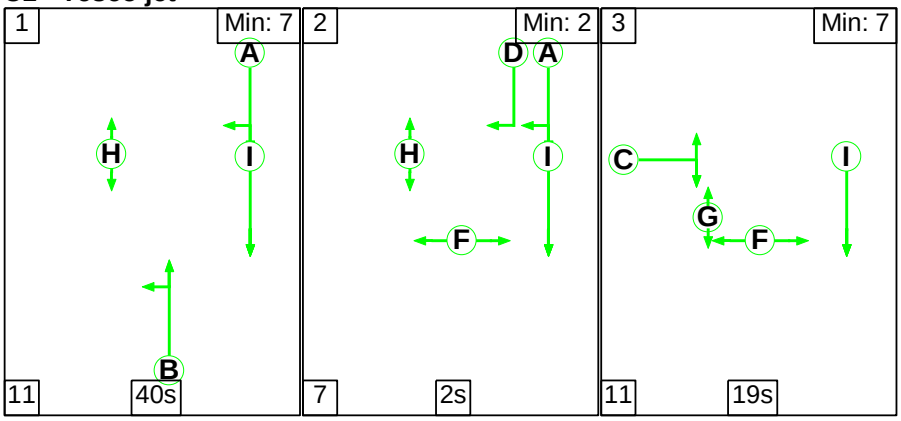

C2 - Falling Lane jct

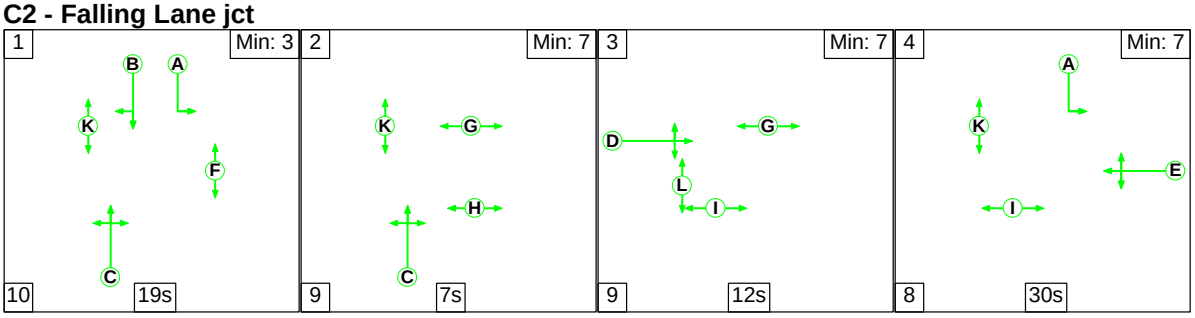

Signal Timings Diagram

C1 - Tesco jct

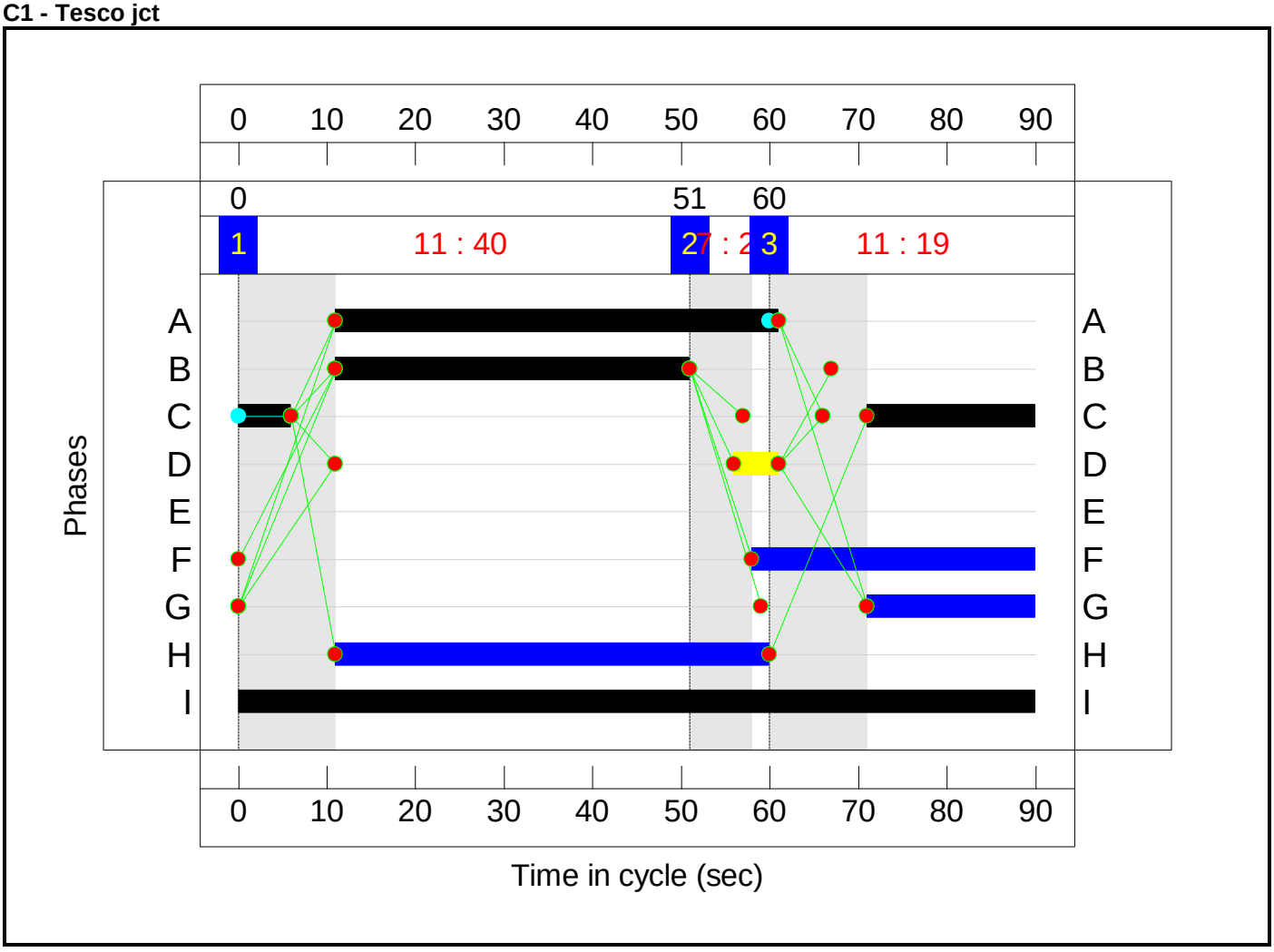

C2 - Falling Lane jct

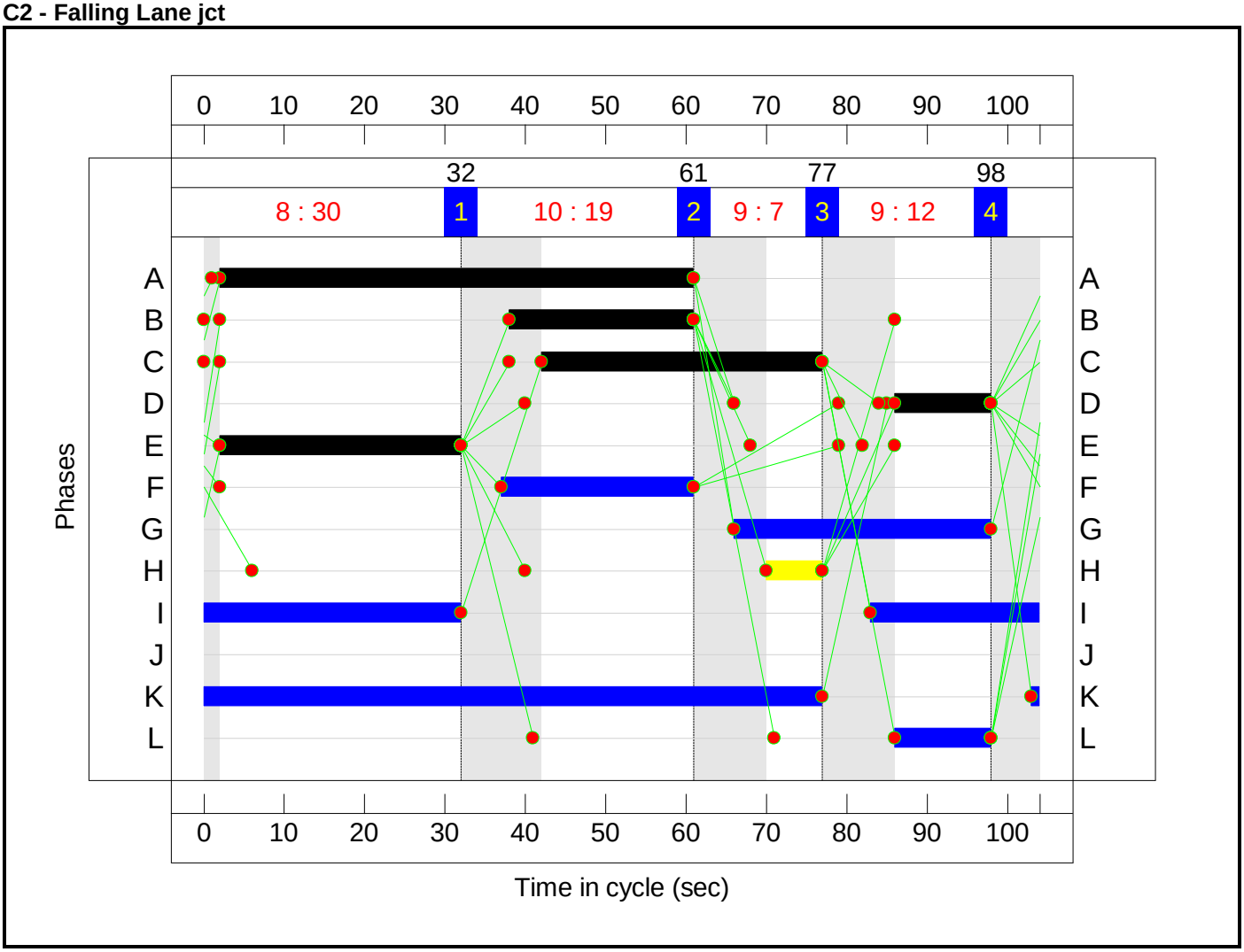

Network Results

Item	Lane Description	Lane Type	Full Phase	Arrow Phase	Num Greens	Total Green (s)	Arrow Green (s)	Demand Flow (pcu)	Sat Flow (pcu/Hr)	Capacity (pcu)	Deg Sat (%)	Turners In Gaps (pcu)	Turners When Unopposed (pcu)	Turners In Intergreen (pcu)	Total Delay (pcuHr)	Av. Delay Per PCU (s/pcu)	Mean Max Queue (pcu)
Network: Chantry Close/High Street	**-**	**-**	**-**		**-**	**-**	**-**	**-**	**-**	**-**	**61.5%**	**116**	**12**	**3**	**32.7**	**-**	**-**
J1: Tesco jct	**-**	**-**	**-**		**-**	**-**	**-**	**-**	**-**	**-**	**61.5%**	**116**	**12**	**3**	**12.6**	**-**	**-**
1/1	High Street N Ahead	U	C1:A		1	50	-	446	1905	974	45.8%	-	-	-	2.2	17.5	7.5
1/2+1/3	High Street N Right Ahead	U+O	C1:A	C1:D	1	50	5	409	1905:1626	722+337	38.6 : 38.6%	116	12	3	2.0	17.9	4.3
2/2+2/1	Chantry Close Left Right	U	C1:C		1	25	-	309	1692:1505	286+216	61.5 : 61.5%	-	-	-	3.1	36.6	6.0
5/1	High Street internal NB Ahead Left	U	C1:B		1	40	-	426	1818	869	49.0%	-	-	-	2.4	20.1	7.7
5/2	High Street internal NB Ahead	U	C1:B		1	40	-	452	1915	915	49.4%	-	-	-	2.5	19.9	8.1
6/1	High Street SB Ahead	U	C1:I		1	90	-	603	1940	1789	33.7%	-	-	-	0.3	1.8	1.1
6/2	High Street SB Ahead	U	C1:I		1	90	-	298	1940	1789	16.7%	-	-	-	0.1	1.3	0.2
J2: Falling Lane jct	**-**	**-**	**-**		**-**	**-**	**-**	**-**	**-**	**-**	**57.9%**	**0**	**0**	**0**	**20.1**	**-**	**-**
1/1	Falling Lane Left	U	C2:E		1	30	-	173	1620	483	35.8%	-	-	-	1.7	34.5	4.2
1/2+1/3	Falling Lane Ahead Right	U	C2:E		1	30	-	381	1789:1737	332+334	57.2 : 57.2%	-	-	-	3.7	35.0	5.4
4/1	High Street S Left Ahead	U	C2:C		1	35	-	244	1857	643	38.0%	-	-	-	2.0	30.1	5.6
4/2+4/3	High Street S Right Ahead	U	C2:C	C2:J	1	35	0	344	1866:1665	439+263	49.0 : 49.0%	-	-	-	2.9	29.9	5.5

6/1	Trout Road Ahead Right Left	U	C2:D		1	12	-	127	1793	224	56.7%	-	-	-	2.2	61.1	4.1
7/2+7/1	High Street internal SB Left	U	C2:A		1	59	-	379	1827:1800	595+586	32.1 : 32.1%	-	-	-	1.3	12.6	2.8
7/3	High Street internal SB Ahead	U	C2:B		1	23	-	224	1895	437	51.2%	-	-	-	2.7	43.3	6.1
7/4	High Street internal SB Ahead	U	C2:B		1	23	-	253	1895	437	57.9%	-	-	-	3.2	45.2	7.1
7/5	High Street internal SB Right	U	C2:B		1	23	-	45	1579	364	12.3%	-	-	-	0.5	37.3	1.1

C1 - Tesco jct	PRC for Signalled Lanes (%):	46.2	Total Delay for Signalled Lanes (pcuHr):	12.63	Cycle Time (s): 90
C2 - Falling Lane jct	PRC for Signalled Lanes (%):	55.6	Total Delay for Signalled Lanes (pcuHr):	20.09	Cycle Time (s): 104
	PRC Over All Lanes (%):	46.2	Total Delay Over All Lanes(pcuHr):	32.72	

Appendix D Enterprise Car Club Letter

26th June 2020

To Whom it May Concern at the London Borough of Hillingdon

Dear Sir or Madam

Car Club provision at 217 High Street, Yiewsley UB7 7GN. Planning ref: 68663/APP/2020/705 – Proposed erection of Health Facility and 235 residential apartments and associated infrastructure

Enterprise Car Club are in discussions with Taylor Wimpey and would like to express interest in providing a car club service and vehicle(s) at the above address.

These discussions include providing

- 4 Car Club Vehicle(s)
- Free Car Club membership for residents and employees of the Health Facility.
- Access for residents and employees of the Health Facility to all car club vehicles in the UK.
- Discount for active car club members with Enterprise Rent-A-Car. Enterprise Rent-A-Car have a branch at 1-2 Lees Road, Uxbridge Road, Uxbridge, UB10 0PQ
- The car club vehicles would also serve the surrounding community in UB7

The above car club service and package will be introduced to new residents, employees and users as early to reduce the need to own a vehicle.

Yours faithfully

Keith Kelly
Head of Partnerships – Enterprise Car Club

Appendix E Apollo Medical Letter

Taylor, Ben

From: Rob James <rob.james@apollomedical.co.uk>
Sent: 10 June 2020 15:37
To: Taylor, Ben
Cc: Robin Pearmain - TW West London
Subject: Application Reference 68663/APP/2020/705 217 High Street, Yiewsley, West London.

Dear Ben,

As you know Hilingdon CCG are very supportive of Taylor Wimpey's proposals to deliver 235 units and a D1 health facility at High Street Yiewsley.

I have reviewed the latest amendments to the site layout and the access comments from the GLA and confirm the following:

2 metre Pavement Position
The pavement that runs in between Block A and B+C cannot been located immediately next to the health facility for privacy & patient confidentiality reasons and would not be acceptable to the CCG or NHS England. The now proposed pavement is in much more suitable position.

20 parking spaces
The proposed agreement between the CCG and Taylor Wimpey is based on a 932sqm D1 health Facility with 20 allocated parking spaces. We consider the number of car parking spaces for the health hub is appropriate for its use. GP's and other health providers will be providing services from a number of sites as part of the primary care network. Emergency and house calls require close access to cars and vulnerable patients will require access to adjacent parking. We therefore feel that the 20 spaces are appropriate for a PTAL 3 location and for a facility of this purpose.

Kind regards

Rob James

Managing Director | Apollo Capital Projects
Mobile: 07881 921 364

Apollo
The Primary Care Property Experts

8 Village Way | Green Meadows | Springs Business Park | Cardiff | CF15 7NE |
Main 02920 022 494

Apollo Capital Projects Development Ltd, Registered in England and Wales No. 4246800, Registered Office: Columba House, Adastral Park, Martlesham Heath, Ipswich IP5 3RE

BBH BUILDING BETTER HEALTHCARE Winning Team & Multiple Finalists

Appendix F Queue Length Data

Hillingdon, Middlesex
Queue Length Survey

Site 2 of 4
A408 Falling Lane
High Street
Trout Road
A408 High Street

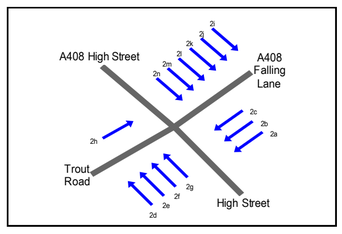

Lat/Long
lat 51.515364° lon -0.474578°

Date
Thursday 11 July 2019

Weather
Sunny Intervals
Temp: 8°C

0700 - 1000 (Thursday AM Peak)

TIME	2a	2b	2c	2d	2e	2f	2g	2h	2i	2j	2k	2l	2m	2n
07:00:00 - 07:01:00	1	0	0	2	2	1	0	2	3	1	0	0	0	0
07:01:00 - 07:02:00	1	1	1	2	1	2	0	2	3	1	0	0	2	0
07:02:00 - 07:03:00	1	2	1	3	0	1	0	1	2	0	0	1	2	0
07:03:00 - 07:04:00	1	2	2	2	2	0	0	2	3	0	0	3	5	0
07:04:00 - 07:05:00	1	2	2	2	2	2	0	2	5	0	0	4	4	0
07:05:00 - 07:06:00	1	1	1	3	0	0	0	2	0	0	0	4	4	1
07:06:00 - 07:07:00	2	3	3	2	1	1	0	2	0	0	0	6	5	1
07:07:00 - 07:08:00	4	5	4	3	0	3	0	1	2	0	0	4	4	1
07:08:00 - 07:09:00	2	1	2	2	3	2	0	1	1	0	0	4	4	2
07:09:00 - 07:10:00	4	1	2	1	1	0	0	1	8	0	0	2	3	0
07:10:00 - 07:11:00	0	2	4	2	2	0	0	1	5	1	0	1	4	1
07:11:00 - 07:12:00	1	2	1	0	3	0	0	1	5	2	0	2	5	1
07:12:00 - 07:13:00	2	3	1	2	2	3	0	3	5	1	0	2	5	2
07:13:00 - 07:14:00	0	3	0	3	0	1	0	1	6	0	0	4	2	1
07:14:00 - 07:15:00	0	3	0	4	1	2	0	1	0	0	0	4	2	0
07:15:00 - 07:16:00	1	1	2	2	0	0	0	4	0	1	1	3	4	0
07:16:00 - 07:17:00	2	1	3	4	1	2	0	1	5	0	0	1	2	1
07:17:00 - 07:18:00	0	0	3	0	1	1	0	3	0	0	0	3	5	2
07:18:00 - 07:19:00	1	2	2	2	2	0	0	4	0	0	0	3	5	0
07:19:00 - 07:20:00	4	4	4	3	1	2	0	1	5	2	0	1	2	1
07:20:00 - 07:21:00	1	5	1	2	3	0	0	0	3	1	0	3	3	1
07:21:00 - 07:22:00	3	5	3	1	0	1	0	1	4	1	0	1	0	1
07:22:00 - 07:23:00	4	2	4	3	1	0	0	2	2	0	0	2	3	2
07:23:00 - 07:24:00	2	3	5	2	3	1	0	1	3	0	0	2	3	6
07:24:00 - 07:25:00	2	2	5	3	2	0	0	2	3	0	0	3	4	3
07:25:00 - 07:26:00	3	2	5	1	2	1	0	2	6	0	0	1	1	4
07:26:00 - 07:27:00	2	2	3	2	4	1	0	3	2	0	0	1	2	4
07:27:00 - 07:28:00	2	2	4	0	0	1	0	3	2	1	0	0	4	2
07:28:00 - 07:29:00	3	2	2	1	0	2	0	3	0	0	0	1	6	1
07:29:00 - 07:30:00	2	1	0	2	2	3	0	1	1	0	0	1	9	1
07:30:00 - 07:31:00	1	3	2	4	3	1	0	0	1	0	0	0	0	0
07:31:00 - 07:32:00	2	3	3	0	0	3	0	0	2	0	0	4	2	1
07:32:00 - 07:33:00	1	2	3	1	1	1	0	3	4	1	0	2	4	1
07:33:00 - 07:34:00	2	3	3	2	1	1	0	3	4	1	0	3	6	1
07:34:00 - 07:35:00	3	3	3	0	0	5	0	0	1	0	1	3	3	0
07:35:00 - 07:36:00	4	3	3	4	3	1	0	3	4	1	0	3	8	2
07:36:00 - 07:37:00	0	0	2	0	1	2	0	3	0	0	1	1	1	0
07:37:00 - 07:38:00	3	3	2	2	2	2	0	1	0	0	0	3	3	0
07:38:00 - 07:39:00	4	3	4	1	0	1	0	3	6	1	0	2	5	0
07:39:00 - 07:40:00	4	4	1	1	1	3	0	3	3	0	0	3	4	0
07:40:00 - 07:41:00	6	4	1	2	3	1	0	0	3	0	0	4	5	0
07:41:00 - 07:42:00	5	4	1	2	2	2	0	1	3	2	0	3	3	3
07:42:00 - 07:43:00	3	3	0	2	1	3	0	2	2	1	0	3	4	3
07:43:00 - 07:44:00	3	5	1	2	2	0	0	1	6	4	1	6	6	3
07:44:00 - 07:45:00	3	6	1	4	2	1	0	1	4	2	0	3	6	1
07:45:00 - 07:46:00	2	3	2	2	3	3	0	3	0	0	0	4	7	2
07:46:00 - 07:47:00	6	4	3	2	2	7	0	3	3	1	0	5	6	1
07:47:00 - 07:48:00	5	3	6	2	0	3	0	1	2	0	0	5	8	1
07:48:00 - 07:49:00	7	3	7	2	0	4	0	2	6	0	0	0	4	2
07:49:00 - 07:50:00	4	5	1	2	4	3	0	0	3	0	0	1	8	5
07:50:00 - 07:51:00	4	4	3	2	3	2	0	1	3	0	0	1	7	5
07:51:00 - 07:52:00	4	6	5	1	1	2	0	1	1	1	0	1	2	0
07:52:00 - 07:53:00	6	4	6	1	2	3	0	1	2	1	1	3	7	1
07:53:00 - 07:54:00	1	2	3	2	3	3	0	4	1	0	0	4	5	2
07:54:00 - 07:55:00	1	2	2	2	2	3	0	3	1	0	0	5	5	1
07:55:00 - 07:56:00	4	4	5	3	2	0	0	5	6	2	0	3	5	1
07:56:00 - 07:57:00	4	6	1	0	1	0	0	5	4	1	0	3	5	0
07:57:00 - 07:58:00	4	5	3	4	2	0	0	5	5	2	0	6	6	0
07:58:00 - 07:59:00	6	7	3	1	1	3	0	1	5	3	0	3	7	1
07:59:00 - 08:00:00	6	6	7	0	0	3	0	2	0	1	0	3	8	1
08:00:00 - 08:01:00	6	5	5	2	0	4	0	1	5	4	0	1	3	1
08:01:00 - 08:02:00	3	2	0	4	1	4	0	2	4	2	0	1	4	1
08:02:00 - 08:03:00	3	4	0	0	0	4	0	3	6	2	1	3	6	1
08:03:00 - 08:04:00	4	2	4	2	3	3	0	2	2	0	0	3	6	1
08:04:00 - 08:05:00	7	4	3	3	2	0	0	1	2	4	0	0	2	3
08:05:00 - 08:06:00	4	4	3	1	0	4	0	2	1	1	1	1	0	0
08:06:00 - 08:07:00	4	3	2	3	3	0	0	2	1	0	0	3	2	0
08:07:00 - 08:08:00	5	4	1	3	2	3	0	3	6	0	0	3	2	0
08:08:00 - 08:09:00	4	3	1	5	2	0	0	5	0	0	0	4	2	0
08:09:00 - 08:10:00	5	7	2	2	2	3	0	5	7	3	0	6	6	2
08:10:00 - 08:11:00	2	3	4	3	2	1	0	1	5	0	0	4	5	0
08:11:00 - 08:12:00	6	8	1	2	3	0	0	4	0	0	0	5	5	1
08:12:00 - 08:13:00	6	3	3	3	2	5	0	5	2	2	1	4	5	2
08:13:00 - 08:14:00	7	4	5	2	2	6	0	3	3	2	0	5	6	2
08:14:00 - 08:15:00	4	4	4	2	3	4	0	3	5	2	0	2	3	1
08:15:00 - 08:16:00	5	4	4	2	2	4	0	1	2	1	0	3	7	1
08:16:00 - 08:17:00	7	4	4	2	2	2	0	2	2	1	0	2	6	1
08:17:00 - 08:18:00	6	4	2	2	3	2	0	3	2	0	0	0	1	0
08:18:00 - 08:19:00	6	4	2	2	3	1	0	3	5	0	0	4	6	3
08:19:00 - 08:20:00	4	6	0	2	2	4	0	6	6	1	0	3	3	2
08:20:00 - 08:21:00	4	6	0	2	4	2	0	2	4	1	0	6	4	1
08:21:00 - 08:22:00	4	3	2	2	1	4	0	3	3	1	0	2	4	1
08:22:00 - 08:23:00	4	7	3	3	2	3	0	4	0	1	1	2	4	1
08:23:00 - 08:24:00	4	7	3	2	3	4	0	5	5	3	0	2	6	2
08:24:00 - 08:25:00	6	3	1	3	2	3	0	2	7	1	0	4	6	2
08:25:00 - 08:26:00	6	7	2	1	2	2	0	4	6	1	0	5	5	2
08:26:00 - 08:27:00	7	4	3	1	1	3	0	4	4	1	0	2	4	1
08:27:00 - 08:28:00	4	6	2	2	3	2	0	2	6	2	0	2	4	2
08:28:00 - 08:29:00	4	3	2	2	2	3	0	3	5	3	0	2	3	0
08:29:00 - 08:30:00	4	3	3	3	3	1	0	4	3	1	0	1	3	0
08:30:00 - 08:31:00	4	6	4	2	4	3	0	3	4	1	0	3	5	0
08:31:00 - 08:32:00	1	7	2	2	3	5	0	2	2	0	1	2	3	0
08:32:00 - 08:33:00	1	2	4	2	3	2	0	2	3	0	0	3	6	1
08:33:00 - 08:34:00	2	3	6	2	0	0	0	3	3	0	0	4	5	1
08:34:00 - 08:35:00	4	5	5	0	0	3	0	5	2	1	0	1	2	0
08:35:00 - 08:36:00	4	6	6	2	2	2	0	1	3	3	1	4	6	1
08:36:00 - 08:37:00	1	6	4	1	0	5	0	3	3	2	0	0	4	1
08:37:00 - 08:38:00	1	6	4	2	2	3	0	2	2	0	0	6	8	1
08:38:00 - 08:39:00	1	4	5	0	2	4	0	5	4	2	0	3	3	1
08:39:00 - 08:40:00	3	1	3	4	3	0	0	3	2	3	0	3	4	1
08:40:00 - 08:41:00	3	1	4	3	0	1	0	3	5	3	0	3	3	0
08:41:00 - 08:42:00	3	6	2	2	3	2	0	5	7	2	0	4	5	1
08:42:00 - 08:43:00	3	3	3	2	3	3	0	2	1	1	1	4	6	1
08:43:00 - 08:44:00	2	6	5	3	2	3	0	2	5	3	0	4	6	2
08:44:00 - 08:45:00	1	6	5	0	0	3	0	3	6	2	1	3	5	1
08:45:00 - 08:46:00	1	7	5	2	3	1	0	2	0	0	0	4	7	1
08:46:00 - 08:47:00	3	4	4	0	2	2	0	3	5	1	0	5	7	1
08:47:00 - 08:48:00	3	4	5	0	0	2	0	1	5	1	0	7	8	1
08:48:00 - 08:49:00	2	3	2	2	0	4	0	4	4	1	0	1	3	0
08:49:00 - 08:50:00	1	2	1	2	3	3	0	2	2	1	0	2	4	1
08:50:00 - 08:51:00	3	4	5	3	1	4	0	2	2	1	0	5	5	1
08:51:00 - 08:52:00	2	7	6	3	3	4	0	2	0	0	0	3	7	1
08:52:00 - 08:53:00	1	7	6	2	2	4	0	4	6	2	1	2	5	2
08:53:00 - 08:54:00	5	7	6	2	4	2	0	6	3	2	0	2	5	2
08:54:00 - 08:55:00	5	5	6	0	0	3	0	3	2	2	0	2	4	1
08:55:00 - 08:56:00	2	6	7	0	0	3	0	5	3	3	0	2	3	1
08:56:00 - 08:57:00	3	6	7	2	3	0	0	2	5	3	1	3	6	1
08:57:00 - 08:58:00	3	6	7	2	3	3	0	4	3	2	0	1	5	0
08:58:00 - 08:59:00	4	6	6	2	3	2	0	1	2	3	0	6	6	0
08:59:00 - 09:00:00	3	3	4	0	2	1	0	1	3	0	0	1	5	1
09:00:00 - 09:01:00	1	4	2	3	2	2	0	2	4	3	0	2	6	3
09:01:00 - 09:02:00	3	7	3	2	3	2	0	2	2	0	1	3	8	1
09:02:00 - 09:03:00	2	5	2	1	4	2	0	2	3	3	0	2	1	2
09:03:00 - 09:04:00	2	5	3	3	2	3	0	2	4	2	0	2	2	3
09:04:00 - 09:05:00	3	5	3	2	2	3	0	3	5	1	0	3	5	0
09:05:00 - 09:06:00	6	5	3	2	4	3	0	2	6	0	0	0	1	0
09:06:00 - 09:07:00	5	6	2	4	3	2	0	1	3	2	0	5	5	0
09:07:00 - 09:08:00	6	7	6	1	3	2	0	1	4	2	0	4	2	4
09:08:00 - 09:09:00	1	2	2	1	3	0	0	0	5	1	1	4	2	3
09:09:00 - 09:10:00	0	2	2	2	2	3	0	1	4	2	0	1	1	3
09:10:00 - 09:11:00	4	4	4	2	2	1	0	1	3	3	0	4	3	0
09:11:00 - 09:12:00	0	4	3	0	0	3	0	3	5	0	0	0	1	0
09:12:00 - 09:13:00	1	4	3	3	4	3	0	1	4	1	0	2	5	0
09:13:00 - 09:14:00	2	5	6	2	1	2	0	1	3	2	0	4	6	1
09:14:00 - 09:15:00	2	6	4	2	2	2	0	3	2	1	0	1	2	0
09:15:00 - 09:16:00	5	3	4	3	3	2	0	4	2	1	0	4	5	0
09:16:00 - 09:17:00	2	5	3	1	2	2	0	5	5	0	0	7	6	0
09:17:00 - 09:18:00	0	4	3	1	3	4	0	1	5	2	0	7	6	0
09:18:00 - 09:19:00	1	4	5	2	0	2	0	0	5	1	0	5	4	2
09:19:00 - 09:20:00	4	2	0	2	1	3	0	1	2	0	0	2	6	0
09:20:00 - 09:21:00	2	1	0	1	1	2	0	2	1	0	0	2	7	0
09:21:00 - 09:22:00	3	2	0	3	2	1	0	4	6	2	0	1	3	1
09:22:00 - 09:23:00	3	4	2	1	0	3	0	1	4	4	0	2	4	0
09:23:00 - 09:24:00	1	3	1	2	1	1	0	0	6	3	0	4	8	1
09:24:00 - 09:25:00	3	6	1	2	2	2	0	2	1	1	0	2	3	0
09:25:00 - 09:26:00	3	1	1	2	3	1	0	5	4	0	0	4	4	1
09:26:00 - 09:27:00	6	3	2	3	2	3	0	2	5	1	0	4	4	2
09:27:00 - 09:28:00	2	2	1	2	2	5	0	4	4	0	0	2	2	1
09:28:00 - 09:29:00	2	4	3	3	2	3	0	2	6	0	0	3	3	1
09:29:00 - 09:30:00	1	2	1	3	0	0	0	1	3	1	0	5	3	2
09:30:00 - 09:31:00	2	2	0	3	2	5	0	5	4	2	0	5	3	2
09:31:00 - 09:32:00	3	5	2	3	2	5	0	4	5	0	0	1	4	0
09:32:00 - 09:33:00	0	5	4	2	2	3	0	1	4	2	0	2	1	0
09:33:00 - 09:34:00	0	2	4	2	1	1	0	0	2	3	0	3	2	0
09:34:00 - 09:35:00	3	4	2	2	1	2	0	4	4	0	0	1	3	0
09:35:00 - 09:36:00	1	2	2	3	2	3	0	1	5	0	0	2	2	0
09:36:00 - 09:37:00	1	4	2	2	3	2	0	3	2	2	0	3	2	0
09:37:00 - 09:38:00	2	5	2	2	2	2	0	3	0	2	0	1	4	0
09:38:00 - 09:39:00	1	3	3	2	2	3	0	7	3	0	0	3	4	0
09:39:00 - 09:40:00	2	2	5	3	3	2	0	0	4	2	0	1	4	0
09:40:00 - 09:41:00	2	5	2	3	1	3	0	0	2	0	0	2	4	0
09:41:00 - 09:42:00	0	3	2	4	2	4	0	2	4	1	0	4	6	0
09:42:00 - 09:43:00	1	7	4	0	3	5	0	2	3	2	0	2	4	0
09:43:00 - 09:44:00	3	2	1	5	2	3	0	2	2	1	0	2	3	0
09:44:00 - 09:45:00	1	2	2	4	3	2	0	2	2	1	0	3	3	2
09:45:00 - 09:46:00	2	2	2	3	2	3	0	1	1	0	0	3	2	1
09:46:00 - 09:47:00	2	3	4	3	2	4	0	2	1	3	0	2	2	1
09:47:00 - 09:48:00	2	2	1	3	1	5	0	1	1	1	0	4	4	1
09:48:00 - 09:49:00	4	2	2	2	2	3	0	1	1	0	0	1	2	0
09:49:00 - 09:50:00	4	3	2	3	2	4	0	0	2	2	0	2	2	0
09:50:00 - 09:51:00	4	1	4	3	3	2	0	0	3	1	0	2	4	1
09:51:00 - 09:52:00	6	1	2	3	1	3	0	1	3	1	0	2	6	0
09:52:00 - 09:53:00	4	5	1	3	2	4	0	1	3	0	0	2	7	0
09:53:00 - 09:54:00	4	4	5	3	1	3	0	1	3	2	0	6	7	0
09:54:00 - 09:55:00	2	4	4	4	2	2	0	1	1	3	0	3	6	0
09:55:00 - 09:56:00	3	1	0	3	0	1	0	2	3	0	0	3	5	0
09:56:00 - 09:57:00	4	5	4	2	2	2	0	3	4	1	0	2	4	1
09:57:00 - 09:58:00	0	3	3	3	1	1	0	5	2	2	1	1	3	0
09:58:00 - 09:59:00	1	6	5	4	3	3	0	2	5	2	0	4	6	1
09:59:00 - 10:00:00	4	5	3	3	2	2	0	2	2	0	0	3	0	0

Date
Thursday 11 July 2019

Weather
Sunny
Temp: 21°C

1500 - 1900 (Thursday PM Peak)

TIME	2a	2b	2c	2d	2e	2f	2g	2h	2i	2j	2k	2l	2m	2n
15:00:00 - 15:01:00	2	5	3	2	2	6	0	2	5	3	0	3	6	0
15:01:00 - 15:02:00	2	0	1	3	3	4	0	2	0	0	0	4	6	0
15:02:00 - 15:03:00	3	4	7	1	1	7	0	4	2	1	0	2	3	0
15:03:00 - 15:04:00	3	4	7	2	2	3	0	1	0	0	0	4	5	0
15:04:00 - 15:05:00	2	4	5	0	0	2	0	1	1	0	0	2	2	1
15:05:00 - 15:06:00	2	2	1	1	2	6	0	3	1	0	0	2	2	1
15:06:00 - 15:07:00	3	3	2	3	4	3	0	4	1	0	0	2	3	2
15:07:00 - 15:08:00	3	3	4	3	4	3	0	0	6	1	0	2	4	1
15:08:00 - 15:09:00	1	4	2	3	4	1	0	0	1	0	0	2	5	1
15:09:00 - 15:10:00	2	4	3	2	2	2	0	2	7	2	0	3	6	0
15:10:00 - 15:11:00	3	5	3	0	2	3	0	4	3	3	0	0	4	1
15:11:00 - 15:12:00	2	4	4	2	3	3	0	2	8	3	0	0	4	2
15:12:00 - 15:13:00	0	3	5	2	2	3	0	5	1	0	0	1	0	0
15:13:00 - 15:14:00	4	6	6	1	2	1	0	4	4	0	1	3	5	2
15:14:00 - 15:15:00	3	4	3	2	4	3	0	4	1	0	0	1	3	0
15:15:00 - 15:16:00	2	5	4	4	2	3	0	4	0	1	0	3	6	1
15:16:00 - 15:17:00	1	4	3	2	3	2	0	4	0	1	0	5	7	0
15:17:00 - 15:18:00	3	6	4	2	3	2	0	1	2	0	0	2	4	0
15:18:00 - 15:19:00	2	4	6	4	2	4	0	1	1	0	0	5	6	1
15:19:00 - 15:20:00	3	6	5	1	0	5	0	2	2	0	0	2	4	1
15:20:00 - 15:21:00	4	5	3	3	1	2	0	3	0	0	1	1	1	0
15:21:00 - 15:22:00	5	3	6	3	2	3	0	1	2	1	0	5	7	0
15:22:00 - 15:23:00	5	2	3	3	2	3	0	3	2	0	0	5	7	1
15:23:00 - 15:24:00	3	2	4	2	2	5	0	2	2	0	0	5	7	2
15:24:00 - 15:25:00	4	3	6	3	3	2	0	2	6	2	0	6	6	1
15:25:00 - 15:26:00	4	4	4	3	2	3	0	3	6	1	0	8	7	1
15:26:00 - 15:27:00	3	5	6	3	0	2	0	3	9	1	0	5	7	0
15:27:00 - 15:28:00	4	6	4	3	1	3	0	2	5	1	1	6	7	0
15:28:00 - 15:29:00	5	4	3	5	3	0	0	1	5	1	0	6	5	1
15:29:00 - 15:30:00

15:35:00 - 15:36:00	3	5	5	5	3	2	0	3	6	2	0	3	6	2
15:36:00 - 15:37:00	4	6	4	4	2	3	0	4	4	2	0	4	6	0
15:37:00 - 15:38:00	5	4	3	4	0	4	0	3	4	1	0	4	6	0
15:38:00 - 15:39:00	6	3	3	1	1	3	0	0	5	2	0	3	3	1
15:39:00 - 15:40:00	5	4	3	2	0	5	0	2	4	2	0	4	5	0
15:40:00 - 15:41:00	4	6	2	4	2	3	0	6	5	2	0	6	7	1
15:41:00 - 15:42:00	6	5	3	0	0	2	0	7	2	2	0	3	4	0
15:42:00 - 15:43:00	5	2	4	3	4	1	0	3	3	0	0	5	4	0
15:43:00 - 15:44:00	2	3	4	2	2	3	0	3	4	0	0	4	7	0
15:44:00 - 15:45:00	3	0	3	3	3	1	0	4	5	0	1	5	7	0
15:45:00 - 15:46:00	6	6	3	3	2	4	0	5	5	0	0	6	7	2
15:46:00 - 15:47:00	5	4	2	1	0	0	0	4	3	0	0	6	8	2
15:47:00 - 15:48:00	4	3	4	2	3	2	0	1	6	1	0	5	6	0
15:48:00 - 15:49:00	3	4	3	3	3	5	0	2	1	1	0	2	4	1
15:49:00 - 15:50:00	5	5	2	3	2	2	0	2	3	1	1	4	5	1
15:50:00 - 15:51:00	6	5	6	0	0	0	0	4	4	0	0	1	3	0
15:51:00 - 15:52:00	4	4	4	3	4	2	0	1	5	0	0	2	6	0
15:52:00 - 15:53:00	3	6	6	3	4	5	0	2	2	0	0	0	3	0
15:53:00 - 15:54:00	4	4	5	3	2	1	0	2	4	0	0	2	4	0
15:54:00 - 15:55:00	5	3	5	1	3	2	0	2	5	0	0	2	5	2
15:55:00 - 15:56:00	4	3	6	2	3	1	0	2	4	0	0	3	5	2
15:56:00 - 15:57:00	6	4	4	2	3	1	0	4	8	1	0	3	7	2
15:57:00 - 15:58:00	5	5	3	2	2	4	0	4	6	0	0	4	7	0
15:58:00 - 15:59:00	3	4	2	4	3	2	0	2	7	3	0	4	7	0
15:59:00 - 16:00:00	4	3	4	3	2	2	0	3	6	3	1	2	3	1
16:00:00 - 16:01:00	3	2	3	2	3	4	0	4	5	2	0	5	4	2
16:01:00 - 16:02:00	3	4	4	4	3	2	0	1	7	3	0	5	5	2
16:02:00 - 16:03:00	2	5	4	1	0	2	0	4	2	0	0	0	0	0
16:03:00 - 16:04:00	3	7	5	3	4	2	0	0	3	0	0	2	4	1
16:04:00 - 16:05:00	2	2	3	2	0	5	0	5	2	0	0	2	4	0
16:05:00 - 16:06:00	2	5	6	2	3	2	0	1	3	0	0	5	6	0
16:06:00 - 16:07:00	2	7	4	3	2	4	0	2	4	1	0	5	6	1
16:07:00 - 16:08:00	5	2	4	3	2	2	0	2	2	2	0	5	4	1
16:08:00 - 16:09:00	5	3	5	0	0	0	0	4	2	2	0	3	1	1
16:09:00 - 16:10:00	3	4	8	2	0	1	0	4	2	2	0	2	1	1
16:10:00 - 16:11:00	5	6	7	2	3	3	0	4	2	1	0	2	3	1
16:11:00 - 16:12:00	5	6	7	1	2	5	0	7	7	1	0	5	6	1
16:12:00 - 16:13:00	5	4	8	3	4	2	0	2	7	1	0	6	7	1
16:13:00 - 16:14:00	3	4	5	2	1	5	0	4	4	1	0	2	3	1
16:14:00 - 16:15:00	6	4	7	2	3	4	0	2	6	1	0	5	6	1
16:15:00 - 16:16:00	1	5	4	3	3	3	0	2	3	0	0	1	1	0
16:16:00 - 16:17:00	2	2	1	2	3	4	0	7	1	1	0	2	2	1
16:17:00 - 16:18:00	3	3	3	3	2	2	0	2	4	0	0	4	4	0
16:18:00 - 16:19:00	1	3	2	3	2	3	0	2	3	1	1	4	4	4
16:19:00 - 16:20:00	3	7	1	3	4	1	0	1	4	2	0	5	5	4
16:20:00 - 16:21:00	3	7	5	2	3	5	0	1	7	1	0	5	5	6
16:21:00 - 16:22:00	3	5	7	3	2	2	0	2	7	1	0	6	7	6
16:22:00 - 16:23:00	2	7	3	3	3	3	0	2	3	1	0	1	3	3
16:23:00 - 16:24:00	2	6	3	4	3	3	0	3	4	1	0	2	4	3
16:24:00 - 16:25:00	2	7	5	2	0	2	0	1	4	2	0	3	4	1
16:25:00 - 16:26:00	2	5	4	2	2	2	0	2	0	0	0	2	4	1
16:26:00 - 16:27:00	4	7	5	0	1	2	0	4	3	1	0	4	5	1
16:27:00 - 16:28:00	2	4	3	2	4	1	0	1	3	0	0	4	6	1
16:28:00 - 16:29:00	2	3	5	3	4	2	0	3	7	0	0	5	6	0
16:29:00 - 16:30:00	4	3	4	3	2	2	0	1	3	2	0	3	3	0
16:30:00 - 16:31:00	0	1	1	3	2	2	0	1	0	0	0	3	3	0
16:31:00 - 16:32:00	1	3	3	3	2	2	0	0	7	0	0	4	8	5
16:32:00 - 16:33:00	2	3	6	2	2	2	0	0	2	1	0	3	4	2
16:33:00 - 16:34:00	4	3	6	3	3	3	0	1	4	1	0	3	4	2
16:34:00 - 16:35:00	5	4	3	4	1	2	0	3	4	1	0	3	5	2
16:35:00 - 16:36:00	1	8	1	3	2	2	0	6	3	0	0	0	0	0
16:36:00 - 16:37:00	2	8	1	2	3	3	0	0	4	0	0	5	6	0
16:37:00 - 16:38:00	2	5	5	3	2	2	0	1	2	0	0	7	8	0
16:38:00 - 16:39:00	3	4	5	3	1	3	0	0	3	0	1	6	5	0
16:39:00 - 16:40:00	3	7	6	2	2	3	0	2	1	0	0	6	7	0
16:40:00 - 16:41:00	4	7	6	3	3	3	0	4	0	0	0	3	5	1
16:41:00 - 16:42:00	4	5	2	2	1	2	0	3	0	0	0	3	5	0
16:42:00 - 16:43:00	2	3	3	3	3	2	0	6	0	0	0	6	7	1
16:43:00 - 16:44:00	3	5	5	3	3	3	0	0	4	2	0	3	4	0
16:44:00 - 16:45:00	3	5	6	4	2	2	0	2	3	2	0	7	6	0
16:45:00 - 16:46:00	2	6	5	3	3	1	0	7	4	1	0	4	4	1
16:46:00 - 16:47:00	3	6	7	3	2	2	0	1	1	0	0	6	8	2
16:47:00 - 16:48:00	3	3	3	4	2	2	0	2	1	2	0	3	4	0
16:48:00 - 16:49:00	2	5	4	3	2	2	0	2	1	0	0	5	4	0
16:49:00 - 16:50:00	2	3	7	4	3	3	0	0	6	0	0	4	5	1
16:50:00 - 16:51:00	3	2	5	3	4	2	0	2	2	0	0	5	6	4
16:51:00 - 16:52:00	3	2	6	2	2	1	0	0	5	1	0	6	7	3
16:52:00 - 16:53:00	3	2	3	3	3	2	0	1	0	0	0	5	7	3
16:53:00 - 16:54:00	3	6	5	2	3	2	0	2	7	0	0	3	7	1
16:54:00 - 16:55:00	1	6	5	2	4	0	0	3	2	0	0	5	8	1
16:55:00 - 16:56:00	1	6	5	3	3	3	0	4	2	0	0	5	6	0
16:56:00 - 16:57:00	1	3	4	2	2	2	0	6	5	3	0	2	6	1
16:57:00 - 16:58:00	2	4	0	3	3	1	0	2	5	3	0	5	6	2
16:58:00 - 16:59:00	4	5	3	3	0	2	0	7	5	0	1	5	6	1
16:59:00 - 17:00:00	4	5	4	2	3	2	0	8	1	0	0	5	6	1
17:00:00 - 17:01:00	3	4	2	2	3	2	0	6	3	1	0	1	2	0
17:01:00 - 17:02:00	2	3	4	2	0	3	0	2	2	0	0	1	6	0
17:02:00 - 17:03:00	1	3	4	3	2	3	0	2	1	1	0	3	4	0
17:03:00 - 17:04:00	1	1	2	6	2	3	0	5	0	0	0	7	6	1
17:04:00 - 17:05:00	2	5	2	2	3	4	0	1	4	3	0	6	7	0
17:05:00 - 17:06:00	2	6	2	3	3	2	0	6	4	3	0	7	7	1
17:06:00 - 17:07:00	1	6	3	2	3	4	0	5	6	3	0	5	6	1
17:07:00 - 17:08:00	2	8	4	3	4	5	0	2	6	3	0	7	8	1
17:08:00 - 17:09:00	0	1	3	3	3	2	0	4	3	1	0	1	4	1
17:09:00 - 17:10:00	0	2	4	4	3	2	0	4	6	2	0	4	5	2
17:10:00 - 17:11:00	6	5	4	3	4	2	0	0	3	2	1	1	5	1
17:11:00 - 17:12:00	5	4	4	2	3	2	0	1	0	0	0	4	8	1
17:12:00 - 17:13:00	5	5	6	3	4	4	0	4	6	4	0	5	8	0
17:13:00 - 17:14:00	5	6	5	4	4	3	0	3	6	5	0	7	6	2
17:14:00 - 17:15:00	3	5	7	3	3	3	0	5	4	0	0	7	6	2
17:15:00 - 17:16:00	3	6	7	4	4	3	0	3	4	0	0	6	7	1
17:16:00 - 17:17:00	4	4	4	3	2	3	0	4	5	0	0	5	4	2
17:17:00 - 17:18:00	4	5	6	4	3	2	0	1	6	0	0	3	4	2
17:18:00 - 17:19:00	6	6	4	3	2	2	0	1	4	1	0	3	4	1
17:19:00 - 17:20:00	7	4	3	3	3	3	0	2	5	1	0	3	7	1
17:20:00 - 17:21:00	2	6	0	3	1	2	0	3	6	3	1	4	5	1
17:21:00 - 17:22:00	2	7	6	3	3	5	0	3	0	0	0	5	6	1
17:22:00 - 17:23:00	0	6	7	3	2	4	0	1	5	2	0	2	2	2
17:23:00 - 17:24:00	2	7	6	3	4	4	0	2	0	0	0	7	5	4
17:24:00 - 17:25:00	2	4	6	2	2	1	0	3	6	1	0	2	7	1
17:25:00 - 17:26:00	0	5	4	3	3	3	0	7	4	0	0	3	7	1
17:26:00 - 17:27:00	2	8	7	3	4	2	0	1	7	3	0	6	6	2
17:27:00 - 17:28:00	2	5	3	3	2	4	0	3	5	2	0	5	5	2
17:28:00 - 17:29:00	3	4	4	3	4	3	0	0	6	2	0	3	6	3
17:29:00 - 17:30:00	3	4	6	3	3	2	0	1	5	2	1	5	4	2
17:30:00 - 17:31:00	0	4	6	2	0	5	0	6	4	2	0	4	5	2
17:31:00 - 17:32:00	1	5	6	3	4	2	0	2	6	2	0	5	5	2
17:32:00 - 17:33:00	1	2	1	3	3	2	0	3	4	2	0	4	5	1
17:33:00 - 17:34:00	1	5	3	3	3	1	0	0	5	3	0	7	8	2
17:34:00 - 17:35:00	3	4	5	2	2	4	0	3	1	1	0	2	8	1
17:35:00 - 17:36:00	3	4	6	2	3	2	0	3	2	0	0	3	7	0
17:36:00 - 17:37:00	4	4	3	3	4	4	0	1	6	3	0	2	8	2
17:37:00 - 17:38:00	3	6	1	2	3	3	0	1	4	0	0	6	8	1
17:38:00 - 17:39:00	5	6	4	2	3	6	0	1	5	0	0	1	9	1
17:39:00 - 17:40:00	3	4	4	3	2	2	0	4	5	1	0	2	6	0
17:40:00 - 17:41:00	3	4	4	3	3	1	0	2	1	1	0	4	7	0
17:41:00 - 17:42:00	3	4	3	2	3	2	0	1	4	1	0	4	7	1
17:42:00 - 17:43:00	1	3	4	3	2	2	0	2	1	0	0	7	8	1
17:43:00 - 17:44:00	3	4	5	3	3	2	0	0	1	1	0	7	7	1
17:44:00 - 17:45:00	0	3	4	2	4	2	0	3	0	0	0	6	7	1
17:45:00 - 17:46:00	3	5	4	2	2	2	0	3	1	1	0	2	1	1
17:46:00 - 17:47:00	4	4	6	3	4	1	0	2	0	0	0	7	5	2
17:47:00 - 17:48:00	2	3	5	2	3	1	0	1	0	0	0	4	4	4
17:48:00 - 17:49:00	6	6	5	3	2	1	0	2	1	2	1	3	2	3
17:49:00 - 17:50:00	3	5	4	3	2	2	0	1	1	0	0	3	5	4
17:50:00 - 17:51:00	4	4	3	2	3	4	0	6	7	2	0	4	7	2
17:51:00 - 17:52:00	5	6	4	2	3	3	0	1	3	0	0	4	7	2
17:52:00 - 17:53:00	6	4	5	3	3	2	0	4	5	0	0	3	3	3
17:53:00 - 17:54:00	2	5	6	2	2	3	0	4	4	1	0	4	6	0
17:54:00 - 17:55:00	4	3	3	4	3	3	0	2	2	0	0	3	5	3
17:55:00 - 17:56:00	3	4	4	4	2	6	0	3	5	2	0	3	5	4
17:56:00 - 17:57:00	4	5	6	3	2	3	0	4	3	2	0	4	7	3
17:57:00 - 17:58:00	6	3	5	4	3	2	0	1	4	3	0	5	5	1
17:58:00 - 17:59:00	3	4	6	4	3	2	0	2	5	1	0	3	5	0
17:59:00 - 18:00:00	3	4	5	4	3	4	0	0	2	1	0	4	5	2
18:00:00 - 18:01:00	3	3	2	2	2	1	0	1	7	4	0	3	6	3
18:01:00 - 18:02:00	1	1	3	2	2	4	0	1	3	2	0	1	5	0
18:02:00 - 18:03:00	3	3	3	2	3	1	0	5	3	0	0	3	5	0
18:03:00 - 18:04:00	5	4	3	2	3	1	0	0	4	0	0	4	7	0
18:04:00 - 18:05:00	3	5	4	4	3	3	0	2	3	1	0	0	2	0
18:05:00 - 18:06:00	3	4	5	2	3	3	0	1	5	1	1	3	3	1
18:06:00 - 18:07:00	2	4	3	3	2	4	0	3	2	0	0	4	5	3
18:07:00 - 18:08:00	1	4	3	3	3	2	0	1	2	0	0	3	6	2
18:08:00 - 18:09:00	1	5	4	4	0	2	0	3	0	0	0	1	3	0
18:09:00 - 18:10:00	1	5	6	4	3	3	0	5	0	0	0	0	2	0
18:10:00 - 18:11:00	3	6	5	3	4	2	0	0	4	1	0	4	5	2
18:11:00 - 18:12:00	2	5	5	2	3	2	0	3	0	0	0	5	6	3
18:12:00 - 18:13:00	4	4	5	2	3	2	0	1	5	3	0	3	6	1
18:13:00 - 18:14:00	1	4	4	4	3	1	0	3	3	0	0	2	5	2
18:14:00 - 18:15:00	2	4	4	4	4	2	0	4	3	1	0	2	6	2
18:15:00 - 18:16:00	2	4	5	2	2	2	0	0	3	3	0	4	5	0
18:16:00 - 18:17:00	2	1	3	5	4	2	0	0	2	1	0	4	4	0
18:17:00 - 18:18:00	2	2	3	3	3	1	0	0	3	3	0	1	2	0
18:18:00 - 18:19:00	2	2	1	2	2	4	0	1	2	0	0	4	6	1
18:19:00 - 18:20:00	2	2	1	2	3	1	0	3	3	0	0	2	3	0
18:20:00 - 18:21:00	3	2	2	3	2	2	0	1	3	0	0	2	6	0
18:21:00 - 18:22:00	2	6	4	2	3	1	0	0	7	1	0	1	6	1
18:22:00 - 18:23:00	1	6	2	2	3	2	0	1	6	0	0	2	7	1
18:23:00 - 18:24:00	2	6	6	3	2	1	0	1	6	0	0	4	7	1
18:24:00 - 18:25:00	1	4	4	2	2	5	0	1	7	1	0	3	4	0
18:25:00 - 18:26:00	0	4	3	3	3	2	0	2	0	0	0	4	5	1
18:26:00 - 18:27:00	3	5	4	4	2	3	0	3	2	1	0	3	6	2
18:27:00 - 18:28:00	3	6	3	3	3	2	0	3	0	0	0	5	7	2
18:28:00 - 18:29:00	1	4	6	2	3	2	0	6	1	0	0	0	3	0
18:29:00 - 18:30:00	2	3	2	3	2	3	0	7	1	0	0	4	5	3
18:30:00 - 18:31:00	3	4	3	3	2	2	0	2	7	1	0	6	7	0
18:31:00 - 18:32:00	3	4	5	3	2	4	0	2	5	1	0	3	3	0
18:32:00 - 18:33:00	3	5	4	1	1	0	0	3	6	1	0	5	6	0
18:33:00 - 18:34:00	3	4	3	3	3	2	0	2	1	0	1	4	5	0
18:34:00 - 18:35:00	2	3	3	2	2	3	0	5	1	1	0	1	1	0
18:35:00 - 18:36:00	2	2	3	3	3	1	0	1	2	0	0	3	7	1
18:36:00 - 18:37:00	3	3	4	2	3	5	0	1	5	0	0	3	6	0
18:37:00 - 18:38:00	1	4	2	3	2	4	0	5	2	0	0	0	1	2
18:38:00 - 18:39:00	2	5	2	5	4	3	0	4	0	0	0	3	6	1
18:39:00 - 18:40:00	2	5	4	4	2	3	0	5	3	0	0	4	5	1
18:40:00 - 18:41:00	2	6	4	3	2	2	0	4	2	1	0	3	1	0
18:41:00 - 18:42:00	1	5	4	2	3	2	0	0	2	1	0	6	6	1
18:42:00 - 18:43:00	0	3	2	3	3	2	0	1	0	0	0	3	7	0
18:43:00 - 18:44:00	1	3	4	0	2	3	0	2	3	0	0	2	0	0
18:44:00 - 18:45:00	1	5	5	4	3	2	0	2	4	0	0	4	5	3
18:45:00 - 18:46:00	3	3	4	3	3	4	0	2	2	1	0	2	3	0
18:46:00 - 18:47:00	2	3	4	2	2	3	0	4	0	0	0	0	2	0
18:47:00 - 18:48:00	3	3	4	3	2	2	0	5	2	1	0	2	4	0
18:48:00 - 18:49:00	1	5	4	4	2	2	0	5	2	2	0	1	1	0
18:49:00 - 18:50:00	1	5	5	3	2	2	0	0	3	2	0	2	3	0
18:50:00 - 18:51:00	1	5	5	2	3	3	0	2	2	0	0	6	6	1
18:51:00 - 18:52:00	2	1	2	2	2	2	0	0	0	0	0	6	6	1
18:52:00 - 18:53:00	3	1	3	3	2	2	0	0	6	0	0	6	7	1
18:53:00 - 18:54:00	5	5	4	3	2	2	0	3	6	2	0	3	4	0
18:54:00 - 18:55:00	4	4	3	2	3	3	0	0	0	0	0	4	5	0
18:55:00 - 18:56:00	2	4	0	3	3	4	0	1	4	0	0	1	2	0
18:56:00 - 18:57:00	1	3	1	2	2	2	0	1	6	3	0	2	5	0
18:57:00 - 18:58:00	1	2	1	3	3	2	0	1	0	0	0	5	6	0
18:58:00 - 18:59:00	2	4	3	3	2	0	0	1	3	0	0	3	3	0
18:59:00 - 19:00:00	3	4	3	4	3	3	0	2	2	0	0	1	3	1

Date
Saturday 13 July 2019

Weather
Sunny
Temp: 23°C

1100 - 1500 (Saturday INT Peak)

TIME	2a	2b	2c	2d	2e	2f	2g	2h	2i	2j	2k	2l	2m	2n
11:00:00 - 11:01:00	3	6	3	2	4	1	0	3	1	0	0	1	6	0
11:01:00 - 11:02:00	3	2	1	4	4	3	0	4	1	0	0	1	6	0
11:02:00 - 11:03:00	2	4	2	4	4	3	0	4	1	0	0	3	9	0
11:03:00 - 11:04:00	7	2	3	1	0	1	0	1	3	0	0	3	2	0
11:04:00 - 11:05:00	3	4	1	1	2	2	0	1	1	0	1	3	5	0
11:05:00 - 11:06:00	2	6	2	0	2	2	0	2	4	2	0	7	10	1
11:06:00 - 11:07:00	1	6	3	0	0	3	0	4	6	0	0	3	5	1
11:07:00 - 11:08:00	1	5	5	4	2	3	0	3	6	0	0	7	10	3
11:08:00 - 11:09:00	5	6	4	0	0

11:36:00 - 11:37:00	4	4	2	0	0	4	0	1	5	1	0	2	2	0
11:37:00 - 11:38:00	4	5	2	4	1	1	0	2	10	2	0	5	5	0
11:38:00 - 11:39:00	3	6	2	4	4	2	0	2	2	0	0	4	2	0
11:39:00 - 11:40:00	1	4	3	4	4	1	0	3	1	0	0	4	3	1
11:40:00 - 11:41:00	2	6	5	3	2	1	0	4	1	0	0	6	3	1
11:41:00 - 11:42:00	1	6	5	4	3	2	0	4	1	0	0	3	3	0
11:42:00 - 11:43:00	1	1	3	5	5	3	0	1	5	0	0	4	3	0
11:43:00 - 11:44:00	1	2	4	5	5	0	0	3	0	0	0	7	8	1
11:44:00 - 11:45:00	2	2	3	3	1	2	0	4	7	2	1	4	8	2
11:45:00 - 11:46:00	4	1	3	5	2	5	0	2	7	2	0	4	8	2
11:46:00 - 11:47:00	4	2	3	4	3	5	0	3	7	1	0	4	9	1
11:47:00 - 11:48:00	6	4	4	4	3	2	0	1	4	1	0	2	2	0
11:48:00 - 11:49:00	6	10	4	3	2	5	0	0	7	2	0	4	6	0
11:49:00 - 11:50:00	7	5	3	2	2	5	0	3	0	0	0	4	6	0
11:50:00 - 11:51:00	11	10	6	3	2	2	0	3	7	1	0	4	7	0
11:51:00 - 11:52:00	6	5	4	3	2	2	0	2	3	0	0	4	7	0
11:52:00 - 11:53:00	9	7	6	2	2	1	0	2	6	0	0	3	6	0
11:53:00 - 11:54:00	10	11	4	3	4	2	0	3	3	0	0	7	4	1
11:54:00 - 11:55:00	2	3	3	4	6	1	0	0	0	0	0	8	4	1
11:55:00 - 11:56:00	7	6	6	6	6	0	0	0	5	1	0	7	10	2
11:56:00 - 11:57:00	7	6	6	6	6	1	0	1	5	1	0	7	10	2
11:57:00 - 11:58:00	3	2	1	3	3	2	0	6	2	1	0	4	6	2
11:58:00 - 11:59:00	3	4	5	3	2	2	0	7	1	1	0	4	6	2
11:59:00 - 12:00:00	3	6	6	3	3	4	0	7	2	1	0	4	6	0
12:00:00 - 12:01:00	6	9	5	3	3	6	0	3	10	0	0	4	7	2
12:01:00 - 12:02:00	6	9	5	3	3	4	0	2	3	0	0	4	8	2
12:02:00 - 12:03:00	2	3	4	2	2	4	0	4	5	1	0	3	6	3
12:03:00 - 12:04:00	0	6	2	3	3	4	0	4	1	1	0	3	6	3
12:04:00 - 12:05:00	0	6	2	2	1	1	0	1	3	2	0	4	6	1
12:05:00 - 12:06:00	3	6	5	2	1	3	0	6	7	0	0	3	4	1
12:06:00 - 12:07:00	4	10	5	2	1	2	0	6	7	0	0	3	7	1
12:07:00 - 12:08:00	5	9	6	2	2	2	0	6	1	0	0	4	3	3
12:08:00 - 12:09:00	6	8	4	4	5	0	0	2	1	1	0	8	5	2
12:09:00 - 12:10:00	2	5	1	1	0	1	0	6	5	1	1	6	2	2
12:10:00 - 12:11:00	2	5	3	1	1	4	0	2	5	1	0	7	4	4
12:11:00 - 12:12:00	2	6	5	1	0	3	0	2	2	4	0	5	7	2
12:12:00 - 12:13:00	1	1	1	0	1	3	0	1	5	2	0	4	8	2
12:13:00 - 12:14:00	2	4	0	3	2	3	0	4	1	0	0	3	8	2
12:14:00 - 12:15:00	5	7	2	4	3	4	0	4	7	0	0	4	9	1
12:15:00 - 12:16:00	2	6	2	2	2	4	0	5	4	3	0	2	1	1
12:16:00 - 12:17:00	2	0	3	4	4	1	0	2	4	3	0	3	5	2
12:17:00 - 12:18:00	5	9	6	2	3	2	0	2	4	0	0	4	3	0
12:18:00 - 12:19:00	5	9	6	2	3	2	0	1	6	1	0	7	9	1
12:19:00 - 12:20:00	1	11	4	4	3	1	0	2	7	2	0	2	6	0
12:20:00 - 12:21:00	2	2	2	4	3	2	0	1	5	0	0	4	6	2
12:21:00 - 12:22:00	2	3	3	3	2	3	0	3	6	0	0	4	7	0
12:22:00 - 12:23:00	1	5	4	2	0	3	0	5	7	3	0	2	5	2
12:23:00 - 12:24:00	1	6	4	3	3	1	0	2	7	4	0	4	8	5
12:24:00 - 12:25:00	3	4	2	3	2	3	0	4	3	1	0	2	5	2
12:25:00 - 12:26:00	1	5	1	3	2	3	0	1	4	1	0	3	5	3
12:26:00 - 12:27:00	3	5	1	4	4	6	0	2	4	1	0	3	8	4
12:27:00 - 12:28:00	4	3	0	5	4	6	0	4	7	2	0	2	7	2
12:28:00 - 12:29:00	3	1	1	6	5	3	0	3	3	1	0	3	8	2
12:29:00 - 12:30:00	3	3	2	9	5	0	0	3	5	1	0	4	6	1
12:30:00 - 12:31:00	7	1	6	9	5	0	0	2	2	1	1	4	7	1
12:31:00 - 12:32:00	7	6	5	2	2	2	0	3	3	2	0	6	7	2
12:32:00 - 12:33:00	7	8	5	2	3	2	0	5	1	0	0	4	7	0
12:33:00 - 12:34:00	3	2	0	2	2	3	0	7	0	0	0	9	10	0
12:34:00 - 12:35:00	6	9	3	1	1	5	0	7	7	1	0	5	3	2
12:35:00 - 12:36:00	3	6	5	1	2	3	0	0	2	0	0	3	5	2
12:36:00 - 12:37:00	5	6	4	3	1	3	0	1	7	0	0	4	7	2
12:37:00 - 12:38:00	6	9	4	5	2	4	0	3	6	0	0	7	5	1
12:38:00 - 12:39:00	2	1	1	5	4	4	0	6	0	0	0	8	9	1
12:39:00 - 12:40:00	3	5	5	3	1	5	0	7	5	1	0	4	0	1
12:40:00 - 12:41:00	3	5	5	3	2	3	0	0	5	1	0	4	1	1
12:41:00 - 12:42:00	4	6	5	3	2	3	0	1	1	0	0	4	5	1
12:42:00 - 12:43:00	0	0	0	4	4	6	0	2	1	0	0	4	5	1
12:43:00 - 12:44:00	0	2	1	1	2	6	0	6	8	0	0	6	6	2
12:44:00 - 12:45:00	3	5	4	2	2	4	0	5	0	0	0	6	6	2
12:45:00 - 12:46:00	3	5	4	2	2	1	0	5	1	0	0	5	6	0
12:46:00 - 12:47:00	4	4	0	4	2	1	0	1	6	2	0	1	6	0
12:47:00 - 12:48:00	0	6	4	4	2	1	0	2	2	0	0	2	3	0
12:48:00 - 12:49:00	1	7	5	3	1	3	0	2	3	0	0	8	9	1
12:49:00 - 12:50:00	1	6	5	2	1	6	0	4	3	2	0	4	8	1
12:50:00 - 12:51:00	1	3	3	2	2	4	0	3	2	1	0	5	11	1
12:51:00 - 12:52:00	4	9	8	3	3	4	0	3	8	2	0	6	9	0
12:52:00 - 12:53:00	1	6	4	3	4	5	0	4	1	0	0	7	10	2
12:53:00 - 12:54:00	3	7	4	3	4	5	0	4	9	1	0	5	7	1
12:54:00 - 12:55:00	0	2	3	3	5	2	0	1	0	0	0	7	9	2
12:55:00 - 12:56:00	1	5	6	3	4	6	0	2	0	0	0	6	8	2
12:56:00 - 12:57:00	2	6	5	2	2	4	0	6	7	0	0	3	7	0
12:57:00 - 12:58:00	1	1	0	2	4	3	0	3	2	0	0	4	8	0
12:58:00 - 12:59:00	2	5	3	2	3	0	0	3	4	1	0	6	9	0
12:59:00 - 13:00:00	3	7	5	2	1	3	0	5	1	0	0	2	1	2
13:00:00 - 13:01:00	3	9	5	4	4	5	0	4	2	1	0	3	3	0
13:01:00 - 13:02:00	5	9	8	1	0	5	0	4	6	2	0	5	4	2
13:02:00 - 13:03:00	3	9	7	2	3	0	0	5	7	2	0	6	7	2
13:03:00 - 13:04:00	5	7	1	2	3	5	0	5	8	0	0	0	1	0
13:04:00 - 13:05:00	3	2	0	2	3	5	0	3	4	0	0	3	4	1
13:05:00 - 13:06:00	7	3	0	3	2	0	0	3	6	2	0	6	7	1
13:06:00 - 13:07:00	3	7	5	5	2	0	0	4	0	0	0	7	8	1
13:07:00 - 13:08:00	3	7	5	4	3	2	0	3	7	2	0	2	6	0
13:08:00 - 13:09:00	0	6	4	3	4	4	0	5	1	0	0	1	8	0
13:09:00 - 13:10:00	1	6	4	2	3	1	0	5	4	1	0	1	5	0
13:10:00 - 13:11:00	7	9	5	2	1	1	0	2	2	1	0	2	4	1
13:11:00 - 13:12:00	2	0	1	2	1	4	0	3	0	0	0	11	12	2
13:12:00 - 13:13:00	3	5	3	5	2	4	0	4	6	1	0	1	5	1
13:13:00 - 13:14:00	5	6	3	5	4	5	0	1	6	1	0	6	7	2
13:14:00 - 13:15:00	7	9	6	3	2	5	0	1	9	1	0	4	5	0
13:15:00 - 13:16:00	2	4	1	2	1	3	0	2	3	1	0	1	6	2
13:16:00 - 13:17:00	3	4	1	3	2	0	0	3	5	2	0	5	8	2
13:17:00 - 13:18:00	4	3	5	2	2	1	0	3	9	2	0	2	4	2
13:18:00 - 13:19:00	2	6	4	0	0	3	0	2	6	0	0	6	3	1
13:19:00 - 13:20:00	4	9	6	2	4	1	0	4	8	0	0	5	6	1
13:20:00 - 13:21:00	8	3	1	4	5	1	0	5	3	0	0	6	9	2
13:21:00 - 13:22:00	8	3	3	3	2	4	0	7	12	0	0	4	6	4
13:22:00 - 13:23:00	6	6	3	2	2	4	0	6	7	0	0	4	7	4
13:23:00 - 13:24:00	8	6	3	1	3	0	0	7	7	4	0	7	9	0
13:24:00 - 13:25:00	8	6	3	2	4	1	0	3	8	4	0	9	10	0
13:25:00 - 13:26:00	3	4	3	4	3	1	0	4	6	0	0	9	10	1
13:26:00 - 13:27:00	1	9	0	4	3	4	0	5	2	0	0	9	9	2
13:27:00 - 13:28:00	2	9	0	5	2	3	0	6	7	0	0	6	7	0
13:28:00 - 13:29:00	0	9	7	5	2	3	0	2	0	0	0	7	9	0
13:29:00 - 13:30:00	2	9	7	5	3	1	0	2	4	3	0	4	9	0
13:30:00 - 13:31:00	2	1	1	5	2	3	0	2	4	1	0	6	5	0
13:31:00 - 13:32:00	2	2	1	6	3	1	0	1	4	1	0	11	11	0
13:32:00 - 13:33:00	4	7	4	1	2	2	0	2	2	0	0	3	5	2
13:33:00 - 13:34:00	0	2	2	5	4	2	0	1	1	0	0	6	8	2
13:34:00 - 13:35:00	0	4	4	3	0	1	0	2	5	0	0	6	8	2
13:35:00 - 13:36:00	3	4	4	2	0	4	0	4	0	0	0	3	5	1
13:36:00 - 13:37:00	3	4	4	4	3	3	0	4	4	1	0	3	5	1
13:37:00 - 13:38:00	2	6	5	4	3	3	0	2	5	0	0	2	3	1
13:38:00 - 13:39:00	3	5	4	3	1	2	0	1	3	0	0	2	6	0
13:39:00 - 13:40:00	3	7	6	2	3	0	0	4	3	2	0	3	7	1
13:40:00 - 13:41:00	6	8	4	4	3	0	0	5	6	0	0	6	6	2
13:41:00 - 13:42:00	2	3	3	5	3	1	0	10	4	2	0	8	9	2
13:42:00 - 13:43:00	3	5	5	2	2	0	0	10	5	3	0	3	9	0
13:43:00 - 13:44:00	3	6	4	4	2	1	0	4	9	0	0	6	9	0
13:44:00 - 13:45:00	3	6	4	4	3	2	0	0	9	0	0	5	6	0
13:45:00 - 13:46:00	3	4	4	2	3	3	0	1	5	0	0	4	6	0
13:46:00 - 13:47:00	2	1	2	3	2	0	0	3	7	1	0	3	6	1
13:47:00 - 13:48:00	2	3	3	4	3	6	0	3	10	2	0	8	9	2
13:48:00 - 13:49:00	3	7	4	2	0	6	0	3	0	0	0	8	9	3
13:49:00 - 13:50:00	4	7	4	3	2	4	0	5	4	1	0	7	8	4
13:50:00 - 13:51:00	4	6	5	3	2	3	0	2	4	0	0	5	6	0
13:51:00 - 13:52:00	5	6	5	4	3	4	0	2	4	1	0	6	8	0
13:52:00 - 13:53:00	2	6	3	1	0	3	0	2	9	0	0	5	8	0
13:53:00 - 13:54:00	2	5	4	4	3	0	0	2	9	0	0	9	10	0
13:54:00 - 13:55:00	4	6	3	1	0	1	0	3	0	0	0	9	10	0
13:55:00 - 13:56:00	4	6	5	4	2	2	0	4	1	1	0	5	7	1
13:56:00 - 13:57:00	2	5	5	4	2	1	0	1	1	1	0	5	7	0
13:57:00 - 13:58:00	7	4	2	2	0	3	0	2	6	0	0	5	7	1
13:58:00 - 13:59:00	7	4	3	2	2	3	0	0	6	0	0	6	5	2
13:59:00 - 14:00:00	4	1	2	2	0	3	0	0	2	0	0	3	4	0
14:00:00 - 14:01:00	3	5	4	1	0	1	0	2	3	0	0	4	9	0
14:01:00 - 14:02:00	1	6	6	4	3	2	0	1	0	0	0	7	10	0
14:02:00 - 14:03:00	3	7	6	5	4	0	0	1	1	0	0	5	2	0
14:03:00 - 14:04:00	4	5	4	5	4	1	0	3	4	3	0	5	4	1
14:04:00 - 14:05:00	4	7	6	1	0	4	0	1	10	3	0	4	6	1
14:05:00 - 14:06:00	4	6	5	4	4	3	0	2	6	1	0	7	9	2
14:06:00 - 14:07:00	0	7	3	3	2	2	0	1	6	1	0	7	9	2
14:07:00 - 14:08:00	2	7	4	5	1	4	0	3	1	0	1	7	8	1
14:08:00 - 14:09:00	4	5	2	1	0	5	0	5	6	0	0	1	4	0
14:09:00 - 14:10:00	4	5	2	1	2	2	0	2	6	0	0	2	6	1
14:10:00 - 14:11:00	3	6	4	4	1	0	0	2	2	0	0	4	6	3
14:11:00 - 14:12:00	2	2	3	4	1	2	0	1	6	1	0	4	7	2
14:12:00 - 14:13:00	7	6	1	1	4	1	0	3	0	0	0	4	7	2
14:13:00 - 14:14:00	7	6	a	4	3	2	0	4	1	0	0	3	3	1
14:14:00 - 14:15:00	1	3	1	4	5	3	0	2	0	0	0	5	7	1
14:15:00 - 14:16:00	3	6	2	5	5	2	0	3	3	0	0	4	7	0
14:16:00 - 14:17:00	3	2	2	5	4	3	0	5	1	0	0	5	8	0
14:17:00 - 14:18:00	3	5	4	5	4	6	0	3	3	2	0	2	9	2
14:18:00 - 14:19:00	5	7	4	3	2	2	0	5	4	0	0	2	4	1
14:19:00 - 14:20:00	4	5	3	1	2	4	0	1	2	0	0	2	4	2
14:20:00 - 14:21:00	4	5	3	5	3	2	0	2	7	0	0	4	5	0
14:21:00 - 14:22:00	1	3	2	3	2	3	0	3	4	0	0	4	5	1
14:22:00 - 14:23:00	1	3	4	3	4	5	0	1	4	0	0	4	5	1
14:23:00 - 14:24:00	2	4	3	1	2	0	0	5	4	0	0	2	7	0
14:24:00 - 14:25:00	3	4	3	2	3	2	0	6	11	2	0	6	8	1
14:25:00 - 14:26:00	0	4	4	3	2	3	0	2	5	0	0	6	8	2
14:26:00 - 14:27:00	1	4	2	3	3	1	0	2	4	1	0	2	3	1
14:27:00 - 14:28:00	4	6	3	4	3	2	0	3	3	0	0	1	4	0
14:28:00 - 14:29:00	3	6	3	4	3	2	0	2	0	0	0	1	5	0
14:29:00 - 14:30:00	2	3	2	3	2	4	0	2	7	1	0	6	8	2
14:30:00 - 14:31:00	4	0	1	2	4	1	0	4	7	2	0	2	4	1
14:31:00 - 14:32:00	1	2	1	4	5	4	0	2	0	0	0	3	4	0
14:32:00 - 14:33:00	4	4	5	3	2	0	0	2	4	3	0	3	6	1
14:33:00 - 14:34:00	4	4	5	3	2	2	0	2	4	3	0	6	8	2
14:34:00 - 14:35:00	4	1	5	3	0	1	0	2	2	1	0	5	6	0
14:35:00 - 14:36:00	0	2	1	3	0	2	0	2	1	0	0	3	3	0
14:36:00 - 14:37:00	1	3	4	3	2	5	0	3	4	0	0	3	5	1
14:37:00 - 14:38:00	2	8	1	4	2	3	0	3	8	0	0	4	6	0
14:38:00 - 14:39:00	2	8	1	4	5	5	0	1	8	0	0	6	7	0
14:39:00 - 14:40:00	4	2	1	2	1	3	0	2	3	0	0	1	4	0
14:40:00 - 14:41:00	2	3	2	1	0	3	0	2	7	0	0	2	2	1
14:41:00 - 14:42:00	3	4	3	3	2	4	0	1	7	0	0	2	4	1
14:42:00 - 14:43:00	3	4	6	2	1	3	0	1	5	1	1	5	6	1
14:43:00 - 14:44:00	2	5	5	2	3	1	0	3	2	0	0	5	6	1
14:44:00 - 14:45:00	3	6	5	6	4	1	0	3	2	0	0	6	7	0
14:45:00 - 14:46:00	2	5	3	3	2	1	0	4	8	4	1	3	7	0
14:46:00 - 14:47:00	2	5	3	4	3	2	0	3	8	4	0	6	8	0
14:47:00 - 14:48:00	0	8	2	2	1	4	0	4	4	0	0	4	3	0
14:48:00 - 14:49:00	2	8	4	3	3	2	0	3	5	0	0	6	5	0
14:49:00 - 14:50:00	2	4	3	2	1	2	0	3	1	0	0	3	5	1
14:50:00 - 14:51:00	3	6	1	1	2	5	0	2	1	0	0	1	2	0
14:51:00 - 14:52:00	3	6	1	2	1	3	0	2	3	1	1	7	8	2
14:52:00 - 14:53:00	3	5	3	4	3	1	0	4	7	3	0	4	6	2
14:53:00 - 14:54:00	3	4	2	2	3	2	0	1	7	0	0	4	6	2
14:54:00 - 14:55:00	3	5	4	6	4	1	0	1	7	0	0	6	7	1
14:55:00 - 14:56:00	5	7	6	2	1	2	0	1	4	3	0	6	7	3
14:56:00 - 14:57:00	5	7	6	3	2	3	0	2	4	3	0	7	9	3
14:57:00 - 14:58:00	2	9	7	2	2	3	0	4	2	1	0	3	2	0
14:58:00 - 14:59:00	2	9	7	3	3	1	0	1	3	1	0	8	9	0
14:59:00 - 15:00:00	3	9	7	2	3	2	0	4	2	2	0	1	2	0

Hillingdon, Middlesex
Queue Length Survey

Site 3 of 4
A408 High Street (South)
Tesco Super Market Access
A408 High Street (North)

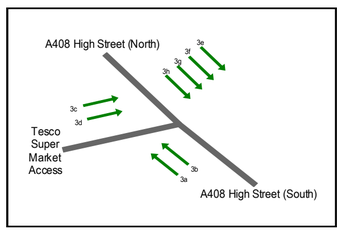

Lat/Long
lat 51.515953° lon -0.475883°

Date
Thursday 11 July 2019

Weather
Sunny Intervals
Temp: 8°C

0700 - 1000 (Thursday AM Peak)

TIME	3a	3b	3c	3d	3e	3f	3g	3h
07:00:00 - 07:01:00	0	0	0	0	1	0	0	0
07:01:00 - 07:02:00	2	1	0	0	1	0	0	0
07:02:00 - 07:03:00	0	0	0	1	4	2	1	0
07:03:00 - 07:04:00	0	0	0	0	0	0	0	0
07:04:00 - 07:05:00	1	0	0	0	2	3	0	1
07:05:00 - 07:06:00	3	1	0	0	0	0	0	0
07:06:00 - 07:07:00	0	0	0	0	0	0	0	0
07:07:00 - 07:08:00	4	0	0	0	8	5	0	0
07:08:00 - 07:09:00	2	1	1	0	4	1	0	0
07:09:00 - 07:10:00	0	0	0	2	0	0	0	0
07:10:00 - 07:11:00	3	3	0	2	2	1	0	0
07:11:00 - 07:12:00	1	1	0	0	4	2	3	0
07:12:00 - 07:13:00	1	1	1	0	0	0	0	0
07:13:00 - 07:14:00	3	1	1	0	2	4	0	0
07:14:00 - 07:15:00	1	0	3	1	3	0	0	0
07:15:00 - 07:16:00	1	0	0	0	5	2	0	1
07:16:00 - 07:17:00	1	5	0	1	5	0	3	0
07:17:00 - 07:18:00	3	4	0	1	6	1	0	0
07:18:00 - 07:19:00	4	6	0	0	6	1	0	0
07:19:00 - 07:20:00	0	1	0	1	1	3	0	0
07:20:00 - 07:21:00	0	1	0	1	1	0	1	0
07:21:00 - 07:22:00	2	1	0	1	3	0	1	0
07:22:00 - 07:23:00	2	0	0	2	3	4	1	0
07:23:00 - 07:24:00	0	0	0	0	3	2	0	0
07:24:00 - 07:25:00	1	0	0	1	3	5	0	0
07:25:00 - 07:26:00	1	2	1	2	1	1	0	0
07:26:00 - 07:27:00	0	0	0	0	0	0	0	0
07:27:00 - 07:28:00	3	3	3	0	1	2	0	1
07:28:00 - 07:29:00	1	1	3	0	0	1	0	0
07:29:00 - 07:30:00	0	0	1	0	4	4	0	0
07:30:00 - 07:31:00	1	1	1	0	3	5	0	0
07:31:00 - 07:32:00	0	0	0	2	1	2	0	0
07:32:00 - 07:33:00	0	0	0	1	0	0	0	0
07:33:00 - 07:34:00	1	1	1	2	8	3	0	0
07:34:00 - 07:35:00	2	3	1	5	4	4	2	2
07:35:00 - 07:36:00	2	3	2	2	0	0	0	1
07:36:00 - 07:37:00	1	0	2	2	5	1	0	0
07:37:00 - 07:38:00	3	5	0	3	4	0	1	0
07:38:00 - 07:39:00	3	5	1	1	0	0	0	1
07:39:00 - 07:40:00	1	0	1	1	0	2	0	0
07:40:00 - 07:41:00	5	2	0	8	1	0	0	0
07:41:00 - 07:42:00	5	3	2	2	2	0	0	0
07:42:00 - 07:43:00	4	1	2	2	3	3	0	0
07:43:00 - 07:44:00	2	2	0	1	3	2	0	0
07:44:00 - 07:45:00	6	7	0	0	4	3	0	0
07:45:00 - 07:46:00	7	2	1	2	6	8	0	0
07:46:00 - 07:47:00	1	0	1	1	6	8	0	0
07:47:00 - 07:48:00	4	6	1	1	3	5	0	0
07:48:00 - 07:49:00	0	0	2	2	6	4	2	2
07:49:00 - 07:50:00	0	0	2	1	1	0	0	2
07:50:00 - 07:51:00	2	2	2	1	3	3	0	0
07:51:00 - 07:52:00	2	4	3	1	4	2	1	0
07:52:00 - 07:53:00	0	0	1	0	0	3	0	0
07:53:00 - 07:54:00	3	1	2	1	3	4	2	0
07:54:00 - 07:55:00	1	1	0	2	6	5	0	0
07:55:00 - 07:56:00	0	0	2	1	0	0	0	0
07:56:00 - 07:57:00	7	5	2	1	3	2	1	0
07:57:00 - 07:58:00	4	3	0	1	3	3	0	0
07:58:00 - 07:59:00	4	5	2	0	0	0	0	0
07:59:00 - 08:00:00	5	5	2	0	0	1	0	0
08:00:00 - 08:01:00	1	3	1	2	6	2	1	0
08:01:00 - 08:02:00	3	5	2	4	7	4	1	2
08:02:00 - 08:03:00	1	0	2	4	3	2	0	0
08:03:00 - 08:04:00	0	1	0	0	5	4	0	0
08:04:00 - 08:05:00	1	2	1	1	5	4	0	0
08:05:00 - 08:06:00	1	0	1	1	2	2	0	0
08:06:00 - 08:07:00	1	2	0	1	4	1	0	0
08:07:00 - 08:08:00	1	2	2	0	0	2	0	0
08:08:00 - 08:09:00	2	6	2	1	9	6	0	0
08:09:00 - 08:10:00	3	2	2	1	9	6	0	0
08:10:00 - 08:11:00	6	7	2	1	4	1	0	0
08:11:00 - 08:12:00	5	3	1	2	6	7	0	0
08:12:00 - 08:13:00	0	0	0	0	0	0	0	0
08:13:00 - 08:14:00	7	8	1	0	1	0	1	1
08:14:00 - 08:15:00	1	1	3	0	2	2	1	0
08:15:00 - 08:16:00	0	0	2	1	0	0	0	0
08:16:00 - 08:17:00	1	1	2	1	1	2	0	0
08:17:00 - 08:18:00	0	1	3	2	4	4	1	3
08:18:00 - 08:19:00	1	1	1	1	0	0	0	2
08:19:00 - 08:20:00	7	7	1	1	7	5	0	0
08:20:00 - 08:21:00	6	7	0	1	4	0	1	0
08:21:00 - 08:22:00	6	7	0	1	4	2	1	0
08:22:00 - 08:23:00	3	3	1	1	5	3	2	0
08:23:00 - 08:24:00	3	3	2	1	8	2	0	0
08:24:00 - 08:25:00	6	5	0	1	11	2	0	0
08:25:00 - 08:26:00	3	3	0	1	6	3	2	2
08:26:00 - 08:27:00	4	1	1	1	2	2	1	1
08:27:00 - 08:28:00	6	1	2	3	7	5	1	0
08:28:00 - 08:29:00	1	1	2	3	4	3	1	0
08:29:00 - 08:30:00	0	0	2	1	5	2	0	0
08:30:00 - 08:31:00	0	1	1	0	5	2	0	0
08:31:00 - 08:32:00	1	0	2	1	9	6	0	0
08:32:00 - 08:33:00	1	0	2	3	0	0	0	1
08:33:00 - 08:34:00	2	0	0	2	3	3	2	0
08:34:00 - 08:35:00	3	4	1	1	0	4	3	0
08:35:00 - 08:36:00	0	0	2	2	1	0	0	0
08:36:00 - 08:37:00	3	4	2	2	6	5	2	0
08:37:00 - 08:38:00	4	4	1	1	7	3	2	0
08:38:00 - 08:39:00	0	0	0	2	7	3	2	0
08:39:00 - 08:40:00	7	7	2	2	1	0	0	0
08:40:00 - 08:41:00	3	5	1	2	0	0	0	0
08:41:00 - 08:42:00	0	0	1	2	6	2	2	3
08:42:00 - 08:43:00	2	2	1	2	7	4	0	0
08:43:00 - 08:44:00	6	8	0	0	4	2	0	0
08:44:00 - 08:45:00	6	8	2	1	4	2	0	0
08:45:00 - 08:46:00	5	4	2	1	9	7	0	0
08:46:00 - 08:47:00	1	0	1	1	5	4	1	0
08:47:00 - 08:48:00	1	0	2	1	5	4	1	0
08:48:00 - 08:49:00	2	2	2	2	1	2	0	0
08:49:00 - 08:50:00	3	3	1	2	1	2	0	0
08:50:00 - 08:51:00	4	5	1	1	6	5	1	0
08:51:00 - 08:52:00	5	4	1	2	5	3	0	0
08:52:00 - 08:53:00	4	6	2	2	0	0	0	0
08:53:00 - 08:54:00	7	9	0	1	5	0	3	2
08:54:00 - 08:55:00	4	3	2	1	6	3	3	0
08:55:00 - 08:56:00	0	0	1	2	6	3	3	0
08:56:00 - 08:57:00	1	1	1	2	7	4	1	1
08:57:00 - 08:58:00	8	6	1	1	4	0	2	3
08:58:00 - 08:59:00	0	0	1	1	2	0	0	0
08:59:00 - 09:00:00	2	2	2	0	3	4	1	0
09:00:00 - 09:01:00	5	2	3	1	4	3	3	0
09:01:00 - 09:02:00	0	0	1	1	0	0	0	2
09:02:00 - 09:03:00	6	4	2	1	4	0	2	0
09:03:00 - 09:04:00	7	6	2	2	1	3	1	1
09:04:00 - 09:05:00	0	0	0	0	0	0	0	1
09:05:00 - 09:06:00	2	5	5	2	12	1	0	0
09:06:00 - 09:07:00	6	3	5	2	4	1	0	0
09:07:00 - 09:08:00	6	4	1	3	0	0	0	0
09:08:00 - 09:09:00	7	8	1	3	10	1	1	0
09:09:00 - 09:10:00	2	1	4	2	1	1	1	0
09:10:00 - 09:11:00	3	2	1	1	0	0	0	0
09:11:00 - 09:12:00	2	2	1	1	7	5	2	0
09:12:00 - 09:13:00	1	2	0	4	2	1	1	0
09:13:00 - 09:14:00	1	2	1	3	2	1	2	0
09:14:00 - 09:15:00	3	0	1	3	9	6	2	0
09:15:00 - 09:16:00	0	0	0	1	4	2	1	2
09:16:00 - 09:17:00	3	1	1	3	3	2	2	1
09:17:00 - 09:18:00	2	5	1	3	3	1	1	2
09:18:00 - 09:19:00	1	0	0	1	0	0	0	2
09:19:00 - 09:20:00	3	1	1	0	2	1	2	1
09:20:00 - 09:21:00	0	6	1	0	5	2	0	0
09:21:00 - 09:22:00	0	0	1	2	0	1	0	0
09:22:00 - 09:23:00	4	3	1	2	2	1	0	0
09:23:00 - 09:24:00	5	4	0	1	2	2	1	0
09:24:00 - 09:25:00	0	0	1	2	0	2	0	2
09:25:00 - 09:26:00	8	7	1	2	1	5	0	0
09:26:00 - 09:27:00	3	5	2	1	0	0	0	0
09:27:00 - 09:28:00	0	0	2	3	1	0	0	1
09:28:00 - 09:29:00	2	2	2	3	2	1	0	0
09:29:00 - 09:30:00	3	3	1	2	3	0	0	0
09:30:00 - 09:31:00	3	3	2	2	0	0	0	0
09:31:00 - 09:32:00	3	3	2	2	2	1	0	1
09:32:00 - 09:33:00	0	2	0	0	2	0	1	0
09:33:00 - 09:34:00	0	2	3	3	2	0	1	0
09:34:00 - 09:35:00	0	1	3	3	4	1	1	0
09:35:00 - 09:36:00	2	1	1	2	3	1	0	0
09:36:00 - 09:37:00	2	2	0	0	5	3	0	0
09:37:00 - 09:38:00	1	0	0	0	4	0	0	0
09:38:00 - 09:39:00	0	1	0	3	2	2	1	0
09:39:00 - 09:40:00	1	1	2	3	9	8	1	0
09:40:00 - 09:41:00	1	1	2	3	6	0	1	1
09:41:00 - 09:42:00	1	1	2	2	3	1	0	0
09:42:00 - 09:43:00	1	1	1	3	4	1	1	0
09:43:00 - 09:44:00	2	0	1	3	2	4	0	0
09:44:00 - 09:45:00	0	0	2	0	3	1	0	0
09:45:00 - 09:46:00	3	0	2	0	5	1	0	2
09:46:00 - 09:47:00	6	3	0	0	2	3	1	1
09:47:00 - 09:48:00	0	0	0	1	0	0	0	1
09:48:00 - 09:49:00	0	0	0	1	0	0	1	1
09:49:00 - 09:50:00	1	0	1	1	0	2	1	0
09:50:00 - 09:51:00	0	0	1	1	0	0	0	0
09:51:00 - 09:52:00	1	0	1	1	0	0	0	0
09:52:00 - 09:53:00	4	3	1	5	8	6	0	0
09:53:00 - 09:54:00	0	0	1	5	8	6	1	0
09:54:00 - 09:55:00	2	3	1	5	3	2	0	0
09:55:00 - 09:56:00	1	1	1	1	4	2	2	0
09:56:00 - 09:57:00	1	4	0	5	4	2	2	2
09:57:00 - 09:58:00	4	2	1	5	4	7	0	0
09:58:00 - 09:59:00	3	4	0	2	3	3	0	0
09:59:00 - 10:00:00	9	8	1	0	4	3	0	0

Date
Thursday 11 July 2019

Weather
Sunny
Temp: 21°C

1500 - 1900 (Thursday PM Peak)

TIME	3a	3b	3c	3d	3e	3f	3g	3h
15:00:00 - 15:01:00	0	0	1	3	3	4	1	0
15:01:00 - 15:02:00	5	4	1	3	6	5	3	2
15:02:00 - 15:03:00	1	1	1	1	5	4	1	0
15:03:00 - 15:04:00	4	3	1	3	5	4	1	0
15:04:00 - 15:05:00	6	4	1	0	6	0	0	0
15:05:00 - 15:06:00	3	2	1	1	2	2	1	0
15:06:00 - 15:07:00	3	1	1	4	1	1	0	0
15:07:00 - 15:08:00	6	6	0	2	5	4	2	0
15:08:00 - 15:09:00	8	9	0	2	6	2	1	1
15:09:00 - 15:10:00	8	4	3	1	3	1	1	1
15:10:00 - 15:11:00	8	7	1	4	6	5	1	1
15:11:00 - 15:12:00	1	2	1	4	7	4	2	2
15:12:00 - 15:13:00	1	1	0	3	7	4	2	0
15:13:00 - 15:14:00	1	3	0	2	5	4	1	0
15:14:00 - 15:15:00	2	3	0	2	4	4	2	0
15:15:00 - 15:16:00	4	1	0	4	3	4	0	0
15:16:00 - 15:17:00	4	1	3	3	3	4	1	0
15:17:00 - 15:18:00	5	5	3	3	6	4	2	0
15:18:00 - 15:19:00	5	6	1	1	9	5	1	0
15:19:00 - 15:20:00	5	6	2	2	9	5	1	0
15:20:00 - 15:21:00	5	5	3	2	6	5	1	0
15:21:00 - 15:22:00	7	4	0	2	5	6	1	0
15:22:00 - 15:23:00	5	3	0	3	5	6	1	1
15:23:00 - 15:24:00	7	5	0	3	6	7	0	0
15:24:00 - 15:25:00	6	2	1	2	8	6	0	0
15:25:00 - 15:26:00	1	1	1	1	8	6	0	0
15:26:00 - 15:27:00	2	3	0	0	5	2	0	0
15:27:00 - 15:28:00	3	5	3	2	9	7	1	0
15:28:00 - 15:29:00	1	3	0	3	2	1	0	0
15:29:00 - 15:30:00	6	5	2	1	5	2	1	0
15:30:00 - 15:31:00	6	8	2	1	4	1	3	0
15:31:00 - 15:32:00	1	3	3	0	4	2	1	3
15:32:00 - 15:33:00	1	4	1	3	7	5	2	0
15:33:00 - 15:34:00	3	5	1	3	7	4	1	0
15:34:00 - 15:35:00	2	2	4	2	3	4	0	0

15:35:00 - 15:36:00	5	7	1	3	3	4	0	0
15:36:00 - 15:37:00	0	1	1	3	2	3	1	0
15:37:00 - 15:38:00	2	3	0	3	2	2	1	0
15:38:00 - 15:39:00	2	3	2	4	2	3	0	0
15:39:00 - 15:40:00	5	6	2	4	4	3	2	0
15:40:00 - 15:41:00	4	6	2	2	2	0	2	0
15:41:00 - 15:42:00	3	4	1	0	4	2	2	2
15:42:00 - 15:43:00	3	4	0	1	3	3	0	0
15:43:00 - 15:44:00	2	0	1	5	10	4	3	0
15:44:00 - 15:45:00	2	1	2	4	10	4	3	2
15:45:00 - 15:46:00	4	3	2	4	3	0	3	1
15:46:00 - 15:47:00	5	1	6	4	3	0	1	1
15:47:00 - 15:48:00	4	2	0	6	2	2	0	0
15:48:00 - 15:49:00	7	5	1	4	2	4	1	0
15:49:00 - 15:50:00	5	6	1	4	6	5	2	0
15:50:00 - 15:51:00	1	0	1	3	6	5	2	3
15:51:00 - 15:52:00	1	4	1	2	3	5	0	0
15:52:00 - 15:53:00	3	1	1	2	5	3	0	0
15:53:00 - 15:54:00	3	0	0	2	1	4	0	0
15:54:00 - 15:55:00	3	0	2	5	1	5	0	0
15:55:00 - 15:56:00	8	6	2	5	4	1	0	0
15:56:00 - 15:57:00	6	4	0	2	4	5	2	0
15:57:00 - 15:58:00	6	5	0	7	9	8	2	0
15:58:00 - 15:59:00	5	7	1	7	6	2	0	0
15:59:00 - 16:00:00	3	4	0	4	6	2	0	0
16:00:00 - 16:01:00	4	5	0	2	6	5	1	0
16:01:00 - 16:02:00	2	1	0	1	5	3	2	2
16:02:00 - 16:03:00	6	3	1	1	4	1	3	0
16:03:00 - 16:04:00	4	3	2	5	1	1	0	3
16:04:00 - 16:05:00	8	6	2	5	6	4	1	0
16:05:00 - 16:06:00	5	8	2	3	5	3	1	0
16:06:00 - 16:07:00	0	0	2	6	5	3	1	0
16:07:00 - 16:08:00	7	6	2	6	2	1	0	0
16:08:00 - 16:09:00	8	5	1	1	2	1	0	0
16:09:00 - 16:10:00	8	5	2	0	3	2	0	0
16:10:00 - 16:11:00	4	6	2	0	5	3	2	2
16:11:00 - 16:12:00	5	2	2	4	8	4	0	0
16:12:00 - 16:13:00	5	2	3	2	7	4	0	0
16:13:00 - 16:14:00	5	7	3	2	3	2	1	0
16:14:00 - 16:15:00	6	7	1	2	2	1	0	0
16:15:00 - 16:16:00	6	7	1	2	2	1	0	0
16:16:00 - 16:17:00	10	10	1	2	1	2	1	1
16:17:00 - 16:18:00	1	1	1	1	5	3	0	0
16:18:00 - 16:19:00	5	5	3	1	8	7	0	0
16:19:00 - 16:20:00	6	5	3	2	5	4	2	2
16:20:00 - 16:21:00	0	1	4	5	3	1	1	2
16:21:00 - 16:22:00	1	2	0	5	7	6	1	3
16:22:00 - 16:23:00	4	5	2	5	7	3	0	0
16:23:00 - 16:24:00	0	0	2	4	1	0	0	0
16:24:00 - 16:25:00	6	5	0	0	5	4	0	0
16:25:00 - 16:26:00	7	4	0	0	4	5	0	0
16:26:00 - 16:27:00	1	1	2	0	4	6	0	0
16:27:00 - 16:28:00	5	3	4	6	4	1	4	0
16:28:00 - 16:29:00	8	7	4	6	3	1	1	0
16:29:00 - 16:30:00	0	0	1	3	2	0	1	3
16:30:00 - 16:31:00	7	6	1	3	9	8	1	0
16:31:00 - 16:32:00	4	4	1	3	3	2	2	0
16:32:00 - 16:33:00	0	0	5	0	1	0	5	0
16:33:00 - 16:34:00	5	5	5	2	5	2	4	0
16:34:00 - 16:35:00	7	9	2	2	2	0	0	0
16:35:00 - 16:36:00	7	9	0	3	0	0	0	3
16:36:00 - 16:37:00	1	4	0	3	7	4	0	1
16:37:00 - 16:38:00	3	1	1	2	6	3	0	0
16:38:00 - 16:39:00	5	5	1	1	6	3	1	0
16:39:00 - 16:40:00	5	7	1	1	4	0	0	0
16:40:00 - 16:41:00	3	2	0	0	2	1	0	0
16:41:00 - 16:42:00	6	5	2	5	5	4	3	0
16:42:00 - 16:43:00	4	3	2	5	1	2	4	3
16:43:00 - 16:44:00	3	0	2	2	1	2	0	3
16:44:00 - 16:45:00	3	0	0	2	1	2	0	1
16:45:00 - 16:46:00	4	2	0	4	2	2	0	0
16:46:00 - 16:47:00	2	2	0	2	3	1	0	0
16:47:00 - 16:48:00	3	5	0	1	7	4	0	0
16:48:00 - 16:49:00	5	4	1	5	7	3	0	0
16:49:00 - 16:50:00	0	0	3	4	1	0	0	0
16:50:00 - 16:51:00	6	7	3	4	6	4	3	0
16:51:00 - 16:52:00	1	1	2	5	2	5	1	2
16:52:00 - 16:53:00	1	0	5	7	7	9	2	0
16:53:00 - 16:54:00	4	3	5	7	3	4	2	2
16:54:00 - 16:55:00	5	4	2	2	5	4	2	0
16:55:00 - 16:56:00	5	4	3	5	7	6	3	2
16:56:00 - 16:57:00	1	4	3	5	7	5	2	0
16:57:00 - 16:58:00	4	3	1	3	6	0	1	0
16:58:00 - 16:59:00	4	4	3	4	7	1	1	0
16:59:00 - 17:00:00	5	7	3	4	7	2	4	0
17:00:00 - 17:01:00	0	0	2	0	2	2	0	2
17:01:00 - 17:02:00	1	0	2	0	6	4	2	0
17:02:00 - 17:03:00	1	1	2	2	7	6	0	0
17:03:00 - 17:04:00	1	3	2	2	6	0	3	3
17:04:00 - 17:05:00	3	4	2	9	7	1	1	0
17:05:00 - 17:06:00	7	5	2	9	6	2	0	0
17:06:00 - 17:07:00	2	1	3	3	3	2	3	1
17:07:00 - 17:08:00	4	2	0	4	6	5	4	4
17:08:00 - 17:09:00	6	6	0	4	3	2	3	2
17:09:00 - 17:10:00	3	1	1	2	3	2	1	0
17:10:00 - 17:11:00	10	9	2	1	3	2	2	0
17:11:00 - 17:12:00	6	8	2	1	7	6	3	0
17:12:00 - 17:13:00	2	1	2	3	7	6	3	2
17:13:00 - 17:14:00	3	2	2	3	5	3	2	0
17:14:00 - 17:15:00	5	7	1	3	7	6	3	0
17:15:00 - 17:16:00	0	0	1	5	3	2	1	0
17:16:00 - 17:17:00	6	6	1	5	2	2	2	0
17:17:00 - 17:18:00	4	6	1	3	3	2	1	0
17:18:00 - 17:19:00	4	6	5	4	3	2	1	2
17:19:00 - 17:20:00	6	4	5	4	4	2	1	0
17:20:00 - 17:21:00	1	0	0	3	2	1	0	0
17:21:00 - 17:22:00	1	0	1	9	2	1	0	0
17:22:00 - 17:23:00	5	6	1	9	6	4	2	0
17:23:00 - 17:24:00	4	3	3	3	4	3	0	0
17:24:00 - 17:25:00	4	3	2	2	3	2	0	0
17:25:00 - 17:26:00	5	3	2	2	6	3	2	0
17:26:00 - 17:27:00	2	3	3	1	5	2	1	0
17:27:00 - 17:28:00	7	5	3	1	6	5	3	0
17:28:00 - 17:29:00	4	5	1	6	7	3	4	0
17:29:00 - 17:30:00	4	1	2	1	3	2	0	2
17:30:00 - 17:31:00	7	5	1	4	4	5	0	0
17:31:00 - 17:32:00	6	6	1	4	3	2	3	3
17:32:00 - 17:33:00	0	0	1	4	2	1	0	3
17:33:00 - 17:34:00	1	1	0	1	5	4	0	1
17:34:00 - 17:35:00	4	2	1	5	4	2	1	0
17:35:00 - 17:36:00	4	0	3	8	2	0	0	0
17:36:00 - 17:37:00	6	3	3	8	6	4	1	1
17:37:00 - 17:38:00	6	7	2	5	7	3	2	0
17:38:00 - 17:39:00	6	7	2	0	3	2	0	0
17:39:00 - 17:40:00	8	5	2	0	5	4	0	0
17:40:00 - 17:41:00	4	6	3	2	6	1	0	0
17:41:00 - 17:42:00	6	10	3	1	5	1	0	1
17:42:00 - 17:43:00	1	3	3	1	6	4	3	0
17:43:00 - 17:44:00	3	7	4	2	5	4	3	2
17:44:00 - 17:45:00	5	7	2	3	4	3	0	0
17:45:00 - 17:46:00	4	5	2	3	5	4	1	0
17:46:00 - 17:47:00	2	2	1	1	1	2	2	0
17:47:00 - 17:48:00	3	3	4	4	2	2	0	0
17:48:00 - 17:49:00	1	0	4	4	2	1	2	0
17:49:00 - 17:50:00	0	2	0	6	7	3	0	0
17:50:00 - 17:51:00	2	6	7	6	7	5	1	3
17:51:00 - 17:52:00	6	7	7	6	3	2	3	0
17:52:00 - 17:53:00	2	3	4	3	2	2	0	0
17:53:00 - 17:54:00	6	6	0	2	2	3	0	0
17:54:00 - 17:55:00	6	7	1	2	4	4	0	0
17:55:00 - 17:56:00	1	1	0	6	1	0	0	0
17:56:00 - 17:57:00	6	6	2	2	4	3	2	0
17:57:00 - 17:58:00	7	6	4	2	5	2	1	0
17:58:00 - 17:59:00	0	0	2	3	2	1	0	0
17:59:00 - 18:00:00	5	1	4	2	4	0	2	0
18:00:00 - 18:01:00	5	2	4	2	2	2	0	0
18:01:00 - 18:02:00	5	2	3	2	0	1	0	0
18:02:00 - 18:03:00	3	3	3	2	4	2	0	0
18:03:00 - 18:04:00	8	3	5	0	2	1	0	0
18:04:00 - 18:05:00	8	7	2	3	2	0	0	0
18:05:00 - 18:06:00	1	0	2	3	6	3	2	3
18:06:00 - 18:07:00	5	2	0	2	2	2	1	3
18:07:00 - 18:08:00	6	4	3	0	4	2	3	0
18:08:00 - 18:09:00	6	7	3	1	2	2	6	4
18:09:00 - 18:10:00	6	7	0	4	3	2	0	4
18:10:00 - 18:11:00	6	7	0	2	0	0	0	2
18:11:00 - 18:12:00	4	4	0	2	6	4	3	1
18:12:00 - 18:13:00	4	4	5	3	2	1	2	0
18:13:00 - 18:14:00	5	6	2	1	2	3	2	2
18:14:00 - 18:15:00	7	5	2	1	5	3	2	0
18:15:00 - 18:16:00	2	0	2	2	5	3	2	0
18:16:00 - 18:17:00	6	6	1	3	4	3	0	3
18:17:00 - 18:18:00	4	2	1	3	4	3	2	0
18:18:00 - 18:19:00	0	0	5	2	4	3	2	0
18:19:00 - 18:20:00	4	2	3	2	4	2	1	0
18:20:00 - 18:21:00	3	4	3	2	4	1	0	0
18:21:00 - 18:22:00	0	0	4	1	1	1	1	0
18:22:00 - 18:23:00	4	4	4	1	4	2	3	0
18:23:00 - 18:24:00	5	4	2	2	5	4	3	0
18:24:00 - 18:25:00	5	4	0	6	4	3	2	0
18:25:00 - 18:26:00	7	5	2	6	7	6	4	4
18:26:00 - 18:27:00	0	1	2	7	4	3	1	0
18:27:00 - 18:28:00	0	1	5	0	4	3	1	0
18:28:00 - 18:29:00	3	7	5	0	6	5	1	0
18:29:00 - 18:30:00	4	5	1	4	6	3	0	0
18:30:00 - 18:31:00	4	5	0	2	6	4	0	0
18:31:00 - 18:32:00	6	8	0	2	4	2	2	2
18:32:00 - 18:33:00	1	1	2	2	2	0	0	0
18:33:00 - 18:34:00	1	2	3	1	2	2	0	1
18:34:00 - 18:35:00	3	4	3	2	6	5	1	0
18:35:00 - 18:36:00	2	2	4	1	1	2	0	0
18:36:00 - 18:37:00	5	2	2	0	4	3	0	0
18:37:00 - 18:38:00	4	5	2	2	6	5	2	0
18:38:00 - 18:39:00	3	4	2	4	6	4	2	2
18:39:00 - 18:40:00	4	5	1	2	5	4	0	0
18:40:00 - 18:41:00	7	5	2	3	3	1	1	2
18:41:00 - 18:42:00	0	1	4	4	4	1	0	1
18:42:00 - 18:43:00	6	4	2	1	4	2	0	0
18:43:00 - 18:44:00	3	0	2	3	4	2	3	2
18:44:00 - 18:45:00	3	1	1	3	3	2	1	0
18:45:00 - 18:46:00	3	6	1	3	4	2	1	0
18:46:00 - 18:47:00	4	3	5	2	2	0	0	0
18:47:00 - 18:48:00	4	3	2	2	2	0	0	0
18:48:00 - 18:49:00	6	5	2	2	1	1	1	1
18:49:00 - 18:50:00	6	5	2	3	1	3	1	0
18:50:00 - 18:51:00	6	5	3	2	1	0	1	1
18:51:00 - 18:52:00	7	8	3	2	5	3	1	0
18:52:00 - 18:53:00	3	2	2	3	6	3	0	0
18:53:00 - 18:54:00	6	4	1	7	6	3	0	0
18:54:00 - 18:55:00	5	4	1	7	4	0	0	0
18:55:00 - 18:56:00	2	1	5	2	3	2	1	0
18:56:00 - 18:57:00	5	4	2	2	3	2	1	0
18:57:00 - 18:58:00	5	2	2	2	6	2	1	0
18:58:00 - 18:59:00	2	2	1	4	6	2	1	0
18:59:00 - 19:00:00	4	3	1	1	6	1	1	3

Date
Saturday 13 July 2019

Weather
Sunny
Temp: 23°C

1100 - 1500 (Saturday INT Peak)

TIME	3a	3b	3c	3d	3e	3f	3g	3h
11:00:00 - 11:01:00	4	5	2	3	7	2	1	0
11:01:00 - 11:02:00	8	5	1	3	4	7	3	0
11:02:00 - 11:03:00	0	0	1	2	4	7	3	0
11:03:00 - 11:04:00	4	4	0	3	2	1	0	0
11:04:00 - 11:05:00	4	3	0	3	4	5	3	0
11:05:00 - 11:06:00	4	3	5	2	1	0	2	0
11:06:00 - 11:07:00	6	3	1	6	6	5	4	0
11:07:00 - 11:08:00	5	7	1	6	4	3	1	0
11:08:00 - 11:09:00	0	0	1	5	4	1	1	0
11:09:00 - 11:10:00	2	0	2	4	4	1	2	0
11:10:00 - 11:11:00	0	0	2	4	5	1	0	0
11:11:00 - 11:12:00	5	4	1	5	1	1	2	0
11:12:00 - 11:13:00	8	5	2	7	1	1	2	1
11:13:00 - 11:14:00	6	6	2	7	3	1	2	1
11:14:00 - 11:15:00	4	4	3	4	6	4	1	0
11:15:00 - 11:16:00	6	5	2	2	8	7	4	0
11:16:00 - 11:17:00	4	3	2	2	6	4	0	0
11:17:00 - 11:18:00	2	1	3	6	2	1	1	1
11:18:00 - 11:19:00	2	1	0	1	2	0	0	0
11:19:00 - 11:20:00	4	4	1	3	4	3	0	0
11:20:00 - 11:21:00	6	8	5	4	3	2	2	2
11:21:00 - 11:22:00	6	6	3	4	2	2	0	3
11:22:00 - 11:23:00	4	5	3	4	5	5	3	2
11:23:00 - 11:24:00	4	5	4	1	0	2	2	2
11:24:00 - 11:25:00	2	0	4	6	0	0	1	2
11:25:00 - 11:26:00	7	5	3	1	1	0	1	1
11:26:00 - 11:27:00	8	6	3	6	4	5	4	0
11:27:00 - 11:28:00	2	1	3	0	6	5	2	2
11:28:00 - 11:29:00	3	2	1	6	4	3	4	4
11:29:00 - 11:30:00	5	2	1	6	7	5	2	0
11:30:00 - 11:31:00	4	3	3	1	3	1	2	3
11:31:00 - 11:32:00	7	5	7	4	3	4	2	0
11:32:00 - 11:33:00	7	2	7	4	7	5	0	0
11:33:00 - 11:34:00	2	1	3	1	5	4	3	1
11:34:00 - 11:35:00	5	3	2	3	5	4	3	3
11:35:00 - 11:36:00	2	0	2	3	6	3	0	0

11:36:00 - 11:37:00	3	1	0	6	3	2	0	0
11:37:00 - 11:38:00	4	1	0	4	1	0	4	1
11:38:00 - 11:39:00	2	1	1	4	4	2	1	0
11:39:00 - 11:40:00	6	9	3	1	9	5	3	0
11:40:00 - 11:41:00	6	9	4	1	9	5	3	3
11:41:00 - 11:42:00	2	7	4	3	6	4	3	0
11:42:00 - 11:43:00	6	6	2	3	4	1	0	0
11:43:00 - 11:44:00	0	0	7	4	6	5	2	2
11:44:00 - 11:45:00	6	6	7	4	4	3	2	2
11:45:00 - 11:46:00	6	7	2	5	6	6	4	0
11:46:00 - 11:47:00	2	2	3	1	6	6	4	0
11:47:00 - 11:48:00	6	5	3	1	5	2	3	1
11:48:00 - 11:49:00	0	0	6	5	4	2	0	0
11:49:00 - 11:50:00	1	1	3	1	6	1	1	0
11:50:00 - 11:51:00	2	1	2	4	7	3	1	0
11:51:00 - 11:52:00	6	5	2	4	5	1	0	0
11:52:00 - 11:53:00	5	2	5	4	2	0	1	1
11:53:00 - 11:54:00	5	5	1	2	3	2	2	2
11:54:00 - 11:55:00	7	6	2	2	6	6	4	0
11:55:00 - 11:56:00	1	0	6	8	6	1	2	4
11:56:00 - 11:57:00	1	0	6	7	6	2	2	2
11:57:00 - 11:58:00	4	2	6	7	1	3	1	1
11:58:00 - 11:59:00	4	2	2	3	9	0	7	1
11:59:00 - 12:00:00	4	2	3	10	9	0	7	2
12:00:00 - 12:01:00	6	5	3	10	6	6	1	1
12:01:00 - 12:02:00	2	4	6	4	4	2	3	0
12:02:00 - 12:03:00	2	4	0	1	4	2	3	0
12:03:00 - 12:04:00	9	10	2	0	3	3	2	0
12:04:00 - 12:05:00	6	6	2	3	2	1	3	4
12:05:00 - 12:06:00	5	6	1	0	2	1	0	4
12:06:00 - 12:07:00	4	0	2	3	4	3	2	2
12:07:00 - 12:08:00	5	4	2	3	0	1	3	2
12:08:00 - 12:09:00	5	1	6	2	3	1	0	3
12:09:00 - 12:10:00	7	8	6	2	8	1	1	0
12:10:00 - 12:11:00	7	6	5	1	6	7	1	2
12:11:00 - 12:12:00	5	4	3	4	7	2	0	1
12:12:00 - 12:13:00	7	5	1	5	7	2	0	1
12:13:00 - 12:14:00	6	4	1	5	10	2	0	0
12:14:00 - 12:15:00	4	1	4	2	2	1	3	0
12:15:00 - 12:16:00	8	5	1	2	3	1	5	7
12:16:00 - 12:17:00	6	5	1	2	3	3	1	1
12:17:00 - 12:18:00	0	1	3	7	6	5	1	1
12:18:00 - 12:19:00	1	1	1	1	6	3	2	2
12:19:00 - 12:20:00	4	5	4	5	3	1	2	1
12:20:00 - 12:21:00	4	3	0	7	4	6	1	0
12:21:00 - 12:22:00	4	3	2	6	6	5	2	0
12:22:00 - 12:23:00	4	5	2	6	4	3	2	4
12:23:00 - 12:24:00	5	2	4	3	2	1	3	0
12:24:00 - 12:25:00	5	2	3	5	2	1	3	0
12:25:00 - 12:26:00	4	5	3	5	1	3	1	1
12:26:00 - 12:27:00	6	4	1	5	5	1	1	0
12:27:00 - 12:28:00	10	5	2	6	1	1	0	0
12:28:00 - 12:29:00	5	0	2	6	2	2	0	3
12:29:00 - 12:30:00	0	1	0	6	4	6	2	0
12:30:00 - 12:31:00	7	1	3	5	4	6	2	3
12:31:00 - 12:32:00	7	3	3	5	6	4	2	1
12:32:00 - 12:33:00	4	2	3	1	3	4	1	0
12:33:00 - 12:34:00	3	3	3	2	3	1	0	2
12:34:00 - 12:35:00	4	5	6	3	5	3	2	0
12:35:00 - 12:36:00	7	7	6	3	6	3	1	0
12:36:00 - 12:37:00	3	0	2	3	9	6	3	4
12:37:00 - 12:38:00	5	2	4	4	9	5	6	0
12:38:00 - 12:39:00	6	3	4	4	3	0	1	0
12:39:00 - 12:40:00	3	0	6	3	6	5	3	0
12:40:00 - 12:41:00	4	2	3	2	6	5	4	2
12:41:00 - 12:42:00	5	4	3	2	5	3	3	2
12:42:00 - 12:43:00	5	6	3	4	6	5	3	0
12:43:00 - 12:44:00	5	6	2	0	6	5	3	2
12:44:00 - 12:45:00	6	4	2	2	4	3	1	0
12:45:00 - 12:46:00	6	6	2	3	4	3	2	0
12:46:00 - 12:47:00	6	6	1	2	4	3	2	0
12:47:00 - 12:48:00	2	5	1	2	6	5	2	2
12:48:00 - 12:49:00	5	6	1	1	5	3	1	0
12:49:00 - 12:50:00	5	6	0	6	0	1	1	0
12:50:00 - 12:51:00	4	5	2	6	5	4	2	0
12:51:00 - 12:52:00	5	1	6	11	3	2	4	2
12:52:00 - 12:53:00	4	2	0	6	2	1	3	3
12:53:00 - 12:54:00	10	6	2	6	4	1	2	3
12:54:00 - 12:55:00	9	5	2	4	4	1	6	0
12:55:00 - 12:56:00	4	2	4	2	5	3	1	0
12:56:00 - 12:57:00	5	5	0	2	5	3	3	0
12:57:00 - 12:58:00	4	6	1	2	5	3	1	0
12:58:00 - 12:59:00	2	2	6	2	1	2	0	0
12:59:00 - 13:00:00	3	5	2	2	1	2	0	2
13:00:00 - 13:01:00	5	6	2	2	4	3	3	3
13:01:00 - 13:02:00	2	2	2	0	6	3	0	3
13:02:00 - 13:03:00	3	2	3	8	7	4	3	4
13:03:00 - 13:04:00	6	3	3	8	7	4	0	0
13:04:00 - 13:05:00	5	6	2	4	7	3	1	1
13:05:00 - 13:06:00	5	6	0	0	6	4	1	0
13:06:00 - 13:07:00	4	4	2	6	6	3	5	0
13:07:00 - 13:08:00	9	6	2	3	9	1	2	5
13:08:00 - 13:09:00	9	6	2	4	0	0	0	5
13:09:00 - 13:10:00	2	4	2	4	4	1	2	4
13:10:00 - 13:11:00	1	2	6	6	4	1	0	5
13:11:00 - 13:12:00	1	0	1	5	4	0	0	0
13:12:00 - 13:13:00	2	0	1	5	4	2	2	0
13:13:00 - 13:14:00	8	7	2	4	4	2	2	2
13:14:00 - 13:15:00	2	2	7	3	2	1	2	2
13:15:00 - 13:16:00	8	7	7	3	6	5	3	4
13:16:00 - 13:17:00	6	2	2	2	5	6	2	0
13:17:00 - 13:18:00	1	0	3	3	5	6	2	0
13:18:00 - 13:19:00	4	5	6	2	3	3	0	4
13:19:00 - 13:20:00	2	2	6	5	3	4	1	0
13:20:00 - 13:21:00	7	9	4	8	5	3	0	0
13:21:00 - 13:22:00	7	9	1	1	6	4	1	1
13:22:00 - 13:23:00	5	0	3	3	6	3	0	3
13:23:00 - 13:24:00	1	1	2	1	3	2	0	0
13:24:00 - 13:25:00	1	1	2	0	4	3	0	2
13:25:00 - 13:26:00	1	0	3	2	6	5	2	0
13:26:00 - 13:27:00	6	5	2	2	4	4	2	2
13:27:00 - 13:28:00	6	5	3	4	4	3	0	0
13:28:00 - 13:29:00	6	5	3	4	5	4	3	3
13:29:00 - 13:30:00	9	5	1	2	1	2	0	0
13:30:00 - 13:31:00	9	5	3	1	1	1	0	0
13:31:00 - 13:32:00	0	1	3	5	5	1	1	2
13:32:00 - 13:33:00	1	3	1	5	5	4	2	3
13:33:00 - 13:34:00	0	0	2	6	2	1	0	0
13:34:00 - 13:35:00	2	1	2	6	5	3	1	0
13:35:00 - 13:36:00	2	2	1	0	3	1	2	0
13:36:00 - 13:37:00	4	4	1	2	0	1	1	1
13:37:00 - 13:38:00	6	4	3	2	3	2	2	3
13:38:00 - 13:39:00	4	4	4	7	2	2	0	0
13:39:00 - 13:40:00	2	2	3	2	1	1	1	0
13:40:00 - 13:41:00	2	5	2	3	6	5	5	2
13:41:00 - 13:42:00	6	5	2	3	4	2	1	2
13:42:00 - 13:43:00	1	1	1	3	1	1	1	2
13:43:00 - 13:44:00	6	4	3	2	4	4	2	0
13:44:00 - 13:45:00	5	4	3	2	3	2	2	2
13:45:00 - 13:46:00	1	2	4	2	4	3	1	0
13:46:00 - 13:47:00	6	6	1	8	5	4	1	0
13:47:00 - 13:48:00	2	1	1	8	6	3	0	0
13:48:00 - 13:49:00	3	0	3	5	6	2	1	2
13:49:00 - 13:50:00	3	0	3	1	0	0	0	2
13:50:00 - 13:51:00	8	7	3	1	4	3	2	2
13:51:00 - 13:52:00	7	7	5	3	5	3	0	0
13:52:00 - 13:53:00	7	7	2	3	5	3	0	0
13:53:00 - 13:54:00	0	2	2	3	3	2	0	1
13:54:00 - 13:55:00	2	1	2	2	2	2	2	1
13:55:00 - 13:56:00	0	0	1	6	0	0	1	0
13:56:00 - 13:57:00	4	4	6	6	2	2	1	0
13:57:00 - 13:58:00	3	1	6	5	4	2	1	0
13:58:00 - 13:59:00	3	1	1	3	2	0	0	0
13:59:00 - 14:00:00	5	4	5	1	0	0	1	0
14:00:00 - 14:01:00	4	1	5	3	5	3	2	1
14:01:00 - 14:02:00	2	2	5	2	3	0	1	1
14:02:00 - 14:03:00	3	4	0	4	3	1	1	1
14:03:00 - 14:04:00	8	5	2	4	4	2	0	0
14:04:00 - 14:05:00	2	1	2	8	5	4	1	0
14:05:00 - 14:06:00	2	1	6	3	5	4	1	0
14:06:00 - 14:07:00	5	5	6	3	6	4	2	2
14:07:00 - 14:08:00	6	5	5	3	5	1	3	0
14:08:00 - 14:09:00	6	9	5	5	0	0	0	3
14:09:00 - 14:10:00	5	4	5	5	1	3	1	0
14:10:00 - 14:11:00	3	1	0	5	6	3	0	0
14:11:00 - 14:12:00	5	1	2	9	6	3	1	3
14:12:00 - 14:13:00	3	5	2	9	5	2	1	0
14:13:00 - 14:14:00	0	1	2	2	4	3	1	3
14:14:00 - 14:15:00	1	1	3	4	4	1	1	0
14:15:00 - 14:16:00	1	2	3	4	7	6	1	1
14:16:00 - 14:17:00	7	5	3	2	5	4	2	2
14:17:00 - 14:18:00	3	2	0	6	3	2	0	2
14:18:00 - 14:19:00	7	6	2	6	2	1	0	1
14:19:00 - 14:20:00	3	5	2	6	3	1	0	0
14:20:00 - 14:21:00	2	2	1	3	2	1	1	0
14:21:00 - 14:22:00	6	4	0	1	4	2	2	3
14:22:00 - 14:23:00	7	5	0	10	3	1	0	0
14:23:00 - 14:24:00	3	2	0	10	6	2	5	0
14:24:00 - 14:25:00	6	5	1	2	4	2	0	0
14:25:00 - 14:26:00	4	5	1	2	1	1	0	0
14:26:00 - 14:27:00	3	3	3	2	3	2	1	1
14:27:00 - 14:28:00	5	7	0	1	0	0	0	1
14:28:00 - 14:29:00	5	4	0	3	6	3	2	2
14:29:00 - 14:30:00	3	2	1	3	6	0	2	0
14:30:00 - 14:31:00	4	3	1	6	5	2	2	2
14:31:00 - 14:32:00	2	2	4	6	5	0	4	2
14:32:00 - 14:33:00	1	2	4	6	1	1	1	0
14:33:00 - 14:34:00	2	2	3	3	0	0	0	0
14:34:00 - 14:35:00	2	2	3	3	2	3	1	1
14:35:00 - 14:36:00	3	6	3	4	4	1	0	1
14:36:00 - 14:37:00	0	0	1	0	3	1	0	0
14:37:00 - 14:38:00	5	0	1	2	4	2	1	1
14:38:00 - 14:39:00	6	5	1	6	4	3	0	0
14:39:00 - 14:40:00	0	0	3	3	3	0	0	1
14:40:00 - 14:41:00	6	3	5	4	6	0	2	1
14:41:00 - 14:42:00	5	4	5	4	7	4	0	0
14:42:00 - 14:43:00	1	1	3	4	1	1	0	0
14:43:00 - 14:44:00	6	4	1	1	6	3	1	4
14:44:00 - 14:45:00	4	3	1	1	5	4	2	0
14:45:00 - 14:46:00	1	0	2	5	6	5	3	0
14:46:00 - 14:47:00	2	1	2	4	6	5	3	0
14:47:00 - 14:48:00	0	2	2	4	4	2	0	0
14:48:00 - 14:49:00	3	5	2	2	5	3	1	0
14:49:00 - 14:50:00	3	5	2	3	5	3	0	1
14:50:00 - 14:51:00	6	3	2	3	5	3	2	0
14:51:00 - 14:52:00	5	4	4	4	4	0	0	0
14:52:00 - 14:53:00	5	6	1	2	4	1	0	1
14:53:00 - 14:54:00	4	4	1	2	6	3	2	0
14:54:00 - 14:55:00	6	4	2	2	7	6	6	0
14:55:00 - 14:56:00	6	6	1	1	0	0	0	6
14:56:00 - 14:57:00	1	1	4	5	5	3	2	2
14:57:00 - 14:58:00	2	2	4	5	5	2	1	1
14:58:00 - 14:59:00	1	2	0	5	6	3	3	0
14:59:00 - 15:00:00	5	6	2	2	7	6	6	3

Appendix G TFL Correspondence

Few, Ellen

From: Bains Harrison <HarrisonBains@tfl.gov.uk>
Sent: 01 June 2020 18:12
To: Taylor, Ben
Cc: Few, Ellen
Subject: RE: 68663/APP/2020/705 - 217 High Street, Yiewsley

Hi Ben,

I can confirm that I'm happy with your summary notes of our previous discussion.

I have now reviewed the TRICS outputs you sent through. For the residential use, the TRICS sites selected are considered comparable to the proposal site based on the PTAL and proposed parking ratio. It is therefore acceptable to use the residential TRICS trip rates to inform the public transport trip generation. However for the GP surgery, as the selected TRICS sites are out of London, the trip rates by bus are far lower than what we would expect from the proposal site. We therefore have serious concerns with using these trip rates. I note that there is a single GP surgery site in the TRICS database within Greater London – I suggest taking a look at the bus trip rates for this site and running the trip generation accordingly.

I understand the guidance in the MfS regarding shared surfaces, however the safety issue primarily concerns the perpendicular parking spaces located either side of the shared surface. Providing footways between the parking spaces and the building frontages would minimise conflicting movements between pedestrians / cyclists and vehicles entering or egressing the parking spaces; therefore this is the solution required in terms of Vision Zero. The footways should connect, in accordance with the pedestrian desire lines, with the footway at the main access and the pedestrian link along the southern boundary of the GP surgery.

I trust this helps. I'll be on leave until next Monday so we can pick this up again then.

Kind regards
Harrison

Harrison Bains | Area Planner
Spatial Planning (West) | City Planning
M: 07894 710666 T: 0230 7126 4787 Ext: 64787

From: Taylor, Ben <ben.taylor@stantec.com>
Sent: 28 May 2020 11:59
To: Bains Harrison <HarrisonBains@tfl.gov.uk>
Cc: Few, Ellen <Ellen.Few@stantec.com>
Subject: RE: 68663/APP/2020/705 - 217 High Street, Yiewsley

Hi Harrison

Sorry to chase, but have you had an opportunity to review the notes of our discussion in my previous email and consider whether you would accept a trip rate based methodology?

I'd also like to gauge TfL's thoughts on providing for pedestrian movements in the area between the two buildings, as shown below. As per Table 7.4 of the TA submitted with the planning application, the forecast vehicle trip generation associated with the proposals is highest in the PM Peak hour at 80 two-way movements. This equates to approximately 1.3 vehicle movements per minute. At other times this would be less. Given that MfS notes that a shared surface is suitable for use for vehicle flows of up to 100vph, would it be acceptable to apply in this instance, with areas of parking shown by either surface markings or by changes in the surface palette?

If this is not agreeable, we would welcome your guidance on what solution would be acceptable in this environment. For example whether marked pedestrian walkways along the front of the parking spaces would be appropriate. I would note that we are looking at providing a footway along the main access road connecting the site to the wider highway network, to address TfL's previous comment on that.

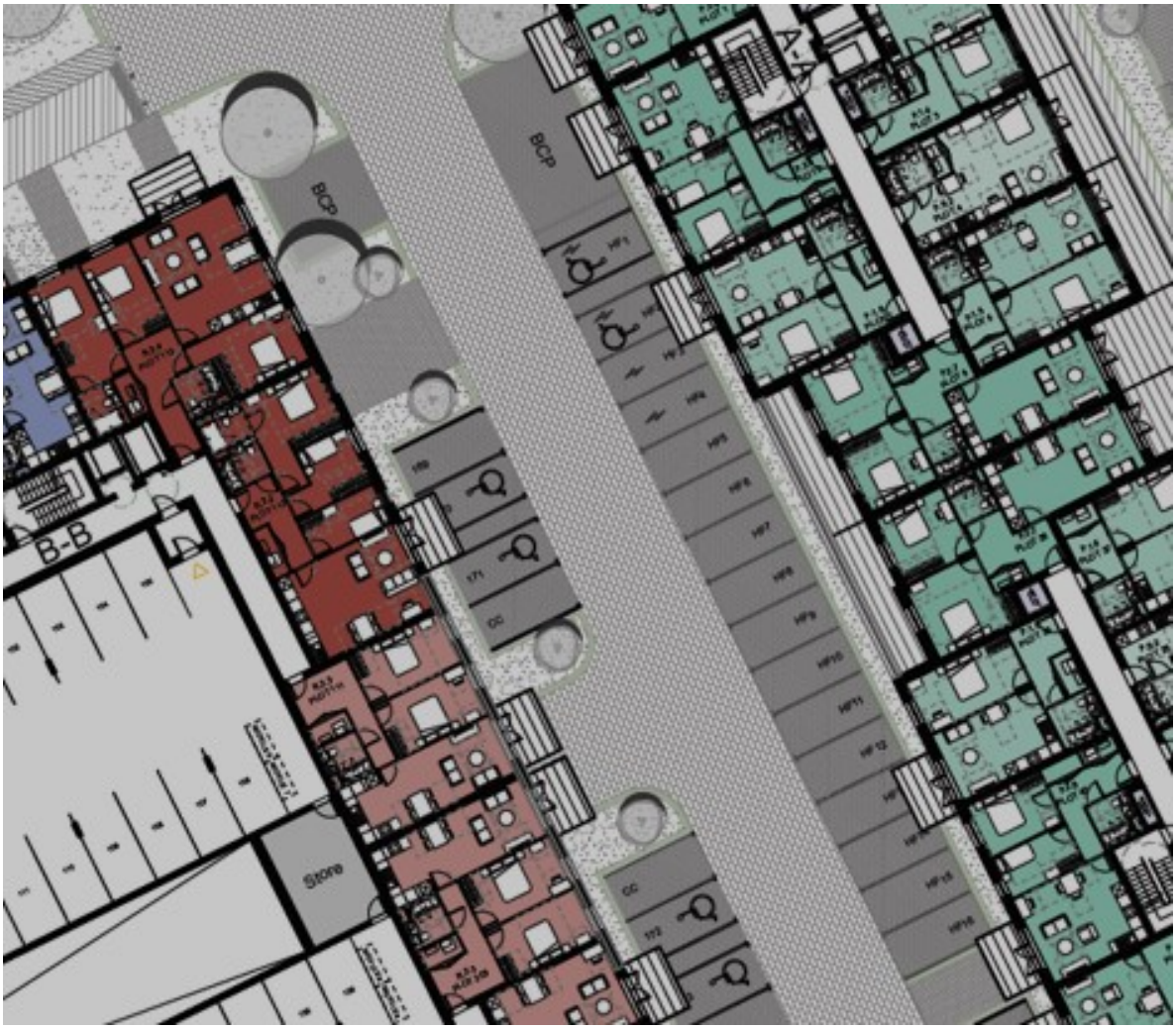

Kind regards

Ben Taylor
Associate

Direct: 0118 9520304
Mobile: 07887 418615
ben.taylor@stantec.com

The content of this email is the confidential property of Stantec and should not be copied, modified, retransmitted, or used for any purpose except with Stantec's written authorization. If you are not the intended recipient, please delete all copies and notify us immediately.

Please consider the environment before printing this email.

From: Taylor, Ben
Sent: 22 May 2020 13:05
To: Bains Harrison <HarrisonBains@tfl.gov.uk>
Cc: Few, Ellen <Ellen.Few@stantec.com>
Subject: RE: 68663/APP/2020/705 - 217 High Street, Yiewsley

Hi Harrison

Further to my email earlier, we realised that the TRICS outputs in the TA did not include all modes. We've re-run them again and extracted all modes this time. If you could review the attached instead, rather than the TA appendix please.

Many thanks

Kind regards

Ben Taylor
Associate

Direct: 0118 9520304
Mobile: 07887 418615
ben.taylor@stantec.com





The content of this email is the confidential property of Stantec and should not be copied, modified, retransmitted, or used for any purpose except with Stantec's written authorization. If you are not the intended recipient, please delete all copies and notify us immediately.
Please consider the environment before printing this email.

From: Taylor, Ben
Sent: 22 May 2020 10:50
To: Bains Harrison <HarrisonBains@tfl.gov.uk>
Cc: Few, Ellen <Ellen.Few@stantec.com>
Subject: RE: 68663/APP/2020/705 - 217 High Street, Yiewsley

Hi Harrison

Thanks very much for your time just now. I've summarised the key points of our discussion below. Grateful for any additions/amendments that you may have.

Active Travel Zone Assessment

- Due to current restrictions on site work due to COVID-19, the requirement for a comprehensive ATZ assessment can be conditioned.

Trip Generation Assessment

- HB advised that use of a person trip rate finessed with local Census mode share data would typically be preferable, but that TRICS based trip gen is acceptable in principle.
- HB to review TRICS outputs and site selections in TA Appendix I to confirm suitability for use in multimodal trip generation.
- BT noted that the TRICS data would be the preferred method to ensure future trip gen remains consistent with the results presented in the TA.

Public Transport Assessment

- This can be based on the AM and PM peak hour trip generation which comes out of the above exercise, reflecting the demand for local bus and rail services.

On-Site Pedestrian/Cyclist Movement

- HB advised that surface markings to designate pedestrian routes on shared roadspace will not be acceptable. This is particularly the case on the link entering the site where a segregated pedestrian route is required.

Car Parking

- HB queried if there was likely to be a reduction in car parking in line with TfL comments. BT noted that formal response on parking has not yet been received from LBH, but informally it is understood that they have requested additional car parking.

Model Auditing Process

- HB to query with colleagues when response on auditing likely to be available.

Kind regards

Ben Taylor
Associate

Direct: 0118 9520304
Mobile: 07887 418615
ben.taylor@stantec.com





The content of this email is the confidential property of Stantec and should not be copied, modified, retransmitted, or used for any purpose except with Stantec's written authorization. If you are not the intended recipient, please delete all copies and notify us immediately.
Please consider the environment before printing this email.

From: Bains Harrison <HarrisonBains@tfl.gov.uk>
Sent: 21 May 2020 17:42
To: Taylor, Ben <ben.taylor@stantec.com>
Cc: Few, Ellen <Ellen.Few@stantec.com>
Subject: RE: 68663/APP/2020/705 - 217 High Street, Yiewsley

Hi Ben,

Certainly, feel free to give me a call anytime after 10am.

Kind regards
Harrison

Harrison Bains | Area Planner
Spatial Planning (West) | City Planning
M: 07894 710666 T: 0230 7126 4787 Ext: 64787

From: Taylor, Ben <ben.taylor@stantec.com>
Sent: 21 May 2020 17:29
To: Bains Harrison <HarrisonBains@tfl.gov.uk>
Cc: Few, Ellen <Ellen.Few@stantec.com>
Subject: FW: 68663/APP/2020/705 - 217 High Street, Yiewsley

Hi Harrison

Thank you for the your comments on the above scheme. Do you have a few minutes on Friday morning for a quick call? I'd just like to discuss a couple of the comments to ensure that our proposed methodologies to address them are acceptable.

Kind regards

Ben Taylor
Associate

Direct: 0118 9520304
Mobile: 07887 418615
ben.taylor@stantec.com





The content of this email is the confidential property of Stantec and should not be copied, modified, retransmitted, or used for any purpose except with Stantec's written authorization. If you are not the intended recipient, please delete all copies and notify us immediately.
Please consider the environment before printing this email.

Appendix H Layout Plan

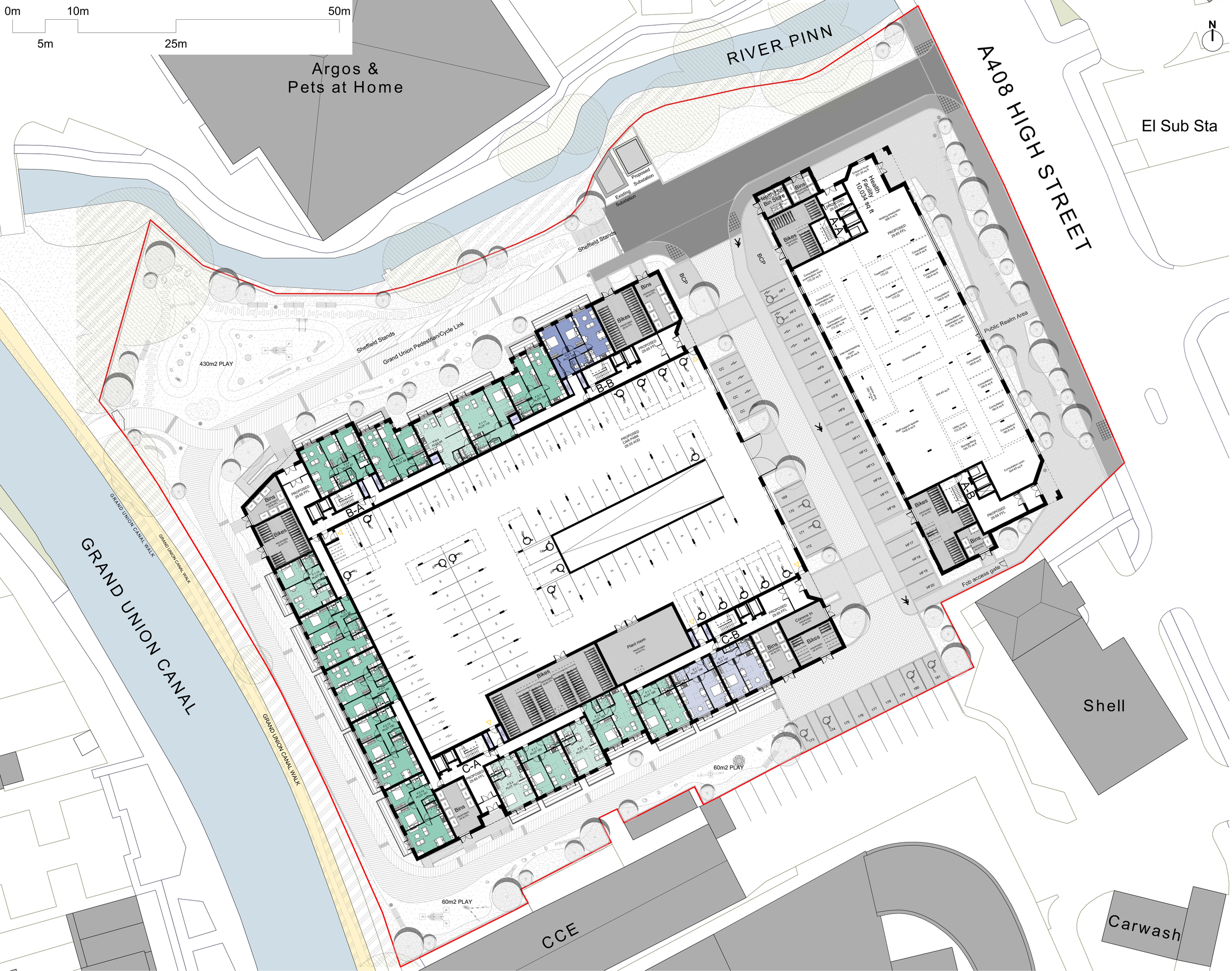

General notes

All setting out must be checked on site
All levels must be checked on site and refer to Ordnance Datum Newlyn unless alternative Datum given
All fixings and weatherings must be checked on site
All dimensions must be checked on site
This drawing must not be scaled
This drawing must be read in conjunction with all other relevant drawings, specification clauses and current design risk register
This drawing must not be used for land transfer purposes
Calculated areas in accordance with Assael Architecture's Definition of Areas for Schedule of Areas
This drawing must not be used on site unless issued for construction
Subject to survey, consultation and approval from all statutory Authorities

Drawing revision prefix (not applied to sketches):
P=Preliminary
C=Contract

© 2020 Assael Architecture Limited

Assael Architecture Limited has prepared this document in accordance with the instructions of the Client under the agreed Terms of Appointment. This document is for the sole and specific use of the Client and Assael Architecture shall not be responsible for any use of its contents for any purpose other than that for which it was prepared and provided. Should the Client require to pass electronic copies of the document to other parties, this should be for co-ordination purposes only, the whole of the file should be so copied, but no professional liability or warranty shall be extended to other parties by Assael Architecture in this connection without the explicit written agreement thereto by Assael Architecture Limited.

Drawing notes

Electronic file reference

A3318 200 PLANS

Status R:	Revision	Date	DRN	CHK	CDM
6	PLANNING	07/07/20	ME	JL	

Key

- Private - Studio
- Private - 1 Bed
- Private - 2 Bed
- Private - 3 Bed
- Affordable Rent - 1 Bed
- Affordable Rent - 2 Bed
- Affordable Rent - 3 Bed
- Affordable Shared - 1 Bed
- Affordable Shared - 2 Bed
- Affordable Shared - 3 Bed
- Site application boundary
- Existing trees

Purpose of information

The purpose of the information on this drawing is for:

All information on this drawing is not for construction unless it is marked for construction.

- Planning ☒
- Information ☐
- Comment ☐
- Client approval ☐
- Construction ☐
- Final Issue ☐

Key

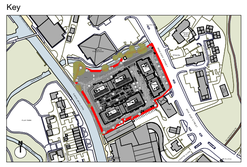

Taylor Wimpey

Client

Taylor Wimpey

Project title

A3318 High Street Yiewsley

Drawing title

Ground Floor Plan

Scale @ A1 size: **1:250**

Date: **Feb '20**

Drawing Nº

HSY-ASA-ZZ-GF-DR-A-200

Status & Revision

R6

Assael

Assael Architecture Limited
123 Upper Richmond Road
London SW15 2TL

+44 (0)20 7736 7744
info@assael.co.uk
www.assael.co.uk

Appendix I Swept Path Analysis – Servicing Vehicles



NOTES

VEHICLE PROFILE DIMENSIONS IN LINE WITH LONDON BOROUGH OF HILLINGDON'S LARGEST REFUSE COLLECTION VEHICLE

VEHICLE PROFILE:

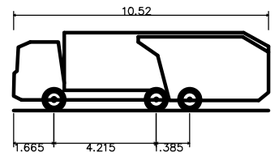

Hillingdon Borough Refuse Vehicle	
Overall Length	10.520m
Overall Width	2.530m
Overall Body Height	3.211m
Min Body Ground Clearance	0.416m
Track Width	2.530m
Lock to lock time	4.00s
Wall to Wall Turning Radius	12.000m

Mark	Revision	Date	Drawn	Chkd	Appd

SCALING NOTE: Do not scale this drawing - any errors or omissions shall be reported to Stantec without delay.

UTILITIES NOTE: The position of any existing public or private sewers, utility services, plant or apparatus shown on this drawing is believed to be correct, but no warranty to this is expressed or implied. Other such plant or apparatus may also be present but not shown. The Contractor is therefore advised to undertake their own investigation where the presence of any existing sewers, services, plant or apparatus may affect their operations.

Drawing Issue Status

FOR INFORMATION

YIEWSLEY HIGH STREET
SWEPT PATH ANALYSIS
REFUSE VEHICLE

Client

Taylor Wimpey

Date of 1st Issue	Designed	Drawn
11/06/2020	-	RC
A3 Scale	Checked	Approved
1:250	EF	

Drawing Number	Revision
46187/5501/SK013	-

Stantec

stantec.com/uk

Copyright reserved
The copyrights to all designs and drawings are the property of Stantec. Reproduction or use for any purpose other than that authorised by Stantec is forbidden.

READING
Tel: 01189 500 761

BOX VAN SERVICE VEHICLE

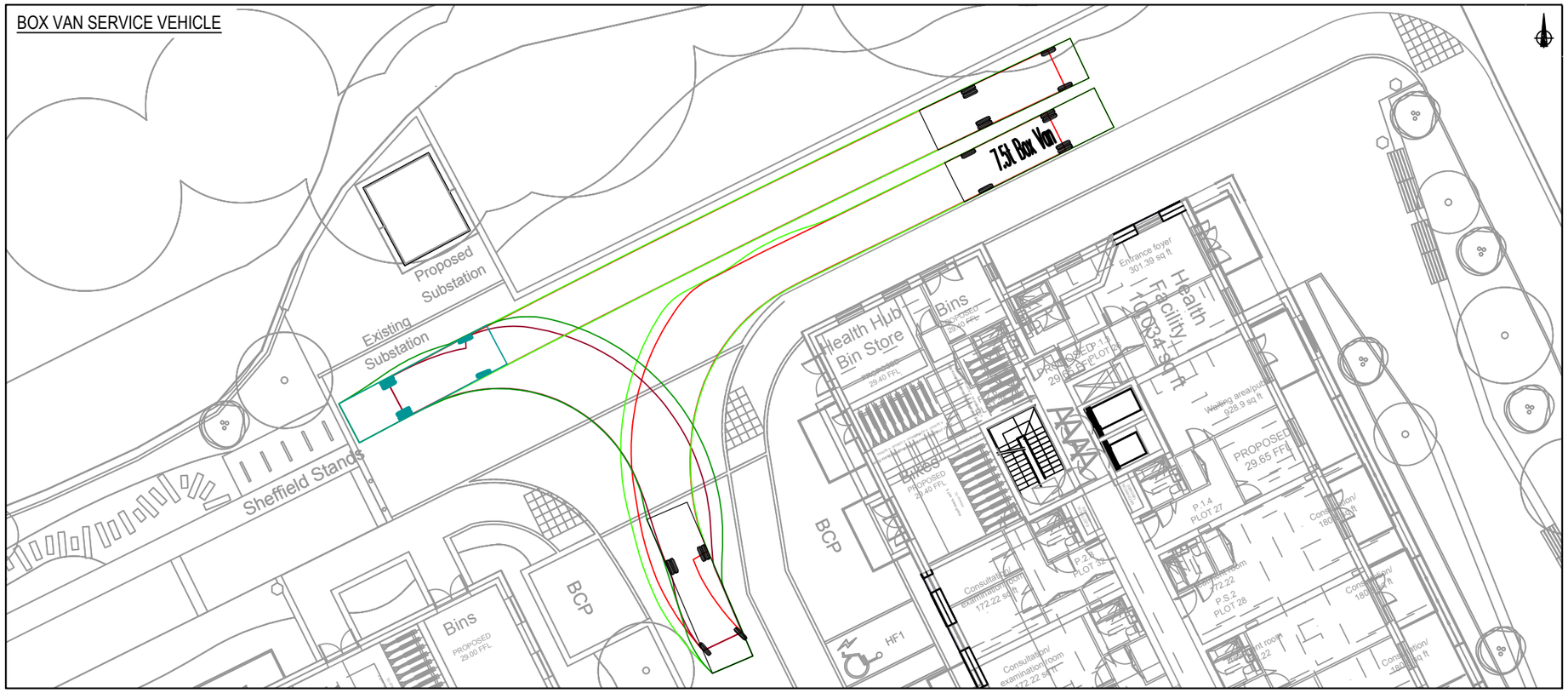

AMBULANCE

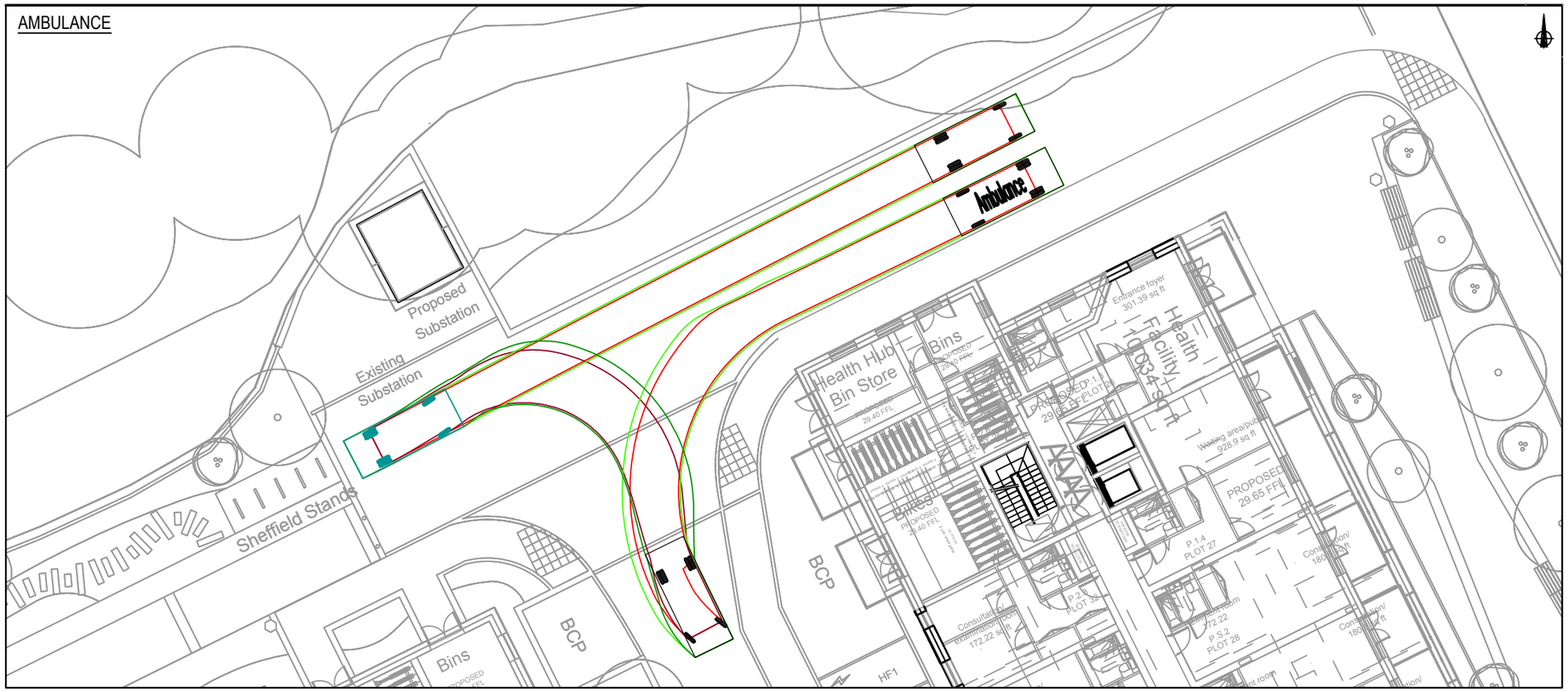

VEHICLE PROFILE:

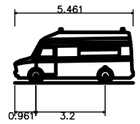

Ambulance	
Overall Length	5.461m
Overall Width	2.020m
Overall Body Height	2.498m
Min Body Ground Clearance	0.225m
Track Width	1.860m
Lock to lock time	4.00s
Kerb to Kerb Turning Radius	6.500m

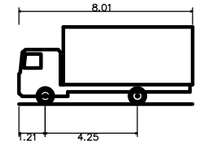

7.5t Box Van	
Overall Length	8.010m
Overall Width	2.100m
Overall Body Height	3.556m
Min Body Ground Clearance	0.351m
Track Width	2.064m
Lock to lock time	4.00s
Kerb to Kerb Turning Radius	7.400m

Mark	Revision	Date	Drawn	Chkd	Appd

SCALING NOTE: Do not scale this drawing - any errors or omissions shall be reported to Stantec without delay.

UTILITIES NOTE: The position of any existing public or private sewers, utility services, plant or apparatus shown on this drawing is believed to be correct, but no warranty to this is expressed or implied. Other such plant or apparatus may also be present but not shown. The Contractor is therefore advised to undertake their own investigation where the presence of any existing sewers, services, plant or apparatus may affect their operations.

Drawing Issue Status

FOR INFORMATION

YIEWSLEY HIGH STREET
SWEPT PATH ANALYSIS
BOX VAN SERVICE VEHICLE AND AMBULANCE

Client

Taylor Wimpey

Stantec

stantec.com/uk

Copyright reserved
The copyrights to all designs and drawings are the property of Stantec. Reproduction or use for any purpose other than that authorised by Stantec is forbidden.

READING
Tel: 01189 500 761

Date of 1st Issue	Designed	Drawn
11/06/2020	-	RC
A3 Scale	Checked	Approved
1:250	EF	

Drawing Number	Revision
46187/5501/SK014	-

Appendix J Swept Path Analysis – Car Parking

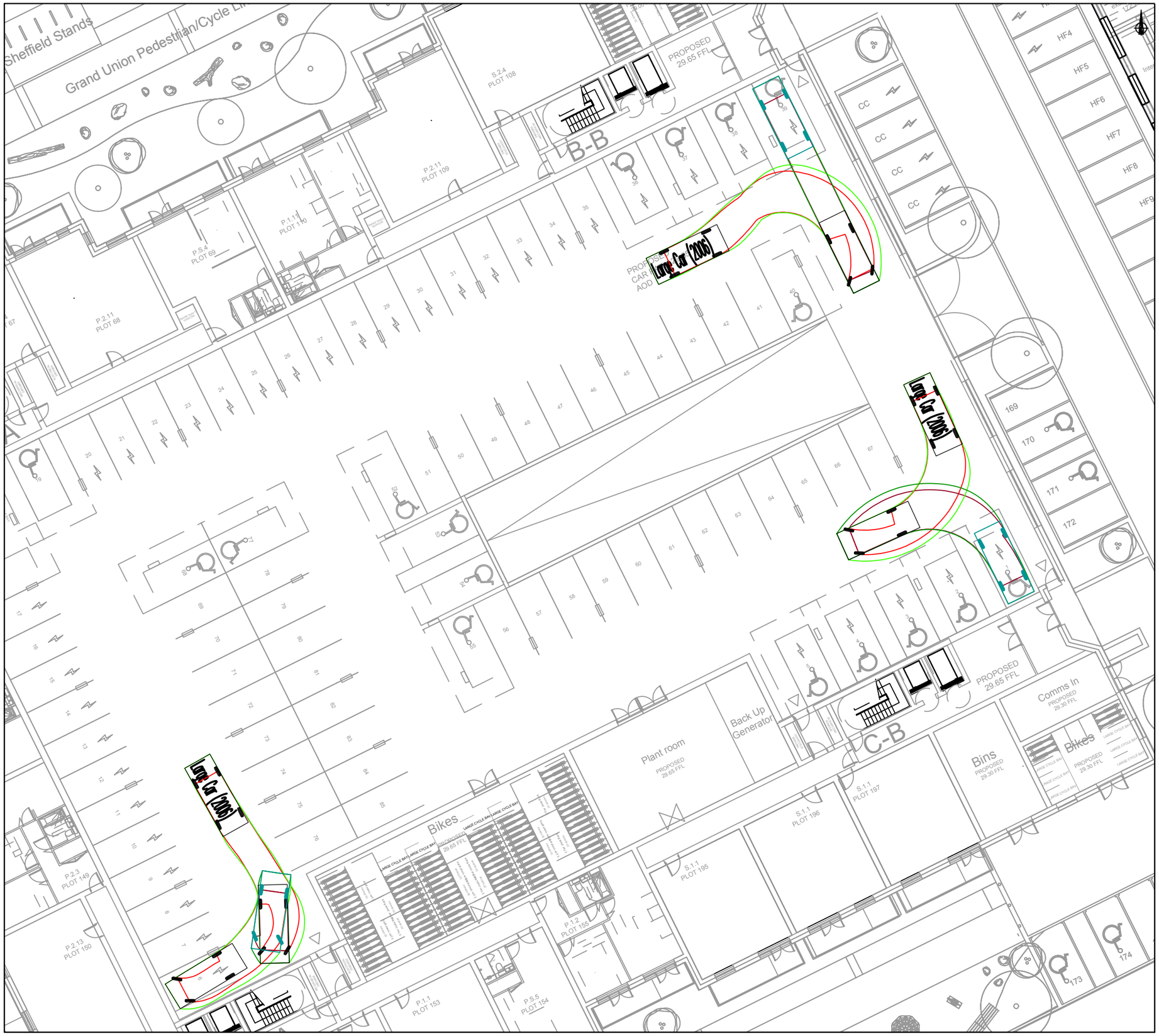

VEHICLE LEAVING BAY

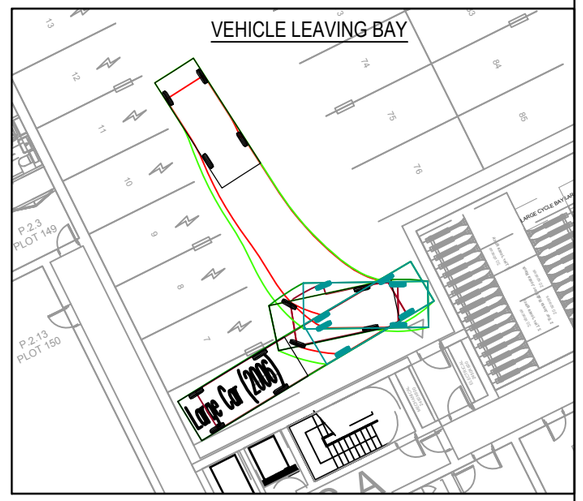

VEHICLE PROFILE:

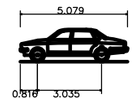

Large Car (2006)	
Overall Length	5.079m
Overall Width	1.872m
Overall Body Height	1.525m
Min Body Ground Clearance	0.310m
Max Track Width	1.831m
Lock to lock time	4.00s
Kerb to Kerb Turning Radius	5.900m

Mark	Revision	Date	Drawn	Chkd	Appd

SCALING NOTE: Do not scale this drawing - any errors or omissions shall be reported to Stantec without delay.

UTILITIES NOTE: The position of any existing public or private sewers, utility services, plant or apparatus shown on this drawing is believed to be correct, but no warranty to this is expressed or implied. Other such plant or apparatus may also be present but not shown. The Contractor is therefore advised to undertake their own investigation where the presence of any existing sewers, services, plant or apparatus may affect their operations.

Drawing Issue Status

FOR INFORMATION

YIEWSLEY HIGH STREET
SWEPT PATH ANALYSIS
GROUND FLOOR PARKING
LARGE CAR

Client

Taylor Wimpey

Date of 1st Issue	Designed	Drawn
11/06/2020	-	RC
A3 Scale	Checked	Approved
1:250	EF	

Drawing Number	Revision
46187/5501/SK015	-

Stantec

stantec.com/uk

Copyright reserved
The copyrights to all designs and drawings are the property of Stantec. Reproduction or use for any purpose other than that authorised by Stantec is forbidden.

READING
Tel: 01189 500 761

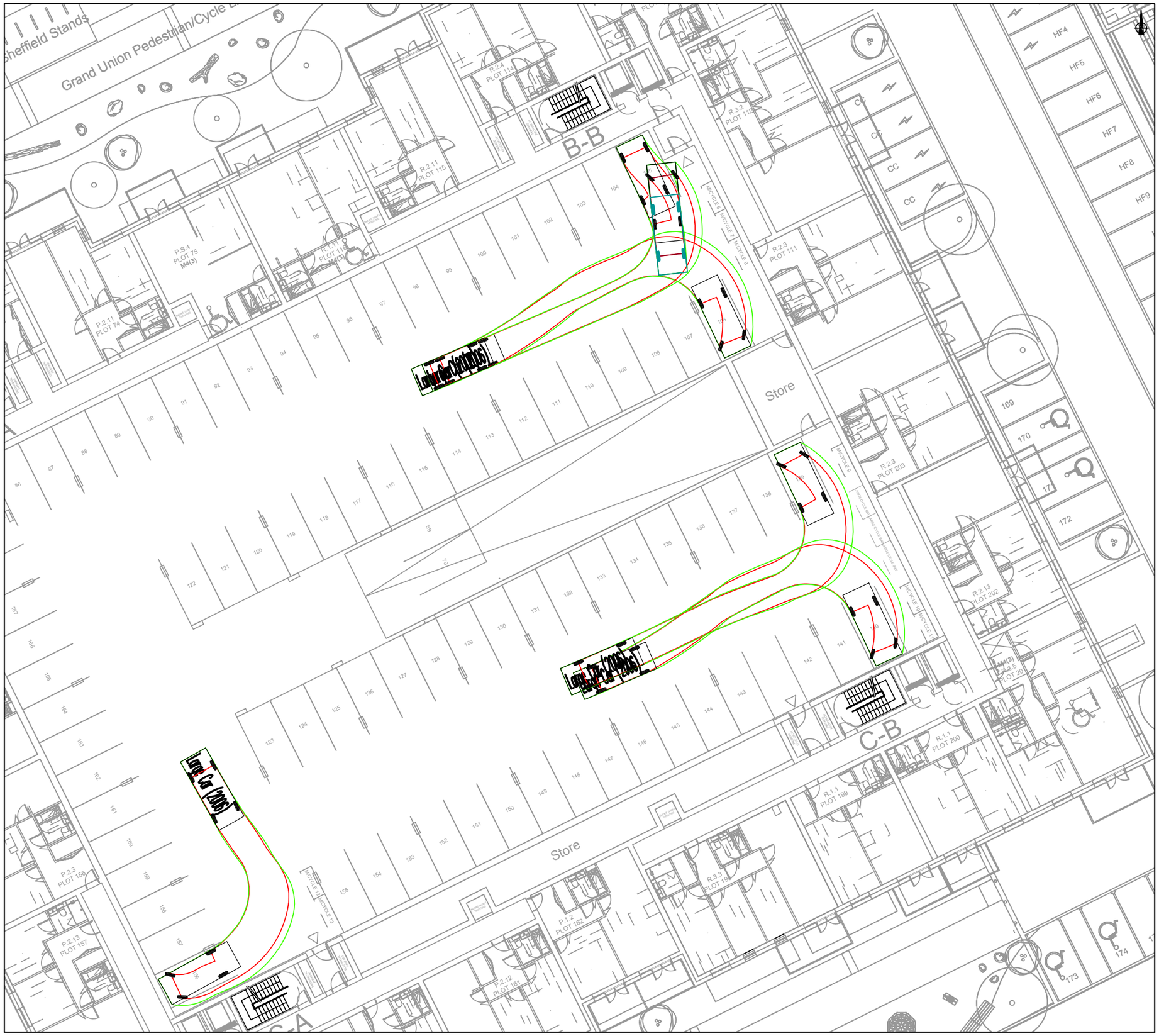

VEHICLE LEAVING BAY

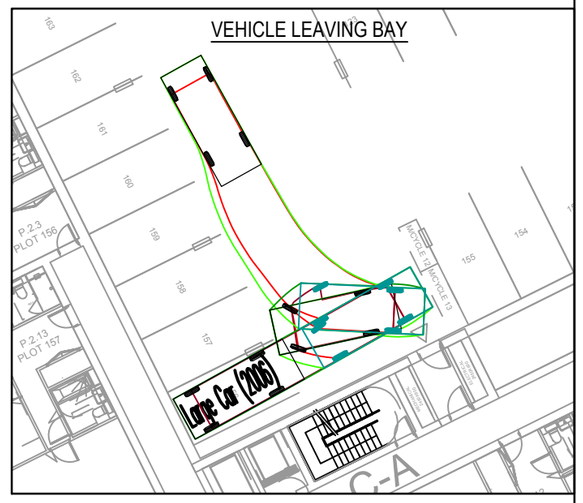

VEHICLE PROFILE:

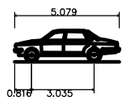

Large Car (2006)	
Overall Length	5.079m
Overall Width	1.872m
Overall Body Height	1.525m
Min Body Ground Clearance	0.310m
Max Track Width	1.831m
Lock to lock time	4.00s
Kerb to Kerb Turning Radius	5.900m

Mark	Revision	Date	Drawn	Chkd	Appd

SCALING NOTE: Do not scale this drawing - any errors or omissions shall be reported to Stantec without delay.

UTILITIES NOTE: The position of any existing public or private sewers, utility services, plant or apparatus shown on this drawing is believed to be correct, but no warranty to this is expressed or implied. Other such plant or apparatus may also be present but not shown. The Contractor is therefore advised to undertake their own investigation where the presence of any existing sewers, services, plant or apparatus may affect their operations.

Drawing Issue Status

FOR INFORMATION

YIEWSLEY HIGH STREET
SWEPT PATH ANALYSIS
FIRST FLOOR PARKING
LARGE CAR

Client

Taylor Wimpey

Date of 1st Issue	Designed	Drawn
11/06/2020	-	RC
A3 Scale	Checked	Approved
1:250	EF	

Drawing Number	Revision
46187/5501/SK016	-

Stantec

stantec.com/uk

Copyright reserved
The copyrights to all designs and drawings are the property of Stantec. Reproduction or use for any purpose other than that authorised by Stantec is forbidden.

READING
Tel: 01189 500 761

user name: cox, ryan

File Location: j:\46187 - 217 high street, yiewsley\transport\drawings, photos & videos\cad\dwgs\wip\46187-5501-sk016.dwg

Appendix K Trip Rates

Calculation Reference: AUDIT-706701-200522-0509

TRIP RATE CALCULATION SELECTION PARAMETERS:

Land Use : 03 - RESIDENTIAL
Category : C - FLATS PRIVATELY OWNED
MULTI-MODAL VEHICLES

Selected regions and areas:

01	GREATER LONDON		
	HO	HOUNSLOW	1 days
	HV	HAVERING	1 days

This section displays the number of survey days per TRICS® sub-region in the selected set

Primary Filtering selection:

This data displays the chosen trip rate parameter and its selected range. Only sites that fall within the parameter range are included in the trip rate calculation.

Parameter: No of Dwellings
Actual Range: 150 to 493 (units:)
Range Selected by User: 150 to 493 (units:)

Parking Spaces Range: All Surveys Included

Parking Spaces per Dwelling Range: All Surveys Included

Bedrooms per Dwelling Range: All Surveys Included

Percentage of dwellings privately owned: All Surveys Included

Public Transport Provision:
Selection by: Include all surveys

Date Range: 01/01/12 to 22/11/16

This data displays the range of survey dates selected. Only surveys that were conducted within this date range are included in the trip rate calculation.

Selected survey days:

Tuesday	1 days
Friday	1 days

This data displays the number of selected surveys by day of the week.

Selected survey types:

Manual count	2 days
Directional ATC Count	0 days

This data displays the number of manual classified surveys and the number of unclassified ATC surveys, the total adding up to the overall number of surveys in the selected set. Manual surveys are undertaken using staff, whilst ATC surveys are undertaking using machines.

Selected Locations:

Edge of Town Centre	1
Suburban Area (PPS6 Out of Centre)	1

This data displays the number of surveys per main location category within the selected set. The main location categories consist of Free Standing, Edge of Town, Suburban Area, Neighbourhood Centre, Edge of Town Centre, Town Centre and Not Known.

Selected Location Sub Categories:

Development Zone	1
Built-Up Zone	1

This data displays the number of surveys per location sub-category within the selected set. The location sub-categories consist of Commercial Zone, Industrial Zone, Development Zone, Residential Zone, Retail Zone, Built-Up Zone, Village, Out of Town, High Street and No Sub Category.

Secondary Filtering selection:

Use Class:

C3	2 days

This data displays the number of surveys per Use Class classification within the selected set. The Use Classes Order 2005 has been used for this purpose, which can be found within the Library module of TRICS®.

Secondary Filtering selection (Cont.):

Population within 1 mile:

10,001 to 15,000	1 days
25,001 to 50,000	1 days

This data displays the number of selected surveys within stated 1-mile radii of population.

Population within 5 miles:

125,001 to 250,000	1 days
500,001 or More	1 days

This data displays the number of selected surveys within stated 5-mile radii of population.

Car ownership within 5 miles:

0.6 to 1.0	1 days
1.1 to 1.5	1 days

This data displays the number of selected surveys within stated ranges of average cars owned per residential dwelling, within a radius of 5-miles of selected survey sites.

Travel Plan:

Yes	2 days

This data displays the number of surveys within the selected set that were undertaken at sites with Travel Plans in place, and the number of surveys that were undertaken at sites without Travel Plans.

PTAL Rating:

2 Poor	2 days

This data displays the number of selected surveys with PTAL Ratings.

LIST OF SITES relevant to selection parameters

1	HO-03-C-03 COMMERCE ROAD BRENTFORD	BLOCKS OF FLATS		HOUNSLOW
	Edge of Town Centre Development Zone Total No of Dwellings:		150	
	Survey date: FRIDAY		*18/11/16*	*Survey Type: MANUAL*
2	HV-03-C-02 WATERLOO ROAD ROMFORD	BLOCKS OF FLATS		HAVERING
	Suburban Area (PPS6 Out of Centre) Built-Up Zone Total No of Dwellings:		493	
	Survey date: TUESDAY		*22/11/16*	*Survey Type: MANUAL*

This section provides a list of all survey sites and days in the selected set. For each individual survey site, it displays a unique site reference code and site address, the selected trip rate calculation parameter and its value, the day of the week and date of each survey, and whether the survey was a manual classified count or an ATC count.

TRIP RATE for Land Use 03 - RESIDENTIAL/C - FLATS PRIVATELY OWNED
MULTI-MODAL VEHICLES
Calculation factor: 1 DWELLS
BOLD print indicates peak (busiest) period

	ARRIVALS			DEPARTURES			TOTALS		
Time Range	No. Days	Ave. DWELLS	Trip Rate	No. Days	Ave. DWELLS	Trip Rate	No. Days	Ave. DWELLS	Trip Rate
00:00 - 01:00									
01:00 - 02:00									
02:00 - 03:00									
03:00 - 04:00									
04:00 - 05:00									
05:00 - 06:00									
06:00 - 07:00									
07:00 - 08:00	2	322	0.033	2	322	0.089	2	322	0.122
08:00 - 09:00	2	322	0.034	2	322	0.104	2	322	0.138
09:00 - 10:00	2	322	0.047	2	322	0.051	2	322	0.098
10:00 - 11:00	2	322	0.042	2	322	0.054	2	322	0.096
11:00 - 12:00	2	322	0.039	2	322	0.056	2	322	0.095
12:00 - 13:00	2	322	0.048	2	322	0.044	2	322	0.092
13:00 - 14:00	2	322	0.058	2	322	0.058	2	322	0.116
14:00 - 15:00	2	322	0.045	2	322	0.051	2	322	0.096
15:00 - 16:00	2	322	0.087	2	322	0.065	2	322	0.152
16:00 - 17:00	2	322	0.107	2	322	0.064	2	322	0.171
17:00 - 18:00	2	322	0.123	2	322	0.059	2	322	0.182
18:00 - 19:00	2	322	0.117	2	322	0.067	2	322	0.184
19:00 - 20:00	1	150	0.067	1	150	0.080	1	150	0.147
20:00 - 21:00	1	150	0.047	1	150	0.047	1	150	0.094
21:00 - 22:00									
22:00 - 23:00									
23:00 - 24:00									
Total Rates:			0.894			0.889			1.783

This section displays the trip rate results based on the selected set of surveys and the selected count type (shown just above the table). It is split by three main columns, representing arrivals trips, departures trips, and total trips (arrivals plus departures). Within each of these main columns are three sub-columns. These display the number of survey days where count data is included (per time period), the average value of the selected trip rate calculation parameter (per time period), and the trip rate result (per time period). Total trip rates (the sum of the column) are also displayed at the foot of the table.

*To obtain a trip rate, the average (mean) trip rate parameter value (TRP) is first calculated for all selected survey days that have count data available for the stated time period. The average (mean) number of arrivals, departures or totals (whichever applies) is also calculated (COUNT) for all selected survey days that have count data available for the stated time period. Then, the average count is divided by the average trip rate parameter value, and multiplied by the stated calculation factor (shown just above the table and abbreviated here as FACT). So, the method is: COUNT/TRP*FACT. Trip rates are then rounded to 3 decimal places.*

The survey data, graphs and all associated supporting information, contained within the TRICS Database are published by TRICS Consortium Limited ("the Company") and the Company claims copyright and database rights in this published work. The Company authorises those who possess a current TRICS licence to access the TRICS Database and copy the data contained within the TRICS Database for the licence holders' use only. Any resulting copy must retain all copyrights and other proprietary notices, and any disclaimer contained thereon.

The Company accepts no responsibility for loss which may arise from reliance on data contained in the TRICS Database. [No warranty of any kind, express or implied, is made as to the data contained in the TRICS Database.]

Parameter summary

Trip rate parameter range selected:	150 - 493 (units:)
Survey date date range:	01/01/12 - 22/11/16
Number of weekdays (Monday-Friday):	2
Number of Saturdays:	0
Number of Sundays:	0
Surveys automatically removed from selection:	0
Surveys manually removed from selection:	0

This section displays a quick summary of some of the data filtering selections made by the TRICS® user. The trip rate calculation parameter range of all selected surveys is displayed first, followed by the range of minimum and maximum survey dates selected by the user. Then, the total number of selected weekdays and weekend days in the selected set of surveys are show. Finally, the number of survey days that have been manually removed from the selected set outside of the standard filtering procedure are displayed.

TRIP RATE for Land Use 03 - RESIDENTIAL/C - FLATS PRIVATELY OWNED
MULTI-MODAL TAXIS
Calculation factor: 1 DWELLS
BOLD print indicates peak (busiest) period

	ARRIVALS			DEPARTURES			TOTALS		
Time Range	No. Days	Ave. DWELLS	Trip Rate	No. Days	Ave. DWELLS	Trip Rate	No. Days	Ave. DWELLS	Trip Rate
00:00 - 01:00									
01:00 - 02:00									
02:00 - 03:00									
03:00 - 04:00									
04:00 - 05:00									
05:00 - 06:00									
06:00 - 07:00									
07:00 - 08:00	2	322	0.003	2	322	0.002	2	322	0.005
08:00 - 09:00	2	322	0.003	2	322	0.005	2	322	0.008
09:00 - 10:00	2	322	0.002	2	322	0.000	2	322	0.002
10:00 - 11:00	2	322	0.000	2	322	0.000	2	322	0.000
11:00 - 12:00	2	322	0.003	2	322	0.005	2	322	0.008
12:00 - 13:00	2	322	0.000	2	322	0.000	2	322	0.000
13:00 - 14:00	2	322	0.000	2	322	0.000	2	322	0.000
14:00 - 15:00	2	322	0.000	2	322	0.000	2	322	0.000
15:00 - 16:00	2	322	0.003	2	322	0.002	2	322	0.005
16:00 - 17:00	2	322	0.002	2	322	0.003	2	322	0.005
17:00 - 18:00	2	322	0.006	2	322	0.005	2	322	0.011
18:00 - 19:00	2	322	0.008	2	322	0.008	2	322	0.016
19:00 - 20:00	1	150	0.000	1	150	0.007	1	150	0.007
20:00 - 21:00	1	150	0.000	1	150	0.000	1	150	0.000
21:00 - 22:00									
22:00 - 23:00									
23:00 - 24:00									
Total Rates:			0.030			0.037			0.067

This section displays the trip rate results based on the selected set of surveys and the selected count type (shown just above the table). It is split by three main columns, representing arrivals trips, departures trips, and total trips (arrivals plus departures). Within each of these main columns are three sub-columns. These display the number of survey days where count data is included (per time period), the average value of the selected trip rate calculation parameter (per time period), and the trip rate result (per time period). Total trip rates (the sum of the column) are also displayed at the foot of the table.

*To obtain a trip rate, the average (mean) trip rate parameter value (TRP) is first calculated for all selected survey days that have count data available for the stated time period. The average (mean) number of arrivals, departures or totals (whichever applies) is also calculated (COUNT) for all selected survey days that have count data available for the stated time period. Then, the average count is divided by the average trip rate parameter value, and multiplied by the stated calculation factor (shown just above the table and abbreviated here as FACT). So, the method is: COUNT/TRP*FACT. Trip rates are then rounded to 3 decimal places.*

TRIP RATE for Land Use 03 - RESIDENTIAL/C - FLATS PRIVATELY OWNED
MULTI-MODAL OGVS
Calculation factor: 1 DWELLS
BOLD print indicates peak (busiest) period

	ARRIVALS			DEPARTURES			TOTALS		
Time Range	No. Days	Ave. DWELLS	Trip Rate	No. Days	Ave. DWELLS	Trip Rate	No. Days	Ave. DWELLS	Trip Rate
00:00 - 01:00									
01:00 - 02:00									
02:00 - 03:00									
03:00 - 04:00									
04:00 - 05:00									
05:00 - 06:00									
06:00 - 07:00									
07:00 - 08:00	2	322	0.003	2	322	0.005	2	322	0.008
08:00 - 09:00	2	322	0.002	2	322	0.000	2	322	0.002
09:00 - 10:00	2	322	0.006	2	322	0.006	2	322	0.012
10:00 - 11:00	2	322	0.000	2	322	0.000	2	322	0.000
11:00 - 12:00	2	322	0.002	2	322	0.000	2	322	0.002
12:00 - 13:00	2	322	0.000	2	322	0.000	2	322	0.000
13:00 - 14:00	2	322	0.005	2	322	0.008	2	322	0.013
14:00 - 15:00	2	322	0.002	2	322	0.002	2	322	0.004
15:00 - 16:00	2	322	0.000	2	322	0.002	2	322	0.002
16:00 - 17:00	2	322	0.000	2	322	0.000	2	322	0.000
17:00 - 18:00	2	322	0.003	2	322	0.002	2	322	0.005
18:00 - 19:00	2	322	0.000	2	322	0.000	2	322	0.000
19:00 - 20:00	1	150	0.000	1	150	0.000	1	150	0.000
20:00 - 21:00	1	150	0.000	1	150	0.000	1	150	0.000
21:00 - 22:00									
22:00 - 23:00									
23:00 - 24:00									
Total Rates:			0.023			0.025			0.048

This section displays the trip rate results based on the selected set of surveys and the selected count type (shown just above the table). It is split by three main columns, representing arrivals trips, departures trips, and total trips (arrivals plus departures). Within each of these main columns are three sub-columns. These display the number of survey days where count data is included (per time period), the average value of the selected trip rate calculation parameter (per time period), and the trip rate result (per time period). Total trip rates (the sum of the column) are also displayed at the foot of the table.

*To obtain a trip rate, the average (mean) trip rate parameter value (TRP) is first calculated for all selected survey days that have count data available for the stated time period. The average (mean) number of arrivals, departures or totals (whichever applies) is also calculated (COUNT) for all selected survey days that have count data available for the stated time period. Then, the average count is divided by the average trip rate parameter value, and multiplied by the stated calculation factor (shown just above the table and abbreviated here as FACT). So, the method is: COUNT/TRP*FACT. Trip rates are then rounded to 3 decimal places.*

TRIP RATE for Land Use 03 - RESIDENTIAL/C - FLATS PRIVATELY OWNED
MULTI-MODAL CYCLISTS
Calculation factor: 1 DWELLS
BOLD print indicates peak (busiest) period

	ARRIVALS			DEPARTURES			TOTALS		
Time Range	No. Days	Ave. DWELLS	Trip Rate	No. Days	Ave. DWELLS	Trip Rate	No. Days	Ave. DWELLS	Trip Rate
00:00 - 01:00									
01:00 - 02:00									
02:00 - 03:00									
03:00 - 04:00									
04:00 - 05:00									
05:00 - 06:00									
06:00 - 07:00									
07:00 - 08:00	2	322	0.005	2	322	0.011	2	322	0.016
08:00 - 09:00	2	322	0.003	2	322	0.011	2	322	0.014
09:00 - 10:00	2	322	0.002	2	322	0.005	2	322	0.007
10:00 - 11:00	2	322	0.000	2	322	0.003	2	322	0.003
11:00 - 12:00	2	322	0.002	2	322	0.002	2	322	0.004
12:00 - 13:00	2	322	0.000	2	322	0.000	2	322	0.000
13:00 - 14:00	2	322	0.003	2	322	0.000	2	322	0.003
14:00 - 15:00	2	322	0.002	2	322	0.008	2	322	0.010
15:00 - 16:00	2	322	0.002	2	322	0.002	2	322	0.004
16:00 - 17:00	2	322	0.003	2	322	0.000	2	322	0.003
17:00 - 18:00	2	322	0.005	2	322	0.002	2	322	0.007
18:00 - 19:00	2	322	0.002	2	322	0.002	2	322	0.004
19:00 - 20:00	1	150	0.027	1	150	0.000	1	150	0.027
20:00 - 21:00	1	150	0.013	1	150	0.000	1	150	0.013
21:00 - 22:00									
22:00 - 23:00									
23:00 - 24:00									
Total Rates:			0.069			0.046			0.115

This section displays the trip rate results based on the selected set of surveys and the selected count type (shown just above the table). It is split by three main columns, representing arrivals trips, departures trips, and total trips (arrivals plus departures). Within each of these main columns are three sub-columns. These display the number of survey days where count data is included (per time period), the average value of the selected trip rate calculation parameter (per time period), and the trip rate result (per time period). Total trip rates (the sum of the column) are also displayed at the foot of the table.

*To obtain a trip rate, the average (mean) trip rate parameter value (TRP) is first calculated for all selected survey days that have count data available for the stated time period. The average (mean) number of arrivals, departures or totals (whichever applies) is also calculated (COUNT) for all selected survey days that have count data available for the stated time period. Then, the average count is divided by the average trip rate parameter value, and multiplied by the stated calculation factor (shown just above the table and abbreviated here as FACT). So, the method is: COUNT/TRP*FACT. Trip rates are then rounded to 3 decimal places.*

TRIP RATE for Land Use 03 - RESIDENTIAL/C - FLATS PRIVATELY OWNED
MULTI-MODAL VEHICLE OCCUPANTS
Calculation factor: 1 DWELLS
BOLD print indicates peak (busiest) period

	ARRIVALS			DEPARTURES			TOTALS		
Time Range	No. Days	Ave. DWELLS	Trip Rate	No. Days	Ave. DWELLS	Trip Rate	No. Days	Ave. DWELLS	Trip Rate
00:00 - 01:00									
01:00 - 02:00									
02:00 - 03:00									
03:00 - 04:00									
04:00 - 05:00									
05:00 - 06:00									
06:00 - 07:00									
07:00 - 08:00	2	322	0.036	2	322	0.110	2	322	0.146
08:00 - 09:00	2	322	0.037	2	322	0.162	2	322	0.199
09:00 - 10:00	2	322	0.058	2	322	0.061	2	322	0.119
10:00 - 11:00	2	322	0.047	2	322	0.072	2	322	0.119
11:00 - 12:00	2	322	0.056	2	322	0.072	2	322	0.128
12:00 - 13:00	2	322	0.062	2	322	0.051	2	322	0.113
13:00 - 14:00	2	322	0.075	2	322	0.073	2	322	0.148
14:00 - 15:00	2	322	0.062	2	322	0.075	2	322	0.137
15:00 - 16:00	2	322	0.126	2	322	0.093	2	322	0.219
16:00 - 17:00	2	322	0.165	2	322	0.084	2	322	0.249
17:00 - 18:00	2	322	0.166	2	322	0.079	2	322	0.245
18:00 - 19:00	2	322	0.171	2	322	0.082	2	322	0.253
19:00 - 20:00	1	150	0.113	1	150	0.167	1	150	0.280
20:00 - 21:00	1	150	0.080	1	150	0.060	1	150	0.140
21:00 - 22:00									
22:00 - 23:00									
23:00 - 24:00									
Total Rates:			1.254			1.241			2.495

This section displays the trip rate results based on the selected set of surveys and the selected count type (shown just above the table). It is split by three main columns, representing arrivals trips, departures trips, and total trips (arrivals plus departures). Within each of these main columns are three sub-columns. These display the number of survey days where count data is included (per time period), the average value of the selected trip rate calculation parameter (per time period), and the trip rate result (per time period). Total trip rates (the sum of the column) are also displayed at the foot of the table.

*To obtain a trip rate, the average (mean) trip rate parameter value (TRP) is first calculated for all selected survey days that have count data available for the stated time period. The average (mean) number of arrivals, departures or totals (whichever applies) is also calculated (COUNT) for all selected survey days that have count data available for the stated time period. Then, the average count is divided by the average trip rate parameter value, and multiplied by the stated calculation factor (shown just above the table and abbreviated here as FACT). So, the method is: COUNT/TRP*FACT. Trip rates are then rounded to 3 decimal places.*

TRIP RATE for Land Use 03 - RESIDENTIAL/C - FLATS PRIVATELY OWNED
MULTI-MODAL PEDESTRIANS
Calculation factor: 1 DWELLS
BOLD print indicates peak (busiest) period

	ARRIVALS			DEPARTURES			TOTALS		
Time Range	No. Days	Ave. DWELLS	Trip Rate	No. Days	Ave. DWELLS	Trip Rate	No. Days	Ave. DWELLS	Trip Rate
00:00 - 01:00									
01:00 - 02:00									
02:00 - 03:00									
03:00 - 04:00									
04:00 - 05:00									
05:00 - 06:00									
06:00 - 07:00									
07:00 - 08:00	2	322	0.011	2	322	0.047	2	322	0.058
08:00 - 09:00	2	322	0.028	2	322	0.079	2	322	0.107
09:00 - 10:00	2	322	0.023	2	322	0.030	2	322	0.053
10:00 - 11:00	2	322	0.012	2	322	0.028	2	322	0.040
11:00 - 12:00	2	322	0.026	2	322	0.034	2	322	0.060
12:00 - 13:00	2	322	0.056	2	322	0.031	2	322	0.087
13:00 - 14:00	2	322	0.030	2	322	0.028	2	322	0.058
14:00 - 15:00	2	322	0.022	2	322	0.031	2	322	0.053
15:00 - 16:00	2	322	0.064	2	322	0.022	2	322	0.086
16:00 - 17:00	2	322	0.019	2	322	0.022	2	322	0.041
17:00 - 18:00	2	322	0.048	2	322	0.016	2	322	0.064
18:00 - 19:00	2	322	0.017	2	322	0.031	2	322	0.048
19:00 - 20:00	1	150	0.087	1	150	0.040	1	150	0.127
20:00 - 21:00	1	150	0.093	1	150	0.040	1	150	0.133
21:00 - 22:00									
22:00 - 23:00									
23:00 - 24:00									
Total Rates:			0.536			0.479			1.015

This section displays the trip rate results based on the selected set of surveys and the selected count type (shown just above the table). It is split by three main columns, representing arrivals trips, departures trips, and total trips (arrivals plus departures). Within each of these main columns are three sub-columns. These display the number of survey days where count data is included (per time period), the average value of the selected trip rate calculation parameter (per time period), and the trip rate result (per time period). Total trip rates (the sum of the column) are also displayed at the foot of the table.

*To obtain a trip rate, the average (mean) trip rate parameter value (TRP) is first calculated for all selected survey days that have count data available for the stated time period. The average (mean) number of arrivals, departures or totals (whichever applies) is also calculated (COUNT) for all selected survey days that have count data available for the stated time period. Then, the average count is divided by the average trip rate parameter value, and multiplied by the stated calculation factor (shown just above the table and abbreviated here as FACT). So, the method is: COUNT/TRP*FACT. Trip rates are then rounded to 3 decimal places.*

TRIP RATE for Land Use 03 - RESIDENTIAL/C - FLATS PRIVATELY OWNED
MULTI-MODAL BUS/TRAM PASSENGERS
Calculation factor: 1 DWELLS
BOLD print indicates peak (busiest) period

	ARRIVALS			DEPARTURES			TOTALS		
Time Range	No. Days	Ave. DWELLS	Trip Rate	No. Days	Ave. DWELLS	Trip Rate	No. Days	Ave. DWELLS	Trip Rate
00:00 - 01:00									
01:00 - 02:00									
02:00 - 03:00									
03:00 - 04:00									
04:00 - 05:00									
05:00 - 06:00									
06:00 - 07:00									
07:00 - 08:00	2	322	0.003	2	322	0.025	2	322	0.028
08:00 - 09:00	2	322	0.011	2	322	0.048	2	322	0.059
09:00 - 10:00	2	322	0.012	2	322	0.011	2	322	0.023
10:00 - 11:00	2	322	0.006	2	322	0.008	2	322	0.014
11:00 - 12:00	2	322	0.005	2	322	0.011	2	322	0.016
12:00 - 13:00	2	322	0.006	2	322	0.009	2	322	0.015
13:00 - 14:00	2	322	0.005	2	322	0.016	2	322	0.021
14:00 - 15:00	2	322	0.009	2	322	0.003	2	322	0.012
15:00 - 16:00	2	322	0.009	2	322	0.012	2	322	0.021
16:00 - 17:00	2	322	0.011	2	322	0.011	2	322	0.022
17:00 - 18:00	2	322	0.023	2	322	0.006	2	322	0.029
18:00 - 19:00	2	322	0.012	2	322	0.012	2	322	0.024
19:00 - 20:00	1	150	0.047	1	150	0.013	1	150	0.060
20:00 - 21:00	1	150	0.013	1	150	0.020	1	150	0.033
21:00 - 22:00									
22:00 - 23:00									
23:00 - 24:00									
Total Rates:			0.172			0.205			0.377

This section displays the trip rate results based on the selected set of surveys and the selected count type (shown just above the table). It is split by three main columns, representing arrivals trips, departures trips, and total trips (arrivals plus departures). Within each of these main columns are three sub-columns. These display the number of survey days where count data is included (per time period), the average value of the selected trip rate calculation parameter (per time period), and the trip rate result (per time period). Total trip rates (the sum of the column) are also displayed at the foot of the table.

*To obtain a trip rate, the average (mean) trip rate parameter value (TRP) is first calculated for all selected survey days that have count data available for the stated time period. The average (mean) number of arrivals, departures or totals (whichever applies) is also calculated (COUNT) for all selected survey days that have count data available for the stated time period. Then, the average count is divided by the average trip rate parameter value, and multiplied by the stated calculation factor (shown just above the table and abbreviated here as FACT). So, the method is: COUNT/TRP*FACT. Trip rates are then rounded to 3 decimal places.*

TRIP RATE for Land Use 03 - RESIDENTIAL/C - FLATS PRIVATELY OWNED
MULTI-MODAL TOTAL RAIL PASSENGERS
Calculation factor: 1 DWELLS
BOLD print indicates peak (busiest) period

	ARRIVALS			DEPARTURES			TOTALS		
Time Range	No. Days	Ave. DWELLS	Trip Rate	No. Days	Ave. DWELLS	Trip Rate	No. Days	Ave. DWELLS	Trip Rate
00:00 - 01:00									
01:00 - 02:00									
02:00 - 03:00									
03:00 - 04:00									
04:00 - 05:00									
05:00 - 06:00									
06:00 - 07:00									
07:00 - 08:00	2	322	0.003	2	322	0.031	2	322	0.034
08:00 - 09:00	2	322	0.005	2	322	0.061	2	322	0.066
09:00 - 10:00	2	322	0.006	2	322	0.009	2	322	0.015
10:00 - 11:00	2	322	0.002	2	322	0.008	2	322	0.010
11:00 - 12:00	2	322	0.002	2	322	0.005	2	322	0.007
12:00 - 13:00	2	322	0.002	2	322	0.005	2	322	0.007
13:00 - 14:00	2	322	0.000	2	322	0.002	2	322	0.002
14:00 - 15:00	2	322	0.002	2	322	0.000	2	322	0.002
15:00 - 16:00	2	322	0.005	2	322	0.002	2	322	0.007
16:00 - 17:00	2	322	0.005	2	322	0.003	2	322	0.008
17:00 - 18:00	2	322	0.031	2	322	0.006	2	322	0.037
18:00 - 19:00	2	322	0.051	2	322	0.000	2	322	0.051
19:00 - 20:00	1	150	0.020	1	150	0.000	1	150	0.020
20:00 - 21:00	1	150	0.013	1	150	0.000	1	150	0.013
21:00 - 22:00									
22:00 - 23:00									
23:00 - 24:00									
Total Rates:			0.147			0.132			0.279

This section displays the trip rate results based on the selected set of surveys and the selected count type (shown just above the table). It is split by three main columns, representing arrivals trips, departures trips, and total trips (arrivals plus departures). Within each of these main columns are three sub-columns. These display the number of survey days where count data is included (per time period), the average value of the selected trip rate calculation parameter (per time period), and the trip rate result (per time period). Total trip rates (the sum of the column) are also displayed at the foot of the table.

*To obtain a trip rate, the average (mean) trip rate parameter value (TRP) is first calculated for all selected survey days that have count data available for the stated time period. The average (mean) number of arrivals, departures or totals (whichever applies) is also calculated (COUNT) for all selected survey days that have count data available for the stated time period. Then, the average count is divided by the average trip rate parameter value, and multiplied by the stated calculation factor (shown just above the table and abbreviated here as FACT). So, the method is: COUNT/TRP*FACT. Trip rates are then rounded to 3 decimal places.*

TRIP RATE for Land Use 03 - RESIDENTIAL/C - FLATS PRIVATELY OWNED
MULTI-MODAL PUBLIC TRANSPORT USERS
Calculation factor: 1 DWELLS
BOLD print indicates peak (busiest) period

	ARRIVALS			DEPARTURES			TOTALS		
Time Range	No. Days	Ave. DWELLS	Trip Rate	No. Days	Ave. DWELLS	Trip Rate	No. Days	Ave. DWELLS	Trip Rate
00:00 - 01:00									
01:00 - 02:00									
02:00 - 03:00									
03:00 - 04:00									
04:00 - 05:00									
05:00 - 06:00									
06:00 - 07:00									
07:00 - 08:00	2	322	0.006	2	322	0.056	2	322	0.062
08:00 - 09:00	2	322	0.016	2	322	0.109	2	322	0.125
09:00 - 10:00	2	322	0.019	2	322	0.020	2	322	0.039
10:00 - 11:00	2	322	0.008	2	322	0.016	2	322	0.024
11:00 - 12:00	2	322	0.006	2	322	0.016	2	322	0.022
12:00 - 13:00	2	322	0.008	2	322	0.014	2	322	0.022
13:00 - 14:00	2	322	0.005	2	322	0.017	2	322	0.022
14:00 - 15:00	2	322	0.011	2	322	0.003	2	322	0.014
15:00 - 16:00	2	322	0.014	2	322	0.014	2	322	0.028
16:00 - 17:00	2	322	0.016	2	322	0.014	2	322	0.030
17:00 - 18:00	2	322	0.054	2	322	0.012	2	322	0.066
18:00 - 19:00	2	322	0.064	2	322	0.012	2	322	0.076
19:00 - 20:00	1	150	0.067	1	150	0.013	1	150	0.080
20:00 - 21:00	1	150	0.027	1	150	0.020	1	150	0.047
21:00 - 22:00									
22:00 - 23:00									
23:00 - 24:00									
Total Rates:			0.321			0.336			0.657

This section displays the trip rate results based on the selected set of surveys and the selected count type (shown just above the table). It is split by three main columns, representing arrivals trips, departures trips, and total trips (arrivals plus departures). Within each of these main columns are three sub-columns. These display the number of survey days where count data is included (per time period), the average value of the selected trip rate calculation parameter (per time period), and the trip rate result (per time period). Total trip rates (the sum of the column) are also displayed at the foot of the table.

*To obtain a trip rate, the average (mean) trip rate parameter value (TRP) is first calculated for all selected survey days that have count data available for the stated time period. The average (mean) number of arrivals, departures or totals (whichever applies) is also calculated (COUNT) for all selected survey days that have count data available for the stated time period. Then, the average count is divided by the average trip rate parameter value, and multiplied by the stated calculation factor (shown just above the table and abbreviated here as FACT). So, the method is: COUNT/TRP*FACT. Trip rates are then rounded to 3 decimal places.*

TRIP RATE for Land Use 03 - RESIDENTIAL/C - FLATS PRIVATELY OWNED
MULTI-MODAL TOTAL PEOPLE
Calculation factor: 1 DWELLS
BOLD print indicates peak (busiest) period

	ARRIVALS			DEPARTURES			TOTALS		
Time Range	No. Days	Ave. DWELLS	Trip Rate	No. Days	Ave. DWELLS	Trip Rate	No. Days	Ave. DWELLS	Trip Rate
00:00 - 01:00									
01:00 - 02:00									
02:00 - 03:00									
03:00 - 04:00									
04:00 - 05:00									
05:00 - 06:00									
06:00 - 07:00									
07:00 - 08:00	2	322	0.058	2	322	0.224	2	322	0.282
08:00 - 09:00	2	322	0.084	2	322	0.361	2	322	0.445
09:00 - 10:00	2	322	0.101	2	322	0.115	2	322	0.216
10:00 - 11:00	2	322	0.067	2	322	0.118	2	322	0.185
11:00 - 12:00	2	322	0.090	2	322	0.123	2	322	0.213
12:00 - 13:00	2	322	0.126	2	322	0.096	2	322	0.222
13:00 - 14:00	2	322	0.112	2	322	0.118	2	322	0.230
14:00 - 15:00	2	322	0.096	2	322	0.117	2	322	0.213
15:00 - 16:00	2	322	0.205	2	322	0.131	2	322	0.336
16:00 - 17:00	2	322	0.202	2	322	0.120	2	322	0.322
17:00 - 18:00	2	322	0.274	2	322	0.109	2	322	0.383
18:00 - 19:00	2	322	0.253	2	322	0.128	2	322	0.381
19:00 - 20:00	1	150	0.293	1	150	0.220	1	150	0.513
20:00 - 21:00	1	150	0.213	1	150	0.120	1	150	0.333
21:00 - 22:00									
22:00 - 23:00									
23:00 - 24:00									
Total Rates:			2.174			2.100			4.274

This section displays the trip rate results based on the selected set of surveys and the selected count type (shown just above the table). It is split by three main columns, representing arrivals trips, departures trips, and total trips (arrivals plus departures). Within each of these main columns are three sub-columns. These display the number of survey days where count data is included (per time period), the average value of the selected trip rate calculation parameter (per time period), and the trip rate result (per time period). Total trip rates (the sum of the column) are also displayed at the foot of the table.

*To obtain a trip rate, the average (mean) trip rate parameter value (TRP) is first calculated for all selected survey days that have count data available for the stated time period. The average (mean) number of arrivals, departures or totals (whichever applies) is also calculated (COUNT) for all selected survey days that have count data available for the stated time period. Then, the average count is divided by the average trip rate parameter value, and multiplied by the stated calculation factor (shown just above the table and abbreviated here as FACT). So, the method is: COUNT/TRP*FACT. Trip rates are then rounded to 3 decimal places.*

TRIP RATE for Land Use 03 - RESIDENTIAL/C - FLATS PRIVATELY OWNED
MULTI-MODAL CARS
Calculation factor: 1 DWELLS
BOLD print indicates peak (busiest) period

	ARRIVALS			DEPARTURES			TOTALS		
Time Range	No. Days	Ave. DWELLS	Trip Rate	No. Days	Ave. DWELLS	Trip Rate	No. Days	Ave. DWELLS	Trip Rate
00:00 - 01:00									
01:00 - 02:00									
02:00 - 03:00									
03:00 - 04:00									
04:00 - 05:00									
05:00 - 06:00									
06:00 - 07:00									
07:00 - 08:00	2	322	0.023	2	322	0.076	2	322	0.099
08:00 - 09:00	2	322	0.026	2	322	0.093	2	322	0.119
09:00 - 10:00	2	322	0.034	2	322	0.042	2	322	0.076
10:00 - 11:00	2	322	0.033	2	322	0.050	2	322	0.083
11:00 - 12:00	2	322	0.023	2	322	0.042	2	322	0.065
12:00 - 13:00	2	322	0.039	2	322	0.034	2	322	0.073
13:00 - 14:00	2	322	0.044	2	322	0.040	2	322	0.084
14:00 - 15:00	2	322	0.037	2	322	0.042	2	322	0.079
15:00 - 16:00	2	322	0.070	2	322	0.048	2	322	0.118
16:00 - 17:00	2	322	0.093	2	322	0.053	2	322	0.146
17:00 - 18:00	2	322	0.095	2	322	0.040	2	322	0.135
18:00 - 19:00	2	322	0.103	2	322	0.050	2	322	0.153
19:00 - 20:00	1	150	0.060	1	150	0.067	1	150	0.127
20:00 - 21:00	1	150	0.033	1	150	0.040	1	150	0.073
21:00 - 22:00									
22:00 - 23:00									
23:00 - 24:00									
Total Rates:			0.713			0.717			1.430

This section displays the trip rate results based on the selected set of surveys and the selected count type (shown just above the table). It is split by three main columns, representing arrivals trips, departures trips, and total trips (arrivals plus departures). Within each of these main columns are three sub-columns. These display the number of survey days where count data is included (per time period), the average value of the selected trip rate calculation parameter (per time period), and the trip rate result (per time period). Total trip rates (the sum of the column) are also displayed at the foot of the table.

*To obtain a trip rate, the average (mean) trip rate parameter value (TRP) is first calculated for all selected survey days that have count data available for the stated time period. The average (mean) number of arrivals, departures or totals (whichever applies) is also calculated (COUNT) for all selected survey days that have count data available for the stated time period. Then, the average count is divided by the average trip rate parameter value, and multiplied by the stated calculation factor (shown just above the table and abbreviated here as FACT). So, the method is: COUNT/TRP*FACT. Trip rates are then rounded to 3 decimal places.*

TRIP RATE for Land Use 03 - RESIDENTIAL/C - FLATS PRIVATELY OWNED
MULTI-MODAL LGVS
Calculation factor: 1 DWELLS
BOLD print indicates peak (busiest) period

	ARRIVALS			DEPARTURES			TOTALS		
Time Range	No. Days	Ave. DWELLS	Trip Rate	No. Days	Ave. DWELLS	Trip Rate	No. Days	Ave. DWELLS	Trip Rate
00:00 - 01:00									
01:00 - 02:00									
02:00 - 03:00									
03:00 - 04:00									
04:00 - 05:00									
05:00 - 06:00									
06:00 - 07:00									
07:00 - 08:00	2	322	0.003	2	322	0.003	2	322	0.006
08:00 - 09:00	2	322	0.002	2	322	0.002	2	322	0.004
09:00 - 10:00	2	322	0.005	2	322	0.003	2	322	0.008
10:00 - 11:00	2	322	0.009	2	322	0.005	2	322	0.014
11:00 - 12:00	2	322	0.009	2	322	0.009	2	322	0.018
12:00 - 13:00	2	322	0.009	2	322	0.009	2	322	0.018
13:00 - 14:00	2	322	0.009	2	322	0.008	2	322	0.017
14:00 - 15:00	2	322	0.006	2	322	0.008	2	322	0.014
15:00 - 16:00	2	322	0.011	2	322	0.014	2	322	0.025
16:00 - 17:00	2	322	0.012	2	322	0.008	2	322	0.020
17:00 - 18:00	2	322	0.012	2	322	0.011	2	322	0.023
18:00 - 19:00	2	322	0.003	2	322	0.005	2	322	0.008
19:00 - 20:00	1	150	0.000	1	150	0.007	1	150	0.007
20:00 - 21:00	1	150	0.000	1	150	0.000	1	150	0.000
21:00 - 22:00									
22:00 - 23:00									
23:00 - 24:00									
Total Rates:			0.090			0.092			0.182

This section displays the trip rate results based on the selected set of surveys and the selected count type (shown just above the table). It is split by three main columns, representing arrivals trips, departures trips, and total trips (arrivals plus departures). Within each of these main columns are three sub-columns. These display the number of survey days where count data is included (per time period), the average value of the selected trip rate calculation parameter (per time period), and the trip rate result (per time period). Total trip rates (the sum of the column) are also displayed at the foot of the table.

*To obtain a trip rate, the average (mean) trip rate parameter value (TRP) is first calculated for all selected survey days that have count data available for the stated time period. The average (mean) number of arrivals, departures or totals (whichever applies) is also calculated (COUNT) for all selected survey days that have count data available for the stated time period. Then, the average count is divided by the average trip rate parameter value, and multiplied by the stated calculation factor (shown just above the table and abbreviated here as FACT). So, the method is: COUNT/TRP*FACT. Trip rates are then rounded to 3 decimal places.*

TRIP RATE for Land Use 03 - RESIDENTIAL/C - FLATS PRIVATELY OWNED
MULTI-MODAL MOTOR CYCLES
Calculation factor: 1 DWELLS
BOLD print indicates peak (busiest) period

	ARRIVALS			DEPARTURES			TOTALS		
Time Range	No. Days	Ave. DWELLS	Trip Rate	No. Days	Ave. DWELLS	Trip Rate	No. Days	Ave. DWELLS	Trip Rate
00:00 - 01:00									
01:00 - 02:00									
02:00 - 03:00									
03:00 - 04:00									
04:00 - 05:00									
05:00 - 06:00									
06:00 - 07:00									
07:00 - 08:00	2	322	0.000	2	322	0.003	2	322	0.003
08:00 - 09:00	2	322	0.002	2	322	0.005	2	322	0.007
09:00 - 10:00	2	322	0.000	2	322	0.000	2	322	0.000
10:00 - 11:00	2	322	0.000	2	322	0.000	2	322	0.000
11:00 - 12:00	2	322	0.002	2	322	0.000	2	322	0.002
12:00 - 13:00	2	322	0.000	2	322	0.000	2	322	0.000
13:00 - 14:00	2	322	0.000	2	322	0.002	2	322	0.002
14:00 - 15:00	2	322	0.000	2	322	0.000	2	322	0.000
15:00 - 16:00	2	322	0.003	2	322	0.000	2	322	0.003
16:00 - 17:00	2	322	0.000	2	322	0.000	2	322	0.000
17:00 - 18:00	2	322	0.006	2	322	0.002	2	322	0.008
18:00 - 19:00	2	322	0.003	2	322	0.005	2	322	0.008
19:00 - 20:00	1	150	0.007	1	150	0.000	1	150	0.007
20:00 - 21:00	1	150	0.013	1	150	0.007	1	150	0.020
21:00 - 22:00									
22:00 - 23:00									
23:00 - 24:00									
Total Rates:			0.036			0.024			0.060

This section displays the trip rate results based on the selected set of surveys and the selected count type (shown just above the table). It is split by three main columns, representing arrivals trips, departures trips, and total trips (arrivals plus departures). Within each of these main columns are three sub-columns. These display the number of survey days where count data is included (per time period), the average value of the selected trip rate calculation parameter (per time period), and the trip rate result (per time period). Total trip rates (the sum of the column) are also displayed at the foot of the table.

*To obtain a trip rate, the average (mean) trip rate parameter value (TRP) is first calculated for all selected survey days that have count data available for the stated time period. The average (mean) number of arrivals, departures or totals (whichever applies) is also calculated (COUNT) for all selected survey days that have count data available for the stated time period. Then, the average count is divided by the average trip rate parameter value, and multiplied by the stated calculation factor (shown just above the table and abbreviated here as FACT). So, the method is: COUNT/TRP*FACT. Trip rates are then rounded to 3 decimal places.*

TRIP RATE for Land Use 03 - RESIDENTIAL/C - FLATS PRIVATELY OWNED
MULTI-MODAL Underground Passengers
Calculation factor: 1 DWELLS
BOLD print indicates peak (busiest) period

	ARRIVALS			DEPARTURES			TOTALS		
Time Range	No. Days	Ave. DWELLS	Trip Rate	No. Days	Ave. DWELLS	Trip Rate	No. Days	Ave. DWELLS	Trip Rate
00:00 - 01:00									
01:00 - 02:00									
02:00 - 03:00									
03:00 - 04:00									
04:00 - 05:00									
05:00 - 06:00									
06:00 - 07:00									
07:00 - 08:00	2	322	0.000	2	322	0.002	2	322	0.002
08:00 - 09:00	2	322	0.000	2	322	0.005	2	322	0.005
09:00 - 10:00	2	322	0.002	2	322	0.002	2	322	0.004
10:00 - 11:00	2	322	0.002	2	322	0.002	2	322	0.004
11:00 - 12:00	2	322	0.000	2	322	0.000	2	322	0.000
12:00 - 13:00	2	322	0.000	2	322	0.002	2	322	0.002
13:00 - 14:00	2	322	0.000	2	322	0.000	2	322	0.000
14:00 - 15:00	2	322	0.000	2	322	0.000	2	322	0.000
15:00 - 16:00	2	322	0.000	2	322	0.000	2	322	0.000
16:00 - 17:00	2	322	0.000	2	322	0.002	2	322	0.002
17:00 - 18:00	2	322	0.000	2	322	0.002	2	322	0.002
18:00 - 19:00	2	322	0.003	2	322	0.000	2	322	0.003
19:00 - 20:00	1	150	0.013	1	150	0.000	1	150	0.013
20:00 - 21:00	1	150	0.000	1	150	0.000	1	150	0.000
21:00 - 22:00									
22:00 - 23:00									
23:00 - 24:00									
Total Rates:			0.020			0.017			0.037

This section displays the trip rate results based on the selected set of surveys and the selected count type (shown just above the table). It is split by three main columns, representing arrivals trips, departures trips, and total trips (arrivals plus departures). Within each of these main columns are three sub-columns. These display the number of survey days where count data is included (per time period), the average value of the selected trip rate calculation parameter (per time period), and the trip rate result (per time period). Total trip rates (the sum of the column) are also displayed at the foot of the table.

*To obtain a trip rate, the average (mean) trip rate parameter value (TRP) is first calculated for all selected survey days that have count data available for the stated time period. The average (mean) number of arrivals, departures or totals (whichever applies) is also calculated (COUNT) for all selected survey days that have count data available for the stated time period. Then, the average count is divided by the average trip rate parameter value, and multiplied by the stated calculation factor (shown just above the table and abbreviated here as FACT). So, the method is: COUNT/TRP*FACT. Trip rates are then rounded to 3 decimal places.*

TRIP RATE for Land Use 03 - RESIDENTIAL/C - FLATS PRIVATELY OWNED
MULTI-MODAL DLR Passengers
Calculation factor: 1 DWELLS
BOLD print indicates peak (busiest) period

	ARRIVALS			DEPARTURES			TOTALS		
Time Range	No. Days	Ave. DWELLS	Trip Rate	No. Days	Ave. DWELLS	Trip Rate	No. Days	Ave. DWELLS	Trip Rate
00:00 - 01:00									
01:00 - 02:00									
02:00 - 03:00									
03:00 - 04:00									
04:00 - 05:00									
05:00 - 06:00									
06:00 - 07:00									
07:00 - 08:00	2	322	0.000	2	322	0.000	2	322	0.000
08:00 - 09:00	2	322	0.002	2	322	0.002	2	322	0.004
09:00 - 10:00	2	322	0.000	2	322	0.000	2	322	0.000
10:00 - 11:00	2	322	0.000	2	322	0.000	2	322	0.000
11:00 - 12:00	2	322	0.000	2	322	0.000	2	322	0.000
12:00 - 13:00	2	322	0.000	2	322	0.002	2	322	0.002
13:00 - 14:00	2	322	0.000	2	322	0.000	2	322	0.000
14:00 - 15:00	2	322	0.000	2	322	0.000	2	322	0.000
15:00 - 16:00	2	322	0.000	2	322	0.000	2	322	0.000
16:00 - 17:00	2	322	0.000	2	322	0.000	2	322	0.000
17:00 - 18:00	2	322	0.000	2	322	0.000	2	322	0.000
18:00 - 19:00	2	322	0.000	2	322	0.000	2	322	0.000
19:00 - 20:00	1	150	0.000	1	150	0.000	1	150	0.000
20:00 - 21:00	1	150	0.000	1	150	0.000	1	150	0.000
21:00 - 22:00									
22:00 - 23:00									
23:00 - 24:00									
Total Rates:			0.002			0.004			0.006

This section displays the trip rate results based on the selected set of surveys and the selected count type (shown just above the table). It is split by three main columns, representing arrivals trips, departures trips, and total trips (arrivals plus departures). Within each of these main columns are three sub-columns. These display the number of survey days where count data is included (per time period), the average value of the selected trip rate calculation parameter (per time period), and the trip rate result (per time period). Total trip rates (the sum of the column) are also displayed at the foot of the table.

*To obtain a trip rate, the average (mean) trip rate parameter value (TRP) is first calculated for all selected survey days that have count data available for the stated time period. The average (mean) number of arrivals, departures or totals (whichever applies) is also calculated (COUNT) for all selected survey days that have count data available for the stated time period. Then, the average count is divided by the average trip rate parameter value, and multiplied by the stated calculation factor (shown just above the table and abbreviated here as FACT). So, the method is: COUNT/TRP*FACT. Trip rates are then rounded to 3 decimal places.*

TRIP RATE for Land Use 03 - RESIDENTIAL/C - FLATS PRIVATELY OWNED
MULTI-MODAL National Rail Passengers
Calculation factor: 1 DWELLS
BOLD print indicates peak (busiest) period

	ARRIVALS			DEPARTURES			TOTALS		
Time Range	No. Days	Ave. DWELLS	Trip Rate	No. Days	Ave. DWELLS	Trip Rate	No. Days	Ave. DWELLS	Trip Rate
00:00 - 01:00									
01:00 - 02:00									
02:00 - 03:00									
03:00 - 04:00									
04:00 - 05:00									
05:00 - 06:00									
06:00 - 07:00									
07:00 - 08:00	2	322	0.003	2	322	0.030	2	322	0.033
08:00 - 09:00	2	322	0.003	2	322	0.054	2	322	0.057
09:00 - 10:00	2	322	0.005	2	322	0.008	2	322	0.013
10:00 - 11:00	2	322	0.000	2	322	0.006	2	322	0.006
11:00 - 12:00	2	322	0.002	2	322	0.005	2	322	0.007
12:00 - 13:00	2	322	0.002	2	322	0.002	2	322	0.004
13:00 - 14:00	2	322	0.000	2	322	0.002	2	322	0.002
14:00 - 15:00	2	322	0.002	2	322	0.000	2	322	0.002
15:00 - 16:00	2	322	0.005	2	322	0.002	2	322	0.007
16:00 - 17:00	2	322	0.005	2	322	0.002	2	322	0.007
17:00 - 18:00	2	322	0.031	2	322	0.005	2	322	0.036
18:00 - 19:00	2	322	0.048	2	322	0.000	2	322	0.048
19:00 - 20:00	1	150	0.007	1	150	0.000	1	150	0.007
20:00 - 21:00	1	150	0.013	1	150	0.000	1	150	0.013
21:00 - 22:00									
22:00 - 23:00									
23:00 - 24:00									
Total Rates:			0.126			0.116			0.242

This section displays the trip rate results based on the selected set of surveys and the selected count type (shown just above the table). It is split by three main columns, representing arrivals trips, departures trips, and total trips (arrivals plus departures). Within each of these main columns are three sub-columns. These display the number of survey days where count data is included (per time period), the average value of the selected trip rate calculation parameter (per time period), and the trip rate result (per time period). Total trip rates (the sum of the column) are also displayed at the foot of the table.

*To obtain a trip rate, the average (mean) trip rate parameter value (TRP) is first calculated for all selected survey days that have count data available for the stated time period. The average (mean) number of arrivals, departures or totals (whichever applies) is also calculated (COUNT) for all selected survey days that have count data available for the stated time period. Then, the average count is divided by the average trip rate parameter value, and multiplied by the stated calculation factor (shown just above the table and abbreviated here as FACT). So, the method is: COUNT/TRP*FACT. Trip rates are then rounded to 3 decimal places.*

TRIP RATE for Land Use 03 - RESIDENTIAL/C - FLATS PRIVATELY OWNED
MULTI-MODAL Bus Passengers
Calculation factor: 1 DWELLS
BOLD print indicates peak (busiest) period

	ARRIVALS			DEPARTURES			TOTALS		
Time Range	No. Days	Ave. DWELLS	Trip Rate	No. Days	Ave. DWELLS	Trip Rate	No. Days	Ave. DWELLS	Trip Rate
00:00 - 01:00									
01:00 - 02:00									
02:00 - 03:00									
03:00 - 04:00									
04:00 - 05:00									
05:00 - 06:00									
06:00 - 07:00									
07:00 - 08:00	2	322	0.003	2	322	0.025	2	322	0.028
08:00 - 09:00	2	322	0.011	2	322	0.048	2	322	0.059
09:00 - 10:00	2	322	0.012	2	322	0.011	2	322	0.023
10:00 - 11:00	2	322	0.006	2	322	0.008	2	322	0.014
11:00 - 12:00	2	322	0.005	2	322	0.011	2	322	0.016
12:00 - 13:00	2	322	0.006	2	322	0.009	2	322	0.015
13:00 - 14:00	2	322	0.005	2	322	0.016	2	322	0.021
14:00 - 15:00	2	322	0.009	2	322	0.003	2	322	0.012
15:00 - 16:00	2	322	0.009	2	322	0.012	2	322	0.021
16:00 - 17:00	2	322	0.011	2	322	0.011	2	322	0.022
17:00 - 18:00	2	322	0.023	2	322	0.006	2	322	0.029
18:00 - 19:00	2	322	0.012	2	322	0.012	2	322	0.024
19:00 - 20:00	1	150	0.047	1	150	0.013	1	150	0.060
20:00 - 21:00	1	150	0.013	1	150	0.020	1	150	0.033
21:00 - 22:00									
22:00 - 23:00									
23:00 - 24:00									
Total Rates:			0.172			0.205			0.377

This section displays the trip rate results based on the selected set of surveys and the selected count type (shown just above the table). It is split by three main columns, representing arrivals trips, departures trips, and total trips (arrivals plus departures). Within each of these main columns are three sub-columns. These display the number of survey days where count data is included (per time period), the average value of the selected trip rate calculation parameter (per time period), and the trip rate result (per time period). Total trip rates (the sum of the column) are also displayed at the foot of the table.

*To obtain a trip rate, the average (mean) trip rate parameter value (TRP) is first calculated for all selected survey days that have count data available for the stated time period. The average (mean) number of arrivals, departures or totals (whichever applies) is also calculated (COUNT) for all selected survey days that have count data available for the stated time period. Then, the average count is divided by the average trip rate parameter value, and multiplied by the stated calculation factor (shown just above the table and abbreviated here as FACT). So, the method is: COUNT/TRP*FACT. Trip rates are then rounded to 3 decimal places.*

TRIP RATE for Land Use 03 - RESIDENTIAL/C - FLATS PRIVATELY OWNED
MULTI-MODAL Light Vehicles (LV)
Calculation factor: 1 DWELLS
BOLD print indicates peak (busiest) period

	ARRIVALS			DEPARTURES			TOTALS		
Time Range	No. Days	Ave. DWELLS	Trip Rate	No. Days	Ave. DWELLS	Trip Rate	No. Days	Ave. DWELLS	Trip Rate
00:00 - 01:00									
01:00 - 02:00									
02:00 - 03:00									
03:00 - 04:00									
04:00 - 05:00									
05:00 - 06:00									
06:00 - 07:00									
07:00 - 08:00									
08:00 - 09:00									
09:00 - 10:00									
10:00 - 11:00									
11:00 - 12:00									
12:00 - 13:00									
13:00 - 14:00									
14:00 - 15:00									
15:00 - 16:00									
16:00 - 17:00									
17:00 - 18:00									
18:00 - 19:00									
19:00 - 20:00									
20:00 - 21:00									
21:00 - 22:00									
22:00 - 23:00									
23:00 - 24:00									
Total Rates:			0.000			0.000			0.000

This section displays the trip rate results based on the selected set of surveys and the selected count type (shown just above the table). It is split by three main columns, representing arrivals trips, departures trips, and total trips (arrivals plus departures). Within each of these main columns are three sub-columns. These display the number of survey days where count data is included (per time period), the average value of the selected trip rate calculation parameter (per time period), and the trip rate result (per time period). Total trip rates (the sum of the column) are also displayed at the foot of the table.

*To obtain a trip rate, the average (mean) trip rate parameter value (TRP) is first calculated for all selected survey days that have count data available for the stated time period. The average (mean) number of arrivals, departures or totals (whichever applies) is also calculated (COUNT) for all selected survey days that have count data available for the stated time period. Then, the average count is divided by the average trip rate parameter value, and multiplied by the stated calculation factor (shown just above the table and abbreviated here as FACT). So, the method is: COUNT/TRP*FACT. Trip rates are then rounded to 3 decimal places.*

TRIP RATE for Land Use 03 - RESIDENTIAL/C - FLATS PRIVATELY OWNED
MULTI-MODAL Rigid Trucks - No Trailer (OGV1)
Calculation factor: 1 DWELLS
BOLD print indicates peak (busiest) period

	ARRIVALS			DEPARTURES			TOTALS		
Time Range	No. Days	Ave. DWELLS	Trip Rate	No. Days	Ave. DWELLS	Trip Rate	No. Days	Ave. DWELLS	Trip Rate
00:00 - 01:00									
01:00 - 02:00									
02:00 - 03:00									
03:00 - 04:00									
04:00 - 05:00									
05:00 - 06:00									
06:00 - 07:00									
07:00 - 08:00									
08:00 - 09:00									
09:00 - 10:00									
10:00 - 11:00									
11:00 - 12:00									
12:00 - 13:00									
13:00 - 14:00									
14:00 - 15:00									
15:00 - 16:00									
16:00 - 17:00									
17:00 - 18:00									
18:00 - 19:00									
19:00 - 20:00									
20:00 - 21:00									
21:00 - 22:00									
22:00 - 23:00									
23:00 - 24:00									
Total Rates:			0.000			0.000			0.000

This section displays the trip rate results based on the selected set of surveys and the selected count type (shown just above the table). It is split by three main columns, representing arrivals trips, departures trips, and total trips (arrivals plus departures). Within each of these main columns are three sub-columns. These display the number of survey days where count data is included (per time period), the average value of the selected trip rate calculation parameter (per time period), and the trip rate result (per time period). Total trip rates (the sum of the column) are also displayed at the foot of the table.

*To obtain a trip rate, the average (mean) trip rate parameter value (TRP) is first calculated for all selected survey days that have count data available for the stated time period. The average (mean) number of arrivals, departures or totals (whichever applies) is also calculated (COUNT) for all selected survey days that have count data available for the stated time period. Then, the average count is divided by the average trip rate parameter value, and multiplied by the stated calculation factor (shown just above the table and abbreviated here as FACT). So, the method is: COUNT/TRP*FACT. Trip rates are then rounded to 3 decimal places.*

TRIP RATE for Land Use 03 - RESIDENTIAL/C - FLATS PRIVATELY OWNED
MULTI-MODAL Trucks Towing Trailers (OGV2)
Calculation factor: 1 DWELLS
BOLD print indicates peak (busiest) period

	ARRIVALS			DEPARTURES			TOTALS		
Time Range	No. Days	Ave. DWELLS	Trip Rate	No. Days	Ave. DWELLS	Trip Rate	No. Days	Ave. DWELLS	Trip Rate
00:00 - 01:00									
01:00 - 02:00									
02:00 - 03:00									
03:00 - 04:00									
04:00 - 05:00									
05:00 - 06:00									
06:00 - 07:00									
07:00 - 08:00									
08:00 - 09:00									
09:00 - 10:00									
10:00 - 11:00									
11:00 - 12:00									
12:00 - 13:00									
13:00 - 14:00									
14:00 - 15:00									
15:00 - 16:00									
16:00 - 17:00									
17:00 - 18:00									
18:00 - 19:00									
19:00 - 20:00									
20:00 - 21:00									
21:00 - 22:00									
22:00 - 23:00									
23:00 - 24:00									
Total Rates:			0.000			0.000			0.000

This section displays the trip rate results based on the selected set of surveys and the selected count type (shown just above the table). It is split by three main columns, representing arrivals trips, departures trips, and total trips (arrivals plus departures). Within each of these main columns are three sub-columns. These display the number of survey days where count data is included (per time period), the average value of the selected trip rate calculation parameter (per time period), and the trip rate result (per time period). Total trip rates (the sum of the column) are also displayed at the foot of the table.

*To obtain a trip rate, the average (mean) trip rate parameter value (TRP) is first calculated for all selected survey days that have count data available for the stated time period. The average (mean) number of arrivals, departures or totals (whichever applies) is also calculated (COUNT) for all selected survey days that have count data available for the stated time period. Then, the average count is divided by the average trip rate parameter value, and multiplied by the stated calculation factor (shown just above the table and abbreviated here as FACT). So, the method is: COUNT/TRP*FACT. Trip rates are then rounded to 3 decimal places.*

TRIP RATE for Land Use 03 - RESIDENTIAL/C - FLATS PRIVATELY OWNED
MULTI-MODAL Buses
Calculation factor: 1 DWELLS
BOLD print indicates peak (busiest) period

	ARRIVALS			DEPARTURES			TOTALS		
Time Range	No. Days	Ave. DWELLS	Trip Rate	No. Days	Ave. DWELLS	Trip Rate	No. Days	Ave. DWELLS	Trip Rate
00:00 - 01:00									
01:00 - 02:00									
02:00 - 03:00									
03:00 - 04:00									
04:00 - 05:00									
05:00 - 06:00									
06:00 - 07:00									
07:00 - 08:00									
08:00 - 09:00									
09:00 - 10:00									
10:00 - 11:00									
11:00 - 12:00									
12:00 - 13:00									
13:00 - 14:00									
14:00 - 15:00									
15:00 - 16:00									
16:00 - 17:00									
17:00 - 18:00									
18:00 - 19:00									
19:00 - 20:00									
20:00 - 21:00									
21:00 - 22:00									
22:00 - 23:00									
23:00 - 24:00									
Total Rates:			0.000			0.000			0.000

This section displays the trip rate results based on the selected set of surveys and the selected count type (shown just above the table). It is split by three main columns, representing arrivals trips, departures trips, and total trips (arrivals plus departures). Within each of these main columns are three sub-columns. These display the number of survey days where count data is included (per time period), the average value of the selected trip rate calculation parameter (per time period), and the trip rate result (per time period). Total trip rates (the sum of the column) are also displayed at the foot of the table.

*To obtain a trip rate, the average (mean) trip rate parameter value (TRP) is first calculated for all selected survey days that have count data available for the stated time period. The average (mean) number of arrivals, departures or totals (whichever applies) is also calculated (COUNT) for all selected survey days that have count data available for the stated time period. Then, the average count is divided by the average trip rate parameter value, and multiplied by the stated calculation factor (shown just above the table and abbreviated here as FACT). So, the method is: COUNT/TRP*FACT. Trip rates are then rounded to 3 decimal places.*

TRIP RATE for Land Use 03 - RESIDENTIAL/C - FLATS PRIVATELY OWNED
MULTI-MODAL Non-Motorised Vehicles (NMV)
Calculation factor: 1 DWELLS
BOLD print indicates peak (busiest) period

	ARRIVALS			DEPARTURES			TOTALS		
Time Range	No. Days	Ave. DWELLS	Trip Rate	No. Days	Ave. DWELLS	Trip Rate	No. Days	Ave. DWELLS	Trip Rate
00:00 - 01:00									
01:00 - 02:00									
02:00 - 03:00									
03:00 - 04:00									
04:00 - 05:00									
05:00 - 06:00									
06:00 - 07:00									
07:00 - 08:00									
08:00 - 09:00									
09:00 - 10:00									
10:00 - 11:00									
11:00 - 12:00									
12:00 - 13:00									
13:00 - 14:00									
14:00 - 15:00									
15:00 - 16:00									
16:00 - 17:00									
17:00 - 18:00									
18:00 - 19:00									
19:00 - 20:00									
20:00 - 21:00									
21:00 - 22:00									
22:00 - 23:00									
23:00 - 24:00									
Total Rates:			0.000			0.000			0.000

This section displays the trip rate results based on the selected set of surveys and the selected count type (shown just above the table). It is split by three main columns, representing arrivals trips, departures trips, and total trips (arrivals plus departures). Within each of these main columns are three sub-columns. These display the number of survey days where count data is included (per time period), the average value of the selected trip rate calculation parameter (per time period), and the trip rate result (per time period). Total trip rates (the sum of the column) are also displayed at the foot of the table.

*To obtain a trip rate, the average (mean) trip rate parameter value (TRP) is first calculated for all selected survey days that have count data available for the stated time period. The average (mean) number of arrivals, departures or totals (whichever applies) is also calculated (COUNT) for all selected survey days that have count data available for the stated time period. Then, the average count is divided by the average trip rate parameter value, and multiplied by the stated calculation factor (shown just above the table and abbreviated here as FACT). So, the method is: COUNT/TRP*FACT. Trip rates are then rounded to 3 decimal places.*

TRIP RATE for Land Use 03 - RESIDENTIAL/C - FLATS PRIVATELY OWNED
MULTI-MODAL Cycles
Calculation factor: 1 DWELLS
BOLD print indicates peak (busiest) period

	ARRIVALS			DEPARTURES			TOTALS		
Time Range	No. Days	Ave. DWELLS	Trip Rate	No. Days	Ave. DWELLS	Trip Rate	No. Days	Ave. DWELLS	Trip Rate
00:00 - 01:00									
01:00 - 02:00									
02:00 - 03:00									
03:00 - 04:00									
04:00 - 05:00									
05:00 - 06:00									
06:00 - 07:00									
07:00 - 08:00									
08:00 - 09:00									
09:00 - 10:00									
10:00 - 11:00									
11:00 - 12:00									
12:00 - 13:00									
13:00 - 14:00									
14:00 - 15:00									
15:00 - 16:00									
16:00 - 17:00									
17:00 - 18:00									
18:00 - 19:00									
19:00 - 20:00									
20:00 - 21:00									
21:00 - 22:00									
22:00 - 23:00									
23:00 - 24:00									
Total Rates:			0.000			0.000			0.000

This section displays the trip rate results based on the selected set of surveys and the selected count type (shown just above the table). It is split by three main columns, representing arrivals trips, departures trips, and total trips (arrivals plus departures). Within each of these main columns are three sub-columns. These display the number of survey days where count data is included (per time period), the average value of the selected trip rate calculation parameter (per time period), and the trip rate result (per time period). Total trip rates (the sum of the column) are also displayed at the foot of the table.

*To obtain a trip rate, the average (mean) trip rate parameter value (TRP) is first calculated for all selected survey days that have count data available for the stated time period. The average (mean) number of arrivals, departures or totals (whichever applies) is also calculated (COUNT) for all selected survey days that have count data available for the stated time period. Then, the average count is divided by the average trip rate parameter value, and multiplied by the stated calculation factor (shown just above the table and abbreviated here as FACT). So, the method is: COUNT/TRP*FACT. Trip rates are then rounded to 3 decimal places.*

TRIP RATE for Land Use 03 - RESIDENTIAL/C - FLATS PRIVATELY OWNED
MULTI-MODAL Scooters
Calculation factor: 1 DWELLS
BOLD print indicates peak (busiest) period

	ARRIVALS			DEPARTURES			TOTALS		
Time Range	No. Days	Ave. DWELLS	Trip Rate	No. Days	Ave. DWELLS	Trip Rate	No. Days	Ave. DWELLS	Trip Rate
00:00 - 01:00									
01:00 - 02:00									
02:00 - 03:00									
03:00 - 04:00									
04:00 - 05:00									
05:00 - 06:00									
06:00 - 07:00									
07:00 - 08:00									
08:00 - 09:00									
09:00 - 10:00									
10:00 - 11:00									
11:00 - 12:00									
12:00 - 13:00									
13:00 - 14:00									
14:00 - 15:00									
15:00 - 16:00									
16:00 - 17:00									
17:00 - 18:00									
18:00 - 19:00									
19:00 - 20:00									
20:00 - 21:00									
21:00 - 22:00									
22:00 - 23:00									
23:00 - 24:00									
Total Rates:			0.000			0.000			0.000

This section displays the trip rate results based on the selected set of surveys and the selected count type (shown just above the table). It is split by three main columns, representing arrivals trips, departures trips, and total trips (arrivals plus departures). Within each of these main columns are three sub-columns. These display the number of survey days where count data is included (per time period), the average value of the selected trip rate calculation parameter (per time period), and the trip rate result (per time period). Total trip rates (the sum of the column) are also displayed at the foot of the table.

*To obtain a trip rate, the average (mean) trip rate parameter value (TRP) is first calculated for all selected survey days that have count data available for the stated time period. The average (mean) number of arrivals, departures or totals (whichever applies) is also calculated (COUNT) for all selected survey days that have count data available for the stated time period. Then, the average count is divided by the average trip rate parameter value, and multiplied by the stated calculation factor (shown just above the table and abbreviated here as FACT). So, the method is: COUNT/TRP*FACT. Trip rates are then rounded to 3 decimal places.*

TRIP RATE for Land Use 03 - RESIDENTIAL/C - FLATS PRIVATELY OWNED
MULTI-MODAL Non-Vehicular People Movements (NVPM)
Calculation factor: 1 DWELLS
BOLD print indicates peak (busiest) period

	ARRIVALS			DEPARTURES			TOTALS		
Time Range	No. Days	Ave. DWELLS	Trip Rate	No. Days	Ave. DWELLS	Trip Rate	No. Days	Ave. DWELLS	Trip Rate
00:00 - 01:00									
01:00 - 02:00									
02:00 - 03:00									
03:00 - 04:00									
04:00 - 05:00									
05:00 - 06:00									
06:00 - 07:00									
07:00 - 08:00									
08:00 - 09:00									
09:00 - 10:00									
10:00 - 11:00									
11:00 - 12:00									
12:00 - 13:00									
13:00 - 14:00									
14:00 - 15:00									
15:00 - 16:00									
16:00 - 17:00									
17:00 - 18:00									
18:00 - 19:00									
19:00 - 20:00									
20:00 - 21:00									
21:00 - 22:00									
22:00 - 23:00									
23:00 - 24:00									
Total Rates:			0.000			0.000			0.000

This section displays the trip rate results based on the selected set of surveys and the selected count type (shown just above the table). It is split by three main columns, representing arrivals trips, departures trips, and total trips (arrivals plus departures). Within each of these main columns are three sub-columns. These display the number of survey days where count data is included (per time period), the average value of the selected trip rate calculation parameter (per time period), and the trip rate result (per time period). Total trip rates (the sum of the column) are also displayed at the foot of the table.

*To obtain a trip rate, the average (mean) trip rate parameter value (TRP) is first calculated for all selected survey days that have count data available for the stated time period. The average (mean) number of arrivals, departures or totals (whichever applies) is also calculated (COUNT) for all selected survey days that have count data available for the stated time period. Then, the average count is divided by the average trip rate parameter value, and multiplied by the stated calculation factor (shown just above the table and abbreviated here as FACT). So, the method is: COUNT/TRP*FACT. Trip rates are then rounded to 3 decimal places.*

Calculation Reference: AUDIT-706701-200608-0611

TRIP RATE CALCULATION SELECTION PARAMETERS:

Land Use : 05 - HEALTH
Category : G - GP SURGERIES
MULTI-MODAL VEHICLES

Selected regions and areas:
01 GREATER LONDON
WH WANDSWORTH 1 days

This section displays the number of survey days per TRICS® sub-region in the selected set

Primary Filtering selection:

This data displays the chosen trip rate parameter and its selected range. Only sites that fall within the parameter range are included in the trip rate calculation.

Parameter: Gross floor area
Actual Range: 2709 to 2709 (units: sqm)
Range Selected by User: 2709 to 2709 (units: sqm)

Parking Spaces Range: All Surveys Included

Public Transport Provision:
Selection by: Include all surveys

Date Range: 01/01/12 to 12/11/13

This data displays the range of survey dates selected. Only surveys that were conducted within this date range are included in the trip rate calculation.

Selected survey days:
Tuesday 1 days

This data displays the number of selected surveys by day of the week.

Selected survey types:
Manual count 1 days
Directional ATC Count 0 days

This data displays the number of manual classified surveys and the number of unclassified ATC surveys, the total adding up to the overall number of surveys in the selected set. Manual surveys are undertaken using staff, whilst ATC surveys are undertaking using machines.

Selected Locations:
Town Centre 1

This data displays the number of surveys per main location category within the selected set. The main location categories consist of Free Standing, Edge of Town, Suburban Area, Neighbourhood Centre, Edge of Town Centre, Town Centre and Not Known.

Selected Location Sub Categories:
Retail Zone 1

This data displays the number of surveys per location sub-category within the selected set. The location sub-categories consist of Commercial Zone, Industrial Zone, Development Zone, Residential Zone, Retail Zone, Built-Up Zone, Village, Out of Town, High Street and No Sub Category.

Secondary Filtering selection:

Use Class:
D1 1 days

This data displays the number of surveys per Use Class classification within the selected set. The Use Classes Order 2005 has been used for this purpose, which can be found within the Library module of TRICS®.

Population within 1 mile:
50,001 to 100,000 1 days

This data displays the number of selected surveys within stated 1-mile radii of population.

Secondary Filtering selection (Cont.):

Population within 5 miles:
500,001 or More 1 days

This data displays the number of selected surveys within stated 5-mile radii of population.

Car ownership within 5 miles:
0.6 to 1.0 1 days

This data displays the number of selected surveys within stated ranges of average cars owned per residential dwelling, within a radius of 5-miles of selected survey sites.

Travel Plan:
No 1 days

This data displays the number of surveys within the selected set that were undertaken at sites with Travel Plans in place, and the number of surveys that were undertaken at sites without Travel Plans.

PTAL Rating:
4 Good 1 days

This data displays the number of selected surveys with PTAL Ratings.

LIST OF SITES relevant to selection parameters

1 WH-05-G-01 MEDICAL CENTRE WANDSWORTH
GARRATT LANE
WANDSWORTH

Town Centre
Retail Zone
Total Gross floor area: 2709 sqm
Survey date: TUESDAY *12/11/13* *Survey Type: MANUAL*

This section provides a list of all survey sites and days in the selected set. For each individual survey site, it displays a unique site reference code and site address, the selected trip rate calculation parameter and its value, the day of the week and date of each survey, and whether the survey was a manual classified count or an ATC count.

TRIP RATE for Land Use 05 - HEALTH/G - GP SURGERIES
MULTI-MODAL VEHICLES
Calculation factor: 100 sqm
BOLD print indicates peak (busiest) period

	ARRIVALS			DEPARTURES			TOTALS		
Time Range	No. Days	Ave. GFA	Trip Rate	No. Days	Ave. GFA	Trip Rate	No. Days	Ave. GFA	Trip Rate
00:00 - 01:00									
01:00 - 02:00									
02:00 - 03:00									
03:00 - 04:00									
04:00 - 05:00									
05:00 - 06:00									
06:00 - 07:00									
07:00 - 08:00	1	2709	0.111	1	2709	0.074	1	2709	0.185
08:00 - 09:00	1	2709	0.258	1	2709	0.074	1	2709	0.332
09:00 - 10:00	1	2709	0.148	1	2709	0.037	1	2709	0.185
10:00 - 11:00	1	2709	0.074	1	2709	0.074	1	2709	0.148
11:00 - 12:00	1	2709	0.111	1	2709	0.148	1	2709	0.259
12:00 - 13:00	1	2709	0.221	1	2709	0.258	1	2709	0.479
13:00 - 14:00	1	2709	0.148	1	2709	0.258	1	2709	0.406
14:00 - 15:00	1	2709	0.185	1	2709	0.148	1	2709	0.333
15:00 - 16:00	1	2709	0.185	1	2709	0.258	1	2709	0.443
16:00 - 17:00	1	2709	0.332	1	2709	0.185	1	2709	0.517
17:00 - 18:00	1	2709	0.221	1	2709	0.258	1	2709	0.479
18:00 - 19:00	1	2709	0.111	1	2709	0.148	1	2709	0.259
19:00 - 20:00									
20:00 - 21:00									
21:00 - 22:00									
22:00 - 23:00									
23:00 - 24:00									
Total Rates:			2.105			1.920			4.025

This section displays the trip rate results based on the selected set of surveys and the selected count type (shown just above the table). It is split by three main columns, representing arrivals trips, departures trips, and total trips (arrivals plus departures). Within each of these main columns are three sub-columns. These display the number of survey days where count data is included (per time period), the average value of the selected trip rate calculation parameter (per time period), and the trip rate result (per time period). Total trip rates (the sum of the column) are also displayed at the foot of the table.

*To obtain a trip rate, the average (mean) trip rate parameter value (TRP) is first calculated for all selected survey days that have count data available for the stated time period. The average (mean) number of arrivals, departures or totals (whichever applies) is also calculated (COUNT) for all selected survey days that have count data available for the stated time period. Then, the average count is divided by the average trip rate parameter value, and multiplied by the stated calculation factor (shown just above the table and abbreviated here as FACT). So, the method is: COUNT/TRP*FACT. Trip rates are then rounded to 3 decimal places.*

The survey data, graphs and all associated supporting information, contained within the TRICS Database are published by TRICS Consortium Limited ("the Company") and the Company claims copyright and database rights in this published work. The Company authorises those who possess a current TRICS licence to access the TRICS Database and copy the data contained within the TRICS Database for the licence holders' use only. Any resulting copy must retain all copyrights and other proprietary notices, and any disclaimer contained thereon.

The Company accepts no responsibility for loss which may arise from reliance on data contained in the TRICS Database. [No warranty of any kind, express or implied, is made as to the data contained in the TRICS Database.]

Parameter summary

Trip rate parameter range selected:	2709 - 2709 (units: sqm)
Survey date date range:	01/01/12 - 12/11/13
Number of weekdays (Monday-Friday):	1
Number of Saturdays:	0
Number of Sundays:	0
Surveys automatically removed from selection:	0
Surveys manually removed from selection:	0

This section displays a quick summary of some of the data filtering selections made by the TRICS® user. The trip rate calculation parameter range of all selected surveys is displayed first, followed by the range of minimum and maximum survey dates selected by the user. Then, the total number of selected weekdays and weekend days in the selected set of surveys are show. Finally, the number of survey days that have been manually removed from the selected set outside of the standard filtering procedure are displayed.

TRIP RATE for Land Use 05 - HEALTH/G - GP SURGERIES
MULTI-MODAL TAXIS
Calculation factor: 100 sqm
BOLD print indicates peak (busiest) period

	ARRIVALS			DEPARTURES			TOTALS		
Time Range	No. Days	Ave. GFA	Trip Rate	No. Days	Ave. GFA	Trip Rate	No. Days	Ave. GFA	Trip Rate
00:00 - 01:00									
01:00 - 02:00									
02:00 - 03:00									
03:00 - 04:00									
04:00 - 05:00									
05:00 - 06:00									
06:00 - 07:00									
07:00 - 08:00	1	2709	0.000	1	2709	0.000	1	2709	0.000
08:00 - 09:00	1	2709	0.037	1	2709	0.037	1	2709	0.074
09:00 - 10:00	1	2709	0.000	1	2709	0.000	1	2709	0.000
10:00 - 11:00	1	2709	0.000	1	2709	0.000	1	2709	0.000
11:00 - 12:00	1	2709	0.000	1	2709	0.000	1	2709	0.000
12:00 - 13:00	1	2709	0.037	1	2709	0.037	1	2709	0.074
13:00 - 14:00	1	2709	0.037	1	2709	0.037	1	2709	0.074
14:00 - 15:00	1	2709	0.000	1	2709	0.000	1	2709	0.000
15:00 - 16:00	1	2709	0.000	1	2709	0.000	1	2709	0.000
16:00 - 17:00	1	2709	0.037	1	2709	0.037	1	2709	0.074
17:00 - 18:00	1	2709	0.037	1	2709	0.037	1	2709	0.074
18:00 - 19:00	1	2709	0.000	1	2709	0.000	1	2709	0.000
19:00 - 20:00									
20:00 - 21:00									
21:00 - 22:00									
22:00 - 23:00									
23:00 - 24:00									
Total Rates:			0.185			0.185			0.370

This section displays the trip rate results based on the selected set of surveys and the selected count type (shown just above the table). It is split by three main columns, representing arrivals trips, departures trips, and total trips (arrivals plus departures). Within each of these main columns are three sub-columns. These display the number of survey days where count data is included (per time period), the average value of the selected trip rate calculation parameter (per time period), and the trip rate result (per time period). Total trip rates (the sum of the column) are also displayed at the foot of the table.

*To obtain a trip rate, the average (mean) trip rate parameter value (TRP) is first calculated for all selected survey days that have count data available for the stated time period. The average (mean) number of arrivals, departures or totals (whichever applies) is also calculated (COUNT) for all selected survey days that have count data available for the stated time period. Then, the average count is divided by the average trip rate parameter value, and multiplied by the stated calculation factor (shown just above the table and abbreviated here as FACT). So, the method is: COUNT/TRP*FACT. Trip rates are then rounded to 3 decimal places.*

TRIP RATE for Land Use 05 - HEALTH/G - GP SURGERIES
MULTI-MODAL CYCLISTS
Calculation factor: 100 sqm
BOLD print indicates peak (busiest) period

	ARRIVALS			DEPARTURES			TOTALS		
Time Range	No. Days	Ave. GFA	Trip Rate	No. Days	Ave. GFA	Trip Rate	No. Days	Ave. GFA	Trip Rate
00:00 - 01:00									
01:00 - 02:00									
02:00 - 03:00									
03:00 - 04:00									
04:00 - 05:00									
05:00 - 06:00									
06:00 - 07:00									
07:00 - 08:00	1	2709	0.037	1	2709	0.000	1	2709	0.037
08:00 - 09:00	1	2709	0.000	1	2709	0.037	1	2709	0.037
09:00 - 10:00	1	2709	0.037	1	2709	0.000	1	2709	0.037
10:00 - 11:00	1	2709	0.037	1	2709	0.037	1	2709	0.074
11:00 - 12:00	1	2709	0.000	1	2709	0.000	1	2709	0.000
12:00 - 13:00	1	2709	0.037	1	2709	0.037	1	2709	0.074
13:00 - 14:00	1	2709	0.000	1	2709	0.000	1	2709	0.000
14:00 - 15:00	1	2709	0.000	1	2709	0.000	1	2709	0.000
15:00 - 16:00	1	2709	0.000	1	2709	0.037	1	2709	0.037
16:00 - 17:00	1	2709	0.074	1	2709	0.074	1	2709	0.148
17:00 - 18:00	1	2709	0.111	1	2709	0.074	1	2709	0.185
18:00 - 19:00	1	2709	0.000	1	2709	0.037	1	2709	0.037
19:00 - 20:00									
20:00 - 21:00									
21:00 - 22:00									
22:00 - 23:00									
23:00 - 24:00									
Total Rates:			0.333			0.333			0.666

This section displays the trip rate results based on the selected set of surveys and the selected count type (shown just above the table). It is split by three main columns, representing arrivals trips, departures trips, and total trips (arrivals plus departures). Within each of these main columns are three sub-columns. These display the number of survey days where count data is included (per time period), the average value of the selected trip rate calculation parameter (per time period), and the trip rate result (per time period). Total trip rates (the sum of the column) are also displayed at the foot of the table.

*To obtain a trip rate, the average (mean) trip rate parameter value (TRP) is first calculated for all selected survey days that have count data available for the stated time period. The average (mean) number of arrivals, departures or totals (whichever applies) is also calculated (COUNT) for all selected survey days that have count data available for the stated time period. Then, the average count is divided by the average trip rate parameter value, and multiplied by the stated calculation factor (shown just above the table and abbreviated here as FACT). So, the method is: COUNT/TRP*FACT. Trip rates are then rounded to 3 decimal places.*

TRIP RATE for Land Use 05 - HEALTH/G - GP SURGERIES
MULTI-MODAL VEHICLE OCCUPANTS
Calculation factor: 100 sqm
BOLD print indicates peak (busiest) period

	ARRIVALS			DEPARTURES			TOTALS		
Time Range	No. Days	Ave. GFA	Trip Rate	No. Days	Ave. GFA	Trip Rate	No. Days	Ave. GFA	Trip Rate
00:00 - 01:00									
01:00 - 02:00									
02:00 - 03:00									
03:00 - 04:00									
04:00 - 05:00									
05:00 - 06:00									
06:00 - 07:00									
07:00 - 08:00	1	2709	0.111	1	2709	0.074	1	2709	0.185
08:00 - 09:00	1	2709	0.258	1	2709	0.074	1	2709	0.332
09:00 - 10:00	1	2709	0.258	1	2709	0.037	1	2709	0.295
10:00 - 11:00	1	2709	0.221	1	2709	0.185	1	2709	0.406
11:00 - 12:00	1	2709	0.185	1	2709	0.369	1	2709	0.554
12:00 - 13:00	1	2709	0.258	1	2709	0.295	1	2709	0.553
13:00 - 14:00	1	2709	0.185	1	2709	0.258	1	2709	0.443
14:00 - 15:00	1	2709	0.295	1	2709	0.148	1	2709	0.443
15:00 - 16:00	1	2709	0.258	1	2709	0.332	1	2709	0.590
16:00 - 17:00	1	2709	0.369	1	2709	0.221	1	2709	0.590
17:00 - 18:00	1	2709	0.221	1	2709	0.295	1	2709	0.516
18:00 - 19:00	1	2709	0.111	1	2709	0.148	1	2709	0.259
19:00 - 20:00									
20:00 - 21:00									
21:00 - 22:00									
22:00 - 23:00									
23:00 - 24:00									
Total Rates:			2.730			2.436			5.166

This section displays the trip rate results based on the selected set of surveys and the selected count type (shown just above the table). It is split by three main columns, representing arrivals trips, departures trips, and total trips (arrivals plus departures). Within each of these main columns are three sub-columns. These display the number of survey days where count data is included (per time period), the average value of the selected trip rate calculation parameter (per time period), and the trip rate result (per time period). Total trip rates (the sum of the column) are also displayed at the foot of the table.

*To obtain a trip rate, the average (mean) trip rate parameter value (TRP) is first calculated for all selected survey days that have count data available for the stated time period. The average (mean) number of arrivals, departures or totals (whichever applies) is also calculated (COUNT) for all selected survey days that have count data available for the stated time period. Then, the average count is divided by the average trip rate parameter value, and multiplied by the stated calculation factor (shown just above the table and abbreviated here as FACT). So, the method is: COUNT/TRP*FACT. Trip rates are then rounded to 3 decimal places.*

TRIP RATE for Land Use 05 - HEALTH/G - GP SURGERIES
MULTI-MODAL PEDESTRIANS
Calculation factor: 100 sqm
BOLD print indicates peak (busiest) period

	ARRIVALS			DEPARTURES			TOTALS		
Time Range	No. Days	Ave. GFA	Trip Rate	No. Days	Ave. GFA	Trip Rate	No. Days	Ave. GFA	Trip Rate
00:00 - 01:00									
01:00 - 02:00									
02:00 - 03:00									
03:00 - 04:00									
04:00 - 05:00									
05:00 - 06:00									
06:00 - 07:00									
07:00 - 08:00	1	2709	0.148	1	2709	0.000	1	2709	0.148
08:00 - 09:00	1	2709	0.849	1	2709	0.185	1	2709	1.034
09:00 - 10:00	1	2709	1.034	1	2709	0.849	1	2709	1.883
10:00 - 11:00	1	2709	1.071	1	2709	0.480	1	2709	1.551
11:00 - 12:00	1	2709	0.738	1	2709	0.812	1	2709	1.550
12:00 - 13:00	1	2709	0.332	1	2709	0.701	1	2709	1.033
13:00 - 14:00	1	2709	1.107	1	2709	0.849	1	2709	1.956
14:00 - 15:00	1	2709	0.812	1	2709	0.997	1	2709	1.809
15:00 - 16:00	1	2709	0.664	1	2709	0.628	1	2709	1.292
16:00 - 17:00	1	2709	0.701	1	2709	1.403	1	2709	2.104
17:00 - 18:00	1	2709	0.332	1	2709	0.591	1	2709	0.923
18:00 - 19:00	1	2709	0.221	1	2709	0.185	1	2709	0.406
19:00 - 20:00									
20:00 - 21:00									
21:00 - 22:00									
22:00 - 23:00									
23:00 - 24:00									
Total Rates:			8.009			7.680			15.689

This section displays the trip rate results based on the selected set of surveys and the selected count type (shown just above the table). It is split by three main columns, representing arrivals trips, departures trips, and total trips (arrivals plus departures). Within each of these main columns are three sub-columns. These display the number of survey days where count data is included (per time period), the average value of the selected trip rate calculation parameter (per time period), and the trip rate result (per time period). Total trip rates (the sum of the column) are also displayed at the foot of the table.

*To obtain a trip rate, the average (mean) trip rate parameter value (TRP) is first calculated for all selected survey days that have count data available for the stated time period. The average (mean) number of arrivals, departures or totals (whichever applies) is also calculated (COUNT) for all selected survey days that have count data available for the stated time period. Then, the average count is divided by the average trip rate parameter value, and multiplied by the stated calculation factor (shown just above the table and abbreviated here as FACT). So, the method is: COUNT/TRP*FACT. Trip rates are then rounded to 3 decimal places.*

TRIP RATE for Land Use 05 - HEALTH/G - GP SURGERIES
MULTI-MODAL BUS/TRAM PASSENGERS
Calculation factor: 100 sqm
BOLD print indicates peak (busiest) period

	ARRIVALS			DEPARTURES			TOTALS		
Time Range	No. Days	Ave. GFA	Trip Rate	No. Days	Ave. GFA	Trip Rate	No. Days	Ave. GFA	Trip Rate
00:00 - 01:00									
01:00 - 02:00									
02:00 - 03:00									
03:00 - 04:00									
04:00 - 05:00									
05:00 - 06:00									
06:00 - 07:00									
07:00 - 08:00	1	2709	0.111	1	2709	0.037	1	2709	0.148
08:00 - 09:00	1	2709	0.111	1	2709	0.000	1	2709	0.111
09:00 - 10:00	1	2709	0.037	1	2709	0.037	1	2709	0.074
10:00 - 11:00	1	2709	0.037	1	2709	0.000	1	2709	0.037
11:00 - 12:00	1	2709	0.000	1	2709	0.000	1	2709	0.000
12:00 - 13:00	1	2709	0.332	1	2709	0.185	1	2709	0.517
13:00 - 14:00	1	2709	0.148	1	2709	0.074	1	2709	0.222
14:00 - 15:00	1	2709	0.037	1	2709	0.037	1	2709	0.074
15:00 - 16:00	1	2709	0.037	1	2709	0.148	1	2709	0.185
16:00 - 17:00	1	2709	0.258	1	2709	0.258	1	2709	0.516
17:00 - 18:00	1	2709	0.037	1	2709	0.295	1	2709	0.332
18:00 - 19:00	1	2709	0.074	1	2709	0.074	1	2709	0.148
19:00 - 20:00									
20:00 - 21:00									
21:00 - 22:00									
22:00 - 23:00									
23:00 - 24:00									
Total Rates:			1.219			1.145			2.364

This section displays the trip rate results based on the selected set of surveys and the selected count type (shown just above the table). It is split by three main columns, representing arrivals trips, departures trips, and total trips (arrivals plus departures). Within each of these main columns are three sub-columns. These display the number of survey days where count data is included (per time period), the average value of the selected trip rate calculation parameter (per time period), and the trip rate result (per time period). Total trip rates (the sum of the column) are also displayed at the foot of the table.

*To obtain a trip rate, the average (mean) trip rate parameter value (TRP) is first calculated for all selected survey days that have count data available for the stated time period. The average (mean) number of arrivals, departures or totals (whichever applies) is also calculated (COUNT) for all selected survey days that have count data available for the stated time period. Then, the average count is divided by the average trip rate parameter value, and multiplied by the stated calculation factor (shown just above the table and abbreviated here as FACT). So, the method is: COUNT/TRP*FACT. Trip rates are then rounded to 3 decimal places.*

TRIP RATE for Land Use 05 - HEALTH/G - GP SURGERIES
MULTI-MODAL TOTAL RAIL PASSENGERS
Calculation factor: 100 sqm
BOLD print indicates peak (busiest) period

	ARRIVALS			DEPARTURES			TOTALS		
Time Range	No. Days	Ave. GFA	Trip Rate	No. Days	Ave. GFA	Trip Rate	No. Days	Ave. GFA	Trip Rate
00:00 - 01:00									
01:00 - 02:00									
02:00 - 03:00									
03:00 - 04:00									
04:00 - 05:00									
05:00 - 06:00									
06:00 - 07:00									
07:00 - 08:00	1	2709	0.000	1	2709	0.000	1	2709	0.000
08:00 - 09:00	1	2709	0.000	1	2709	0.000	1	2709	0.000
09:00 - 10:00	1	2709	0.000	1	2709	0.000	1	2709	0.000
10:00 - 11:00	1	2709	0.000	1	2709	0.000	1	2709	0.000
11:00 - 12:00	1	2709	0.000	1	2709	0.000	1	2709	0.000
12:00 - 13:00	1	2709	0.111	1	2709	0.037	1	2709	0.148
13:00 - 14:00	1	2709	0.000	1	2709	0.000	1	2709	0.000
14:00 - 15:00	1	2709	0.000	1	2709	0.000	1	2709	0.000
15:00 - 16:00	1	2709	0.000	1	2709	0.000	1	2709	0.000
16:00 - 17:00	1	2709	0.148	1	2709	0.111	1	2709	0.259
17:00 - 18:00	1	2709	0.000	1	2709	0.111	1	2709	0.111
18:00 - 19:00	1	2709	0.000	1	2709	0.000	1	2709	0.000
19:00 - 20:00									
20:00 - 21:00									
21:00 - 22:00									
22:00 - 23:00									
23:00 - 24:00									
Total Rates:			0.259			0.259			0.518

This section displays the trip rate results based on the selected set of surveys and the selected count type (shown just above the table). It is split by three main columns, representing arrivals trips, departures trips, and total trips (arrivals plus departures). Within each of these main columns are three sub-columns. These display the number of survey days where count data is included (per time period), the average value of the selected trip rate calculation parameter (per time period), and the trip rate result (per time period). Total trip rates (the sum of the column) are also displayed at the foot of the table.

*To obtain a trip rate, the average (mean) trip rate parameter value (TRP) is first calculated for all selected survey days that have count data available for the stated time period. The average (mean) number of arrivals, departures or totals (whichever applies) is also calculated (COUNT) for all selected survey days that have count data available for the stated time period. Then, the average count is divided by the average trip rate parameter value, and multiplied by the stated calculation factor (shown just above the table and abbreviated here as FACT). So, the method is: COUNT/TRP*FACT. Trip rates are then rounded to 3 decimal places.*

TRIP RATE for Land Use 05 - HEALTH/G - GP SURGERIES
MULTI-MODAL PUBLIC TRANSPORT USERS
Calculation factor: 100 sqm
BOLD print indicates peak (busiest) period

	ARRIVALS			DEPARTURES			TOTALS		
Time Range	No. Days	Ave. GFA	Trip Rate	No. Days	Ave. GFA	Trip Rate	No. Days	Ave. GFA	Trip Rate
00:00 - 01:00									
01:00 - 02:00									
02:00 - 03:00									
03:00 - 04:00									
04:00 - 05:00									
05:00 - 06:00									
06:00 - 07:00									
07:00 - 08:00	1	2709	0.111	1	2709	0.037	1	2709	0.148
08:00 - 09:00	1	2709	0.111	1	2709	0.000	1	2709	0.111
09:00 - 10:00	1	2709	0.037	1	2709	0.037	1	2709	0.074
10:00 - 11:00	1	2709	0.037	1	2709	0.000	1	2709	0.037
11:00 - 12:00	1	2709	0.000	1	2709	0.000	1	2709	0.000
12:00 - 13:00	1	2709	0.443	1	2709	0.221	1	2709	0.664
13:00 - 14:00	1	2709	0.148	1	2709	0.074	1	2709	0.222
14:00 - 15:00	1	2709	0.037	1	2709	0.037	1	2709	0.074
15:00 - 16:00	1	2709	0.037	1	2709	0.148	1	2709	0.185
16:00 - 17:00	1	2709	0.406	1	2709	0.369	1	2709	0.775
17:00 - 18:00	1	2709	0.037	1	2709	0.406	1	2709	0.443
18:00 - 19:00	1	2709	0.074	1	2709	0.074	1	2709	0.148
19:00 - 20:00									
20:00 - 21:00									
21:00 - 22:00									
22:00 - 23:00									
23:00 - 24:00									
Total Rates:			1.478			1.403			2.881

This section displays the trip rate results based on the selected set of surveys and the selected count type (shown just above the table). It is split by three main columns, representing arrivals trips, departures trips, and total trips (arrivals plus departures). Within each of these main columns are three sub-columns. These display the number of survey days where count data is included (per time period), the average value of the selected trip rate calculation parameter (per time period), and the trip rate result (per time period). Total trip rates (the sum of the column) are also displayed at the foot of the table.

*To obtain a trip rate, the average (mean) trip rate parameter value (TRP) is first calculated for all selected survey days that have count data available for the stated time period. The average (mean) number of arrivals, departures or totals (whichever applies) is also calculated (COUNT) for all selected survey days that have count data available for the stated time period. Then, the average count is divided by the average trip rate parameter value, and multiplied by the stated calculation factor (shown just above the table and abbreviated here as FACT). So, the method is: COUNT/TRP*FACT. Trip rates are then rounded to 3 decimal places.*

TRIP RATE for Land Use 05 - HEALTH/G - GP SURGERIES
MULTI-MODAL TOTAL PEOPLE
Calculation factor: 100 sqm
BOLD print indicates peak (busiest) period

	ARRIVALS			DEPARTURES			TOTALS		
Time Range	No. Days	Ave. GFA	Trip Rate	No. Days	Ave. GFA	Trip Rate	No. Days	Ave. GFA	Trip Rate
00:00 - 01:00									
01:00 - 02:00									
02:00 - 03:00									
03:00 - 04:00									
04:00 - 05:00									
05:00 - 06:00									
06:00 - 07:00									
07:00 - 08:00	1	2709	0.406	1	2709	0.111	1	2709	0.517
08:00 - 09:00	1	2709	1.218	1	2709	0.295	1	2709	1.513
09:00 - 10:00	1	2709	1.366	1	2709	0.923	1	2709	2.289
10:00 - 11:00	1	2709	1.366	1	2709	0.701	1	2709	2.067
11:00 - 12:00	1	2709	0.923	1	2709	1.181	1	2709	2.104
12:00 - 13:00	1	2709	1.071	1	2709	1.255	1	2709	2.326
13:00 - 14:00	1	2709	1.440	1	2709	1.181	1	2709	2.621
14:00 - 15:00	1	2709	1.144	1	2709	1.181	1	2709	2.325
15:00 - 16:00	1	2709	0.960	1	2709	1.144	1	2709	2.104
16:00 - 17:00	1	2709	1.550	1	2709	2.067	1	2709	3.617
17:00 - 18:00	1	2709	0.701	1	2709	1.366	1	2709	2.067
18:00 - 19:00	1	2709	0.406	1	2709	0.443	1	2709	0.849
19:00 - 20:00									
20:00 - 21:00									
21:00 - 22:00									
22:00 - 23:00									
23:00 - 24:00									
Total Rates:			12.551			11.848			24.399

This section displays the trip rate results based on the selected set of surveys and the selected count type (shown just above the table). It is split by three main columns, representing arrivals trips, departures trips, and total trips (arrivals plus departures). Within each of these main columns are three sub-columns. These display the number of survey days where count data is included (per time period), the average value of the selected trip rate calculation parameter (per time period), and the trip rate result (per time period). Total trip rates (the sum of the column) are also displayed at the foot of the table.

*To obtain a trip rate, the average (mean) trip rate parameter value (TRP) is first calculated for all selected survey days that have count data available for the stated time period. The average (mean) number of arrivals, departures or totals (whichever applies) is also calculated (COUNT) for all selected survey days that have count data available for the stated time period. Then, the average count is divided by the average trip rate parameter value, and multiplied by the stated calculation factor (shown just above the table and abbreviated here as FACT). So, the method is: COUNT/TRP*FACT. Trip rates are then rounded to 3 decimal places.*

TRIP RATE for Land Use 05 - HEALTH/G - GP SURGERIES
MULTI-MODAL LGVS
Calculation factor: 100 sqm
BOLD print indicates peak (busiest) period

	ARRIVALS			DEPARTURES			TOTALS		
Time Range	No. Days	Ave. GFA	Trip Rate	No. Days	Ave. GFA	Trip Rate	No. Days	Ave. GFA	Trip Rate
00:00 - 01:00									
01:00 - 02:00									
02:00 - 03:00									
03:00 - 04:00									
04:00 - 05:00									
05:00 - 06:00									
06:00 - 07:00									
07:00 - 08:00	1	2709	0.000	1	2709	0.000	1	2709	0.000
08:00 - 09:00	1	2709	0.000	1	2709	0.000	1	2709	0.000
09:00 - 10:00	1	2709	0.037	1	2709	0.037	1	2709	0.074
10:00 - 11:00	1	2709	0.037	1	2709	0.000	1	2709	0.037
11:00 - 12:00	1	2709	0.000	1	2709	0.037	1	2709	0.037
12:00 - 13:00	1	2709	0.000	1	2709	0.000	1	2709	0.000
13:00 - 14:00	1	2709	0.000	1	2709	0.000	1	2709	0.000
14:00 - 15:00	1	2709	0.074	1	2709	0.074	1	2709	0.148
15:00 - 16:00	1	2709	0.037	1	2709	0.037	1	2709	0.074
16:00 - 17:00	1	2709	0.037	1	2709	0.037	1	2709	0.074
17:00 - 18:00	1	2709	0.000	1	2709	0.000	1	2709	0.000
18:00 - 19:00	1	2709	0.000	1	2709	0.000	1	2709	0.000
19:00 - 20:00									
20:00 - 21:00									
21:00 - 22:00									
22:00 - 23:00									
23:00 - 24:00									
Total Rates:			0.222			0.222			0.444

This section displays the trip rate results based on the selected set of surveys and the selected count type (shown just above the table). It is split by three main columns, representing arrivals trips, departures trips, and total trips (arrivals plus departures). Within each of these main columns are three sub-columns. These display the number of survey days where count data is included (per time period), the average value of the selected trip rate calculation parameter (per time period), and the trip rate result (per time period). Total trip rates (the sum of the column) are also displayed at the foot of the table.

*To obtain a trip rate, the average (mean) trip rate parameter value (TRP) is first calculated for all selected survey days that have count data available for the stated time period. The average (mean) number of arrivals, departures or totals (whichever applies) is also calculated (COUNT) for all selected survey days that have count data available for the stated time period. Then, the average count is divided by the average trip rate parameter value, and multiplied by the stated calculation factor (shown just above the table and abbreviated here as FACT). So, the method is: COUNT/TRP*FACT. Trip rates are then rounded to 3 decimal places.*

TRIP RATE for Land Use 05 - HEALTH/G - GP SURGERIES
MULTI-MODAL MOTOR CYCLES
Calculation factor: 100 sqm
BOLD print indicates peak (busiest) period

	ARRIVALS			DEPARTURES			TOTALS		
Time Range	No. Days	Ave. GFA	Trip Rate	No. Days	Ave. GFA	Trip Rate	No. Days	Ave. GFA	Trip Rate
00:00 - 01:00									
01:00 - 02:00									
02:00 - 03:00									
03:00 - 04:00									
04:00 - 05:00									
05:00 - 06:00									
06:00 - 07:00									
07:00 - 08:00	1	2709	0.000	1	2709	0.000	1	2709	0.000
08:00 - 09:00	1	2709	0.037	1	2709	0.000	1	2709	0.037
09:00 - 10:00	1	2709	0.000	1	2709	0.000	1	2709	0.000
10:00 - 11:00	1	2709	0.000	1	2709	0.000	1	2709	0.000
11:00 - 12:00	1	2709	0.000	1	2709	0.000	1	2709	0.000
12:00 - 13:00	1	2709	0.000	1	2709	0.000	1	2709	0.000
13:00 - 14:00	1	2709	0.000	1	2709	0.037	1	2709	0.037
14:00 - 15:00	1	2709	0.000	1	2709	0.000	1	2709	0.000
15:00 - 16:00	1	2709	0.000	1	2709	0.000	1	2709	0.000
16:00 - 17:00	1	2709	0.000	1	2709	0.000	1	2709	0.000
17:00 - 18:00	1	2709	0.000	1	2709	0.000	1	2709	0.000
18:00 - 19:00	1	2709	0.000	1	2709	0.000	1	2709	0.000
19:00 - 20:00									
20:00 - 21:00									
21:00 - 22:00									
22:00 - 23:00									
23:00 - 24:00									
Total Rates:			0.037			0.037			0.074

This section displays the trip rate results based on the selected set of surveys and the selected count type (shown just above the table). It is split by three main columns, representing arrivals trips, departures trips, and total trips (arrivals plus departures). Within each of these main columns are three sub-columns. These display the number of survey days where count data is included (per time period), the average value of the selected trip rate calculation parameter (per time period), and the trip rate result (per time period). Total trip rates (the sum of the column) are also displayed at the foot of the table.

*To obtain a trip rate, the average (mean) trip rate parameter value (TRP) is first calculated for all selected survey days that have count data available for the stated time period. The average (mean) number of arrivals, departures or totals (whichever applies) is also calculated (COUNT) for all selected survey days that have count data available for the stated time period. Then, the average count is divided by the average trip rate parameter value, and multiplied by the stated calculation factor (shown just above the table and abbreviated here as FACT). So, the method is: COUNT/TRP*FACT. Trip rates are then rounded to 3 decimal places.*

Appendix L Delivery and Servicing Plan

217 High Street, Yiewsley

Outline Delivery and Servicing Plan

On behalf of **Taylor Wimpey West London**

Project Ref: 46187/5501 | Rev: B | Date: February 2020

Registered Office: Buckingham Court Kingsmead Business Park, London Road, High Wycombe, Buckinghamshire, HP11 1JU
Office Address: Caversham Bridge House, Waterman Place, Reading, Berkshire RG1 8DN
T: +44 (0)118 950 0761 E: PBA.Reading@stantec.com

Document Control Sheet

Project Name: **217 High Street, Yiewsley**

Project Ref: **46187 / 5501**

Report Title: **Outline Delivery and Servicing Plan**

Doc Ref: **005**

Date: **February 2020**

	Name	Position	Signature	Date
Prepared by:	Marcus Kingman	Graduate	MK	Feb 2020
Reviewed by:	Ellen Few	Transport Planner	EF	Feb 2020
Approved by:	Phil Brady	Director	PB	Feb 2020
For and on behalf of Stantec UK Limited				

Revision	Date	Description	Prepared	Reviewed	Approved
A	24/02/2020	Draft	MK	EF	PB
B	26/02/2020	Final	MK	EF	PB

This report has been prepared by Stantec UK Limited ('Stantec') on behalf of its client to whom this report is addressed ('Client') in connection with the project described in this report and takes into account the Client's particular instructions and requirements. This report was prepared in accordance with the professional services appointment under which Stantec was appointed by its Client. This report is not intended for and should not be relied on by any third party (i.e. parties other than the Client). Stantec accepts no duty or responsibility (including in negligence) to any party other than the Client and disclaims all liability of any nature whatsoever to any such party in respect of this report.

Contents

1 Introduction 1
1.1 Preamble 1
1.2 Site Background 1
1.3 Development Proposals 2
1.4 Objectives of the DSP 2
2 Proposed Delivery and Servicing Strategy 3
2.1 Residential Strategy 3
2.2 Health Facility Strategy 4
3 Delivery and Servicing Trip Generation 5
4 DSP Management Measures 1
4.1 Managing Deliveries 1
4.2 Waste Management 1
4.3 Reducing Servicing Trips 1
4.4 Enforcement 1
5 Review, Management and Monitoring 2
5.1 DSP Review 2
5.2 DSP Management, Monitoring and Compliance 2

Figures

Figure 1.1: Site Location 2
Figure 1.2: Residential Refuse Collection Strategy 4
Figure 4.1: Location of Collect Plus Collection Points to Site Location ... **Error! Bookmark not defined.**

Tables

Table 1.1: Residential Delivery and Servicing Trip Generation 5
Table 1.2: Vehicle Types and Dwell Times 6

Appendices

Appendix A Stantec Drawing 46187/5501/SK004B

This page is intentionally blank

1 Introduction

1.1 Preamble

1.1.1 Stantec have been commissioned by Taylor Wimpey West London (TWWL) to prepare this Delivery and Servicing Plan (DSP) in support of the development at 217 High Street, Yiewsley, in The London Borough of Hillingdon (LBH).

1.1.2 This DSP aims to ensure that servicing of the development can be carried out in a legal, efficient and safe manner, without creating any detrimental impacts on the local highway network, local residents and the occupiers within the development site.

1.1.3 In accordance with Transport for London's (TfL) best practice guidance contained within their document entitled 'Managing Freight Effectively: Delivery and Servicing Plans' this DSP will cover:

- Design and Access;
- Procurement Strategy;
- Operational Efficiency; and
- Waste and Recycling Management.

1.1.4 It is envisaged that a detailed DSP will be produced as part of the discharge of conditions to provide a more detailed assessment of the delivery and servicing arrangements for the development once completed.

1.2 Site Background

1.2.1 The site is currently in use as a retail warehouse of 33,072sqft of floor space with associated parking and a MOT testing and repair centre of 15,153sqft to the rear of the site. The proposed development comprises of 235 residential apartments and a 10,000sqft D1 Heath Facility.

1.2.2 The site is located immediately to the west of the A408 High Street as illustrated in **Figure 1.1**. The site is bound by the Grand Union Canal along the western boundary, the River Pinn to the north and petrol filling station and Tesco superstore to the south.

Figure 1.1: Site Location



1.3 Development Proposals

1.3.1 The proposals are for the erection of 5 and 6 storey buildings to provide a 10,000sqft D1 Health Facility and 235 residential apartments with associated parking, communal podium garden, landscaping, pedestrian and cycle canal link and external works following the demolition of the existing buildings on site at 217 High Street, Yiewsley.

1.3.2 The site will provide high quality homes maximising the sustainable location of the site with a pedestrian / cycle link through the site connecting the high street to the Grand Union Canal. Additionally, the proposals include green space through podium and play areas and create a healthy streets environment which maximise opportunities for pedestrian and cyclists.

1.4 Objectives of the DSP

1.4.1 In line with the TfL guidance this DSP will seek to achieve the following objectives:

- Demonstrate that goods and services can be delivered, waste removed, in a safe, efficient and environmental friendly way
- Identify deliveries that could be reduced, retimed or consolidated particularly during busy periods;
- Improve the reliability of deliveries to the site
- Reduce the operating costs of building occupants and freight companies
- Reduce the impact of freight activity on local residents

2 Proposed Delivery and Servicing Strategy

2.1 Residential Strategy

2.1.1 Deliveries, servicing and waste collection will take place on street, as they do in residential areas across the majority of London. Delivery vehicles will enter the site from the High Street and use the internal access road and unload/ load on street adjacent to the residential buildings.

2.1.2 Through the development of this scheme, the access road has been designed to accommodate service vehicles up to 12m including refuse vehicles and fire tender vehicles for emergency access.

2.1.3 Residential waste collection will take place on street from within the internal road. Refuse collection will be carried out on a weekly basis by the council and pull up adjacent to the bin collection points from where all the waste will be transported from the collection point and stores to the rear of the waste collection truck.

2.1.4 Bin stores are located on the ground floor of each block of residential apartments with easy access for all residents. They will provide separation into the relevant waste streams including general waste, recycling and food waste and provide sufficient storage capacity for all the residential units. No resident will more than a 30m distance away from their nearest respective bin storage area. On bin collection day the management company will using mechanical trolleys to bring all the bins from the stores as illustrated on **Figure 1.2** to the bin collection point and return to stores after collection.

2.1.5 Swept path analysis of a 10.5m LBH refuse vehicle has been undertaken and illustrated on Stantec drawing **46187/5501/SK013** attached as **Appendix A**. It demonstrates that the site can safely accommodate the refuse vehicle, which will enter the site in forward gear, turn using the internal junction and sit adjacent to the building where it will be loaded before exiting the site.

Figure 1.2: Residential Refuse Collection Strategy

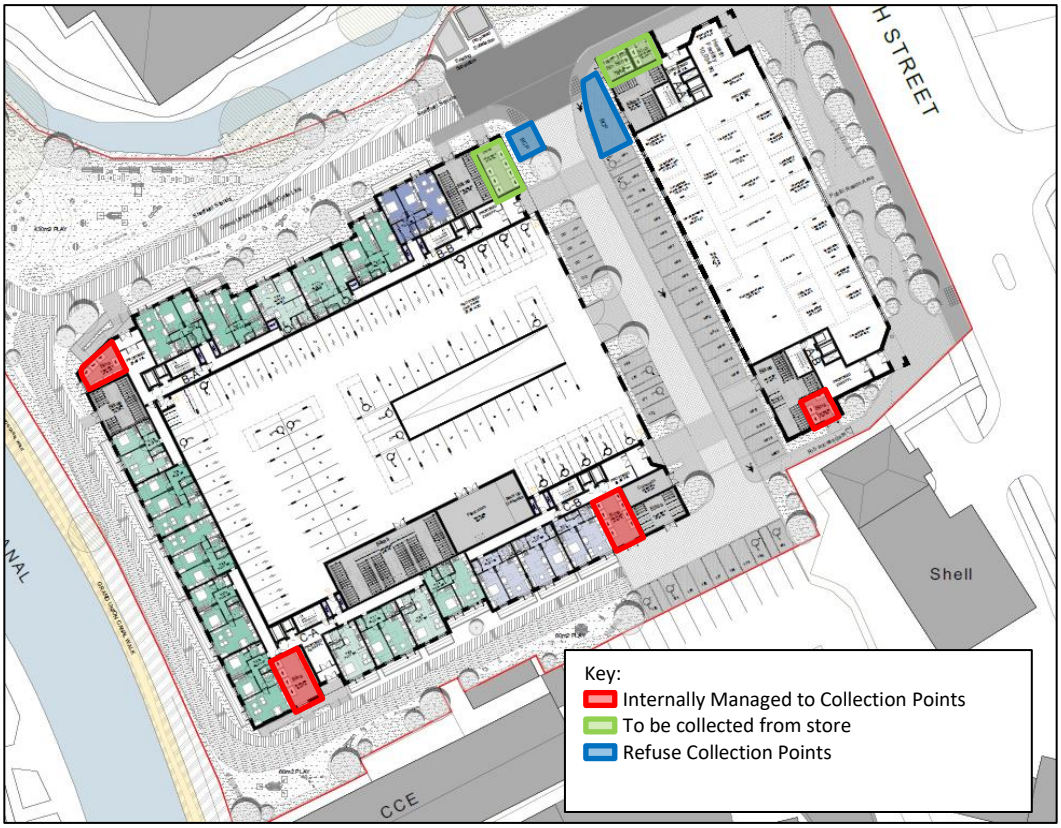

2.1.6 This refuse strategy is in accordance with the guidance on carry distance for refuse provided in Schedule 1, Part H of the building regulations (2000). There is step and kerb free access to both the internal and external bin storage areas and therefore allows the easy transfer of waste to comply with design requirements.

2.2 Health Facility Strategy

2.2.1 Deliveries and servicing for the health facility will take place from within the site. Medical supplies and prescriptions will be delivered by couriers when required by the GP surgery and pharmacy. This will be managed by the occupiers of the health facility and estate management company.

2.2.2 A dedicated storage area will be provided within the GP Surgery for clinical waste. This will be stored separate to general waste and be collected on a daily basis by private contractor to ensure safe disposal.

2.2.3 Swept path analysis of a 7.5m service vehicle and Ambulance has been undertaken and illustrated on Stantec drawing **46187/5501/SK0014** attached as **Appendix A**. It demonstrates that the site can safely accommodate servicing vehicles and Ambulance, which will enter the site in forward gear and manoeuvre using the internal junction.

3 Delivery and Servicing Trip Generation

3.1.1 The site is forecast to generate a number of servicing and delivery trips across the day.

3.1.2 The TRICS database has been interrogated and the sites that were selected as part of the TA assessment used to calculate the anticipated servicing trips. The trips rates for the LGVs and HGVs have been applied to quantum of land use on the site.

Residential Units

3.1.3 Data obtained from a TRICS database for 2 similar residential development in London has been used to estimate the delivery and servicing trip generation associated with the 235 residential units as summarised in **Table 1.1**.

Table 1.1: Residential Two-way Delivery and Servicing Trip Generation

Time Activities	LGVs	HGVs	Total
AM peak (0800-0900)	1	0	1
PM Peak (1700-1800)	5	1	6
Daily	43	4	47

Health Facility – GP Surgery

3.1.4 Data obtained from a TRICS database for 2 similar GP surgeries has been used to estimate the delivery and servicing trip generation associated with the health facility as summarised in **Table 1.2**.

Table 1.2: GP surgery Two-way Delivery and Servicing Trip Generation

Time Activities	LGVs	HGVs	Total
AM peak (0800-0900)	2	0	2
PM Peak (1700-1800)	2	0	2
Daily	38	0	38

Vehicle Types

3.1.5 It is likely that a variety of vehicle types will visit the site including:

- Motorcycles (couriers);
- Cars and vans up to 3.5 tonnes (LGVs);
- Medium / Heavy Goods Vehicles (HGVs) over 3.5 tonnes including box vans and 10m delivery lorries; and

- Large 4-axle refuse vehicle (10.15m).

3.1.6 It is envisaged that the majority of delivery and servicing trips will be made by will be made by LGVs and rigid HGVs. It is highly unlikely, given the residential nature of the development, that any deliveries would be made using an articulated HGV.

Dwell Times

3.1.7 Dwell times will vary depending on vehicle type and the type of goods being delivered or collected or the type of service being carried out.

3.1.8 Based on previous data undertaken via survey work at a number of locations across London, average dwell times have been established. These are shown in **Table 1.3** and are considered robust for the different vehicle types identified above in addition to the types of delivery the residential units are to receive. The dwell times indicate that there are not to be likely to be delays caused by delivery and servicing vehicles, particularly as there is unlikely to be large quantities of HGVs travelling to and from residential units.

Table 1.3: Vehicle Types and Dwell Times

Vehicle Type	Dwell Time
Motorcycle (couriers)	0 -10 minutes
Cars and vans up to 3.5 tonnes (LGVs)	0 – 15 minutes
HGVs over 3.5 tonnes up to 18 tonnes	5 – 30 minutes
Medium – large sized refuse vehicle	5 – 20 minutes

4 DSP Management Measures

4.1 Managing Deliveries

4.1.1 The proposed development has been designed to ensure that all servicing and delivery activities are undertaken on site to ensure that the local highway network is unaffected by the operation of the site.

4.2 Waste Management

4.2.1 The proposed development will provide sufficient segregated waste storage for general waste and recycling in accordance with the guidance set out in the London Freight Plan. It will be stored within the designated storage areas within the residential block cores.

4.2.2 Where possible refuse collection will be undertaken outside of peak hours, with the specific collection times being arranged with the local authority or private contractors to minimise impacts on the operation of the site.

Home Grocery Deliveries

4.2.3 It is thought that any residual home grocery deliveries will be timed to take place when residents are home. Locations of local retail supermarkets have been summarised in the Transport Assessment and the Travel Plan.

Click and Collect

4.2.4 Residents will be encouraged to consider services such as ‘Click and Collect’ and local collection points when ordering goods as an alternative to home delivery. By collecting as part of a link trip and reducing the need for delivery vehicles to visit the site it can reduce the number of overall trips to and from the development site.

4.3 Reducing Servicing Trips

4.3.1 The most appropriate delivery mode will be considered with suppliers and measures to encourage alternative modes recommended. For example, encourage operations such as switching off engines when making deliveries or using smaller vehicles / switching to electric / hybrid vehicles where possible will seek to ensure a safe and efficient operation.

4.4 Enforcement

4.4.1 This DSP has been prepared to inform LBH of the developer’s intent for the planning application of this site. Therefore, it must be compiled with unless otherwise agreed with LBH.

5 Review, Management and Monitoring

5.1 DSP Review

5.1.1 A programme of review will be implemented for a period of time to evaluate the success of the DSP against the objectives set out in **Section 1.**

5.1.2 Regular reviews of delivery and servicing vehicle activity will be held in conjunction with the Travel Plan. A survey will be undertaken in accordance with the TRICS Standard Assessment Methodology if required within 6 months of full occupation. Any issues identified will be raised with the TPC and dealt with accordingly.

5.2 DSP Management, Monitoring and Compliance

5.2.1 A dedicated member of the on-site management team such as the facilities manager or the concierge will be responsible for managing and monitoring of the DSP.

5.2.2 It will be this person's responsibility to ensure the DSP is functioning correctly. Meetings, reports and liaison will be carried out in accordance with any requirements that will be devised in the detailed DSP post-planning.

5.2.3 Monthly reviews of delivery and servicing vehicle activity will be held and any issues identified will be raised at meetings and dealt with via the existing process. The process will allow for any new management measures to be implemented if necessary to achieve the objectives set out within this DSP.

Appendix A Stantec Swept Path Drawings



NOTES

VEHICLE PROFILE DIMENSIONS IN LINE WITH LONDON BOROUGH OF HILLINGDON'S LARGEST REFUSE COLLECTION VEHICLE

VEHICLE PROFILE:

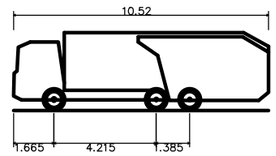

Hillingdon Borough Refuse Vehicle	
Overall Length	10.520m
Overall Width	2.530m
Overall Body Height	3.211m
Min Body Ground Clearance	0.416m
Track Width	2.530m
Lock to lock time	4.00s
Wall to Wall Turning Radius	12.000m

Mark	Revision	Date	Drawn	Chkd	Appd

SCALING NOTE: Do not scale this drawing - any errors or omissions shall be reported to Stantec without delay.

UTILITIES NOTE: The position of any existing public or private sewers, utility services, plant or apparatus shown on this drawing is believed to be correct, but no warranty to this is expressed or implied. Other such plant or apparatus may also be present but not shown. The Contractor is therefore advised to undertake their own investigation where the presence of any existing sewers, services, plant or apparatus may affect their operations.

Drawing Issue Status

FOR INFORMATION

YIEWSLEY HIGH STREET
SWEPT PATH ANALYSIS
REFUSE VEHICLE

Client

Taylor Wimpey

Date of 1st Issue	Designed	Drawn
11/06/2020	-	RC
A3 Scale	Checked	Approved
1:250	EF	

Drawing Number	Revision
46187/5501/SK013	-

Stantec

stantec.com/uk

Copyright reserved
The copyrights to all designs and drawings are the property of Stantec. Reproduction or use for any purpose other than that authorised by Stantec is forbidden.

READING
Tel: 01189 500 761

BOX VAN SERVICE VEHICLE

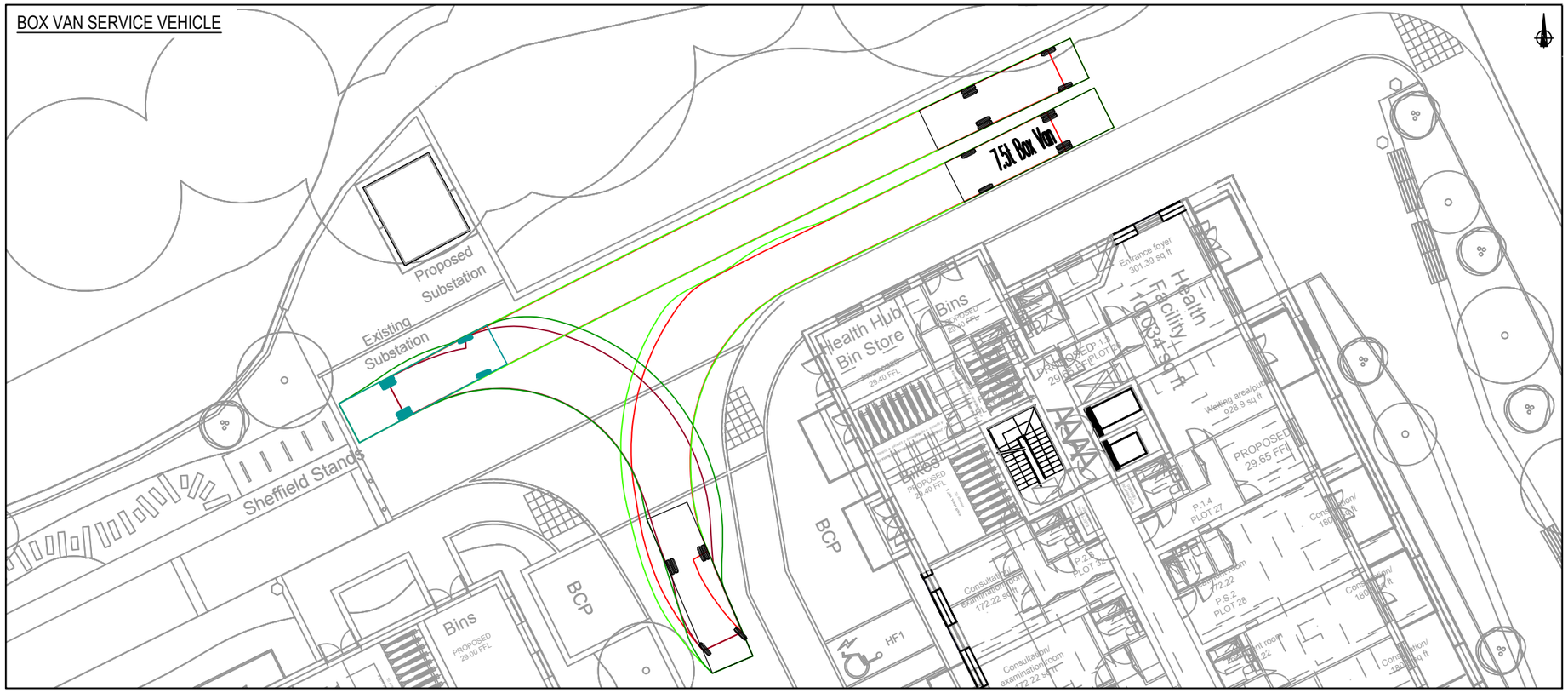

AMBULANCE

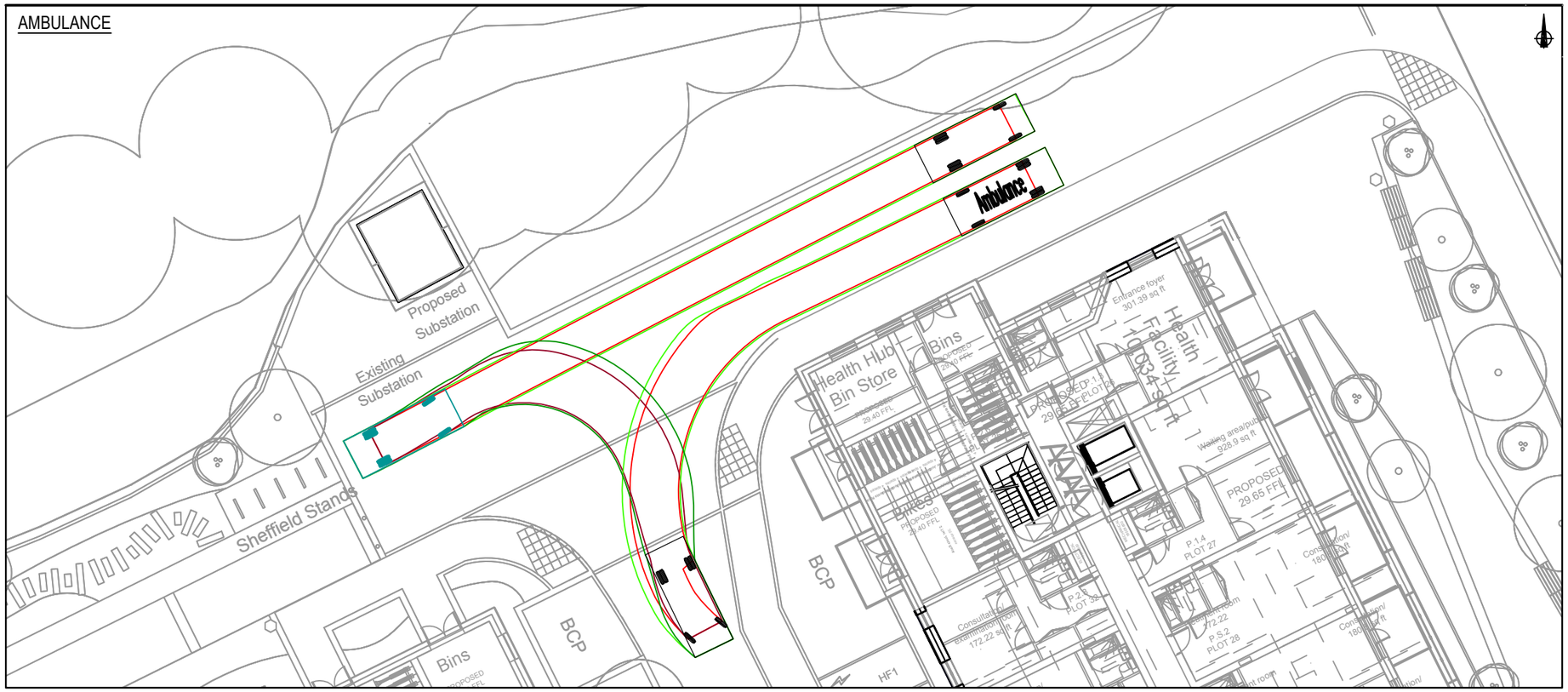

VEHICLE PROFILE:

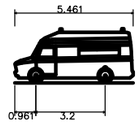

Ambulance	
Overall Length	5.461m
Overall Width	2.020m
Overall Body Height	2.498m
Min Body Ground Clearance	0.225m
Track Width	1.860m
Lock to lock time	4.00s
Kerb to Kerb Turning Radius	6.500m

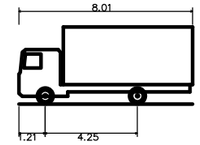

7.5t Box Van	
Overall Length	8.010m
Overall Width	2.100m
Overall Body Height	3.556m
Min Body Ground Clearance	0.351m
Track Width	2.064m
Lock to lock time	4.00s
Kerb to Kerb Turning Radius	7.400m

Mark	Revision	Date	Drawn	Chkd	Appd

SCALING NOTE: Do not scale this drawing - any errors or omissions shall be reported to Stantec without delay.

UTILITIES NOTE: The position of any existing public or private sewers, utility services, plant or apparatus shown on this drawing is believed to be correct, but no warranty to this is expressed or implied. Other such plant or apparatus may also be present but not shown. The Contractor is therefore advised to undertake their own investigation where the presence of any existing sewers, services, plant or apparatus may affect their operations.

Drawing Issue Status

FOR INFORMATION

YIEWSLEY HIGH STREET
SWEPT PATH ANALYSIS
BOX VAN SERVICE VEHICLE AND AMBULANCE

Client

Taylor Wimpey

Stantec

stantec.com/uk

Copyright reserved
The copyrights to all designs and drawings are the property of Stantec. Reproduction or use for any purpose other than that authorised by Stantec is forbidden.

READING
Tel: 01189 500 761

Date of 1st Issue	Designed	Drawn
11/06/2020	-	RC
A3 Scale	Checked	Approved
1:250	EF	

Drawing Number	Revision
46187/5501/SK014	-