C70 Gold

Tomorrow's energy efficient window and door system is here...

KÖMMERLING®

KÖMMERLING

Europe's No.1

With size comes capability. With operations across 21 different countries, KÖMMERLING is not only a leading player in the UK, but right across Europe. The company has been designing premium window and door systems for over 40 years in PVC-U and has led the way in innovation, quality and in its sensitive approach to the environment.

Parent company, profine Group, has invested heavily in new products and materials. We are one of just a handful of companies that has removed lead additives from our products, at a time when other industries have removed this harmful element from petrol, children's toys and paint. We've also developed some of the most energy efficient windows and doors available today, which are helping save our customers money every year, as energy prices continue to rise. It's also better for the environment, something that we're very passionate about.

► Your home - our pride.

We're all proud of our homes and the decision to invest in windows and doors is an important one. Beautiful looks, lasting performance, high security and energy efficiency are the key ingredients in our products.

Choose one of our Authorised Installers and they'll be able to help you make the right investment for your home. With a KÖMMERLING window or door you can also be rest assured that you'll be choosing a product that's designed by some of Europe's top engineers in the construction and home improvements markets.

Make the right investment ***for your home.***

KÖMMERLING

Better for the environment.

► Make a 'Greener' decision.

At KÖMMERLING we've been sensitive to the environment for many years and that includes our unique Greenline, lead free compound, that's inherent in all of our window and door systems. We also operate Recycline, a process of collecting any scrap PVCu materials from our customers for recycling. This includes old first generation PVCu windows that your Authorised Installers are replacing, right across the UK and Ireland.

Thermal Efficiency

▶ Modernisation increases the value of your property.

Those who invest in the renovation of their homes using modern quality windows have a number of benefits. The important reduction in heating costs due to better thermal efficiency, along with improved sound insulation is particularly important. Enhanced security and ease of use are also key variables in our technically advanced KÖMMERLING windows and doors. New windows are an investment in the long term. Windows built and installed with this state-of-the-art-technology will raise the value of your property both now and far into the future.

Ask your Authorised Installer if they can offer you a lead-free PVCu window or door? It's an important decision you need to make.

greenline

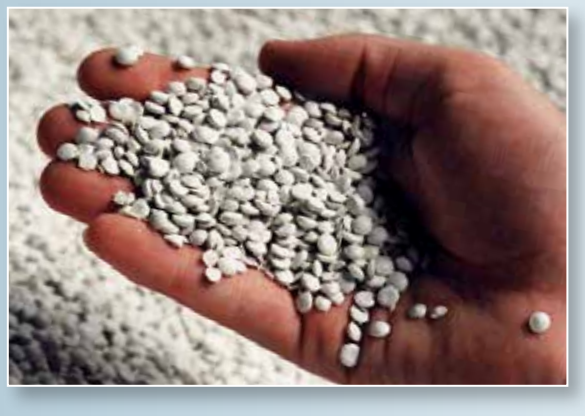

Greenline - our commitment to the use of lead free materials.

Recycline - our commitment to the recycling of waste PVCu materials.

Enhance your home

with C70 Gold.

▶ Combine a sense of style with German engineering.

A window or door is not only functional, but it can be stylish too. A subtle change in design from your existing window or door can result in more practicality, better looks and enhanced energy efficiency. Your Authorised Installer can help you with this important decision.

▶ Make it yours - make it a statement.

Thanks to our global resources, we've been able to invest in products that can be perfectly tailored to your needs in terms of design. We can also offer a huge range of colours as you'll find out later on in this brochure. Combined, this will give you the opportunity to make your investment a little more individual.

There are also subtle design features in our products, beyond the lead free materials that we use in the manufacturing process. The clean modern lines in our C70 windows and doors make for a modern and contemporary look and low line gaskets allow for slimmer sightlines and more glass.

▶ Your local installer

We've got installers right across the UK and Ireland and because our products are so well designed, it makes it easier for them to carry out an installation of the very best quality from start to finish. They have also bought into our sensitive approach to the environment.

Ask your installer about the window and door options, glass types, colour and hardware and they will be able to expertly advise you of the best available options in the market today.

Make cost savings

and be energy efficient.

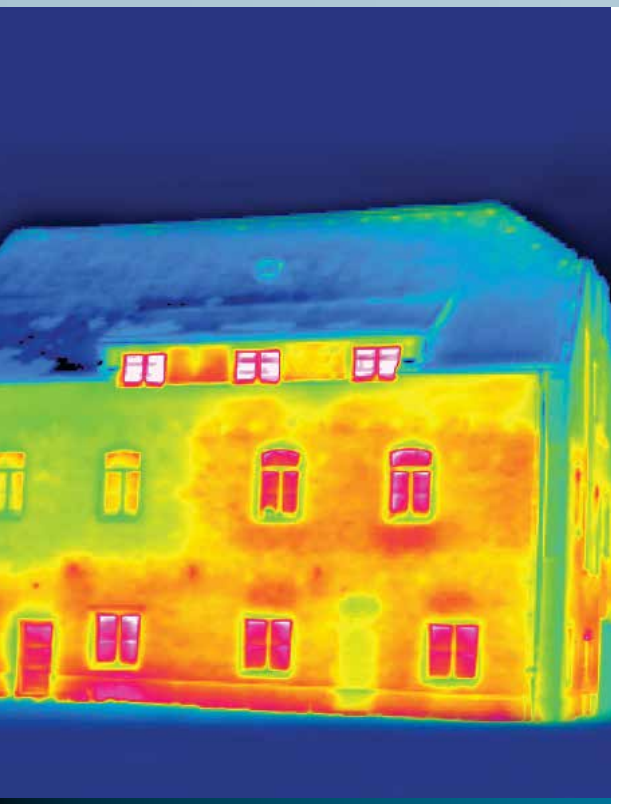

The thermal image of the house above, shows the green areas (top left) where old windows have been replaced with modern energy efficient ones, in contrast to the old existing windows shown in magenta, which let considerable heat out of the home.

Energy efficiency is one of the buzz terms for the 21st Century and quite rightly so. We'll eventually run out of natural resources and so that's why governments across the globe are looking at ways in which to cut their respective carbon footprints. We can do our bit by using less in the home and by investing in more energy efficient products.

► KÖMMERLING's five chambered design.

Our C70 Gold system has 5 chambers, unlike the dated 3 chambered designs of many of our competitors. This means that our products are more energy efficient and that's a fact. Some of our customers can also offer energy rated products like we see on white goods on the high street, while others can offer low U-values, which help keep the warmth in.

► Online energy savings and CO_2 calculator.

Log on to our website and click on our online calculator under the news section. We can show you how much money you could save each year with our products and also how many tonnes of CO2 you could save the environment. Go on, see how much you can save on your pocket and for the planet.

www.kommerling.co.uk

► Window Energy Ratings.

Look out for our windows that carry a window energy rating. Our windows readily achieve A, B and C ratings thanks to their highly energy efficient design. Alternatively they will carry a U-value and will help reduce your expensive energy bills.

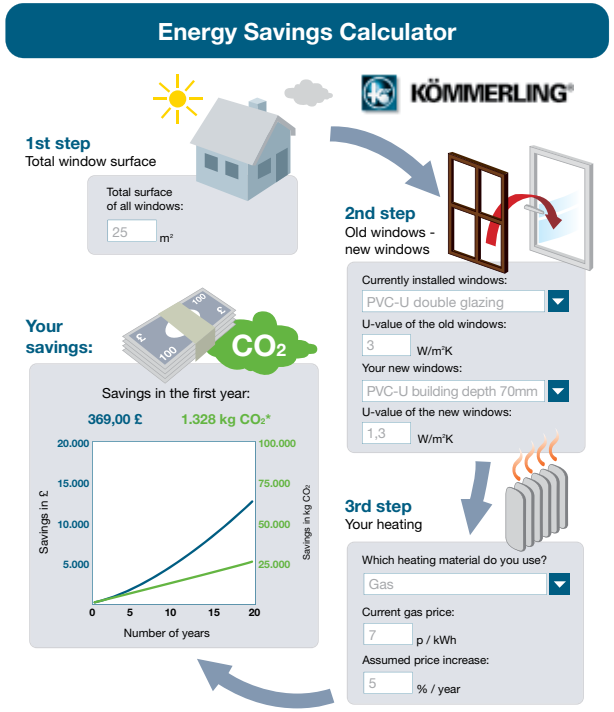

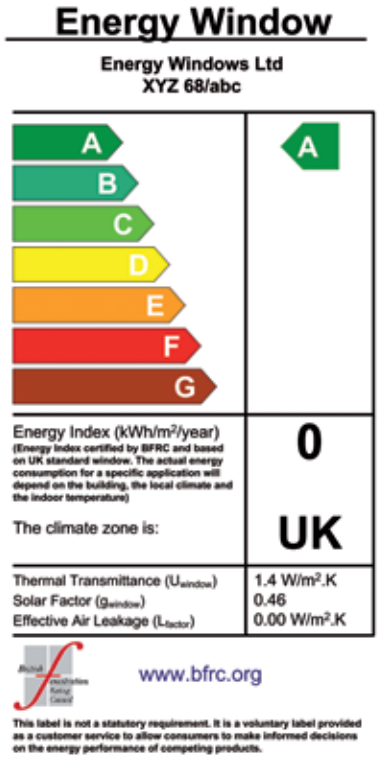

Your design - *your home.*

As consumers we have more choice than ever whether it's a coffee at Starbucks or a KÖMMERLING window or door. We can also offer you a number of colour options away from our standard white that includes warm golden oak, luxurious rosewood and traditional cream. In our range, there's a wide variety of woodgrain effect finishes and colours, for even the most individual of homes and tastes.

► An explosion of colour.

We've invested in a wide range of colours and woodgrains that can enhance your house and give it a little individual appeal. Whether you are replacing worn timber windows or tired first generation PVCu ones, you can now choose from a wide range to suit your home. We've also just launched Irish Oak, black, white ash, grey and Chartwell Green on our products. You can even have a colour on the outside and white on the inside.

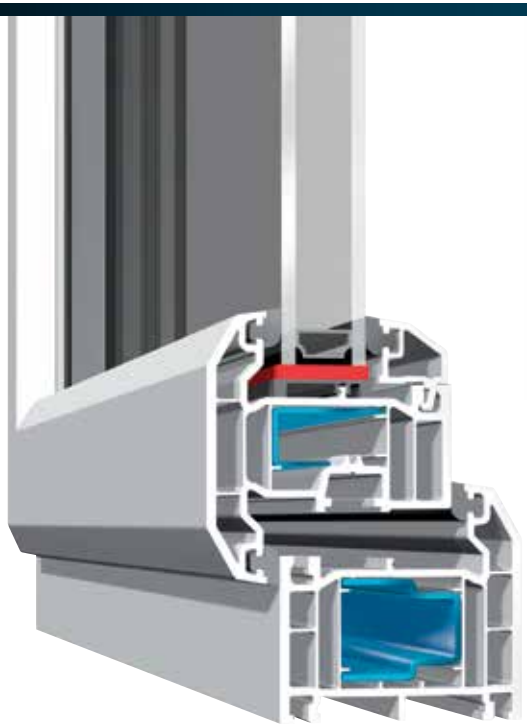

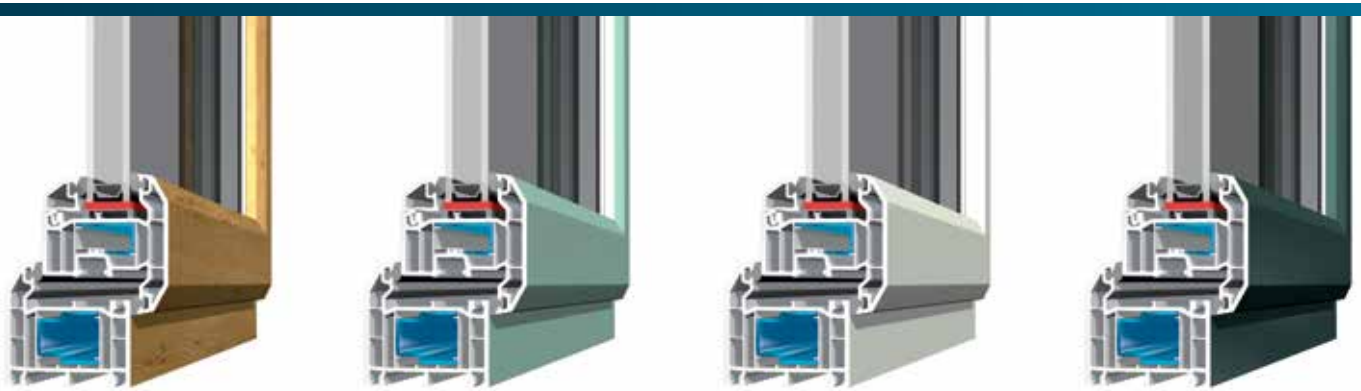

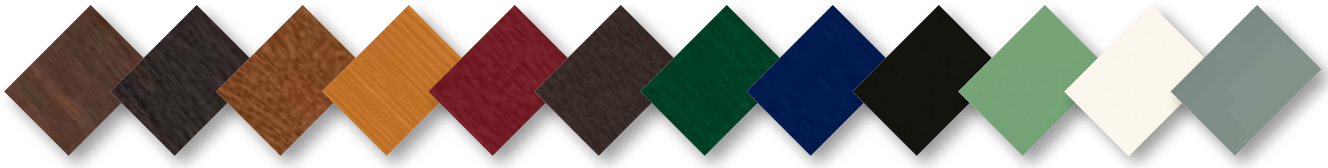

Choose from a range of over 40 colours.

Safe and secure.

Our windows and doors have been designed to offer the highest levels of security for your home. With over 1 million burglaries or attempted burglaries each year in the UK, it's important to make your home secure and we're here to help.

Our installers can offer you windows and doors that have multi-point locking systems and even lockable handles. In particular our C70 Gold system offers both high secure internal and external beading, the key product that holds the double glazed unit in place safely and securely. There are also several other key security features that we can offer, ask your local installer for furtherdetails.

▶ Low maintenance.

Our PVCu windows and doors have been designed to be near maintenance free. Just a little light oil on the moving parts once every few years should see your investment last well over 20 years. We've been testing our products in some of the world's harshest climates including deserts and extreme alpine locations over long periods of time with great success.

Be re-assured that with any KÖMMERLING window or door, you're making your home more secure.

Almost maintenance free

▶ KÖMMERLING C70 Gold Product features.

Not all PVCu window and door systems are the same and we've spent the last 40 years building an enviable reputation for innovation, quality and product design. Much like the German car industry is respected for its product development programme, we too have made the same impact in the construction and home improvement sectors.

The cross section of our C70 Gold system shown highlights a number of key features:

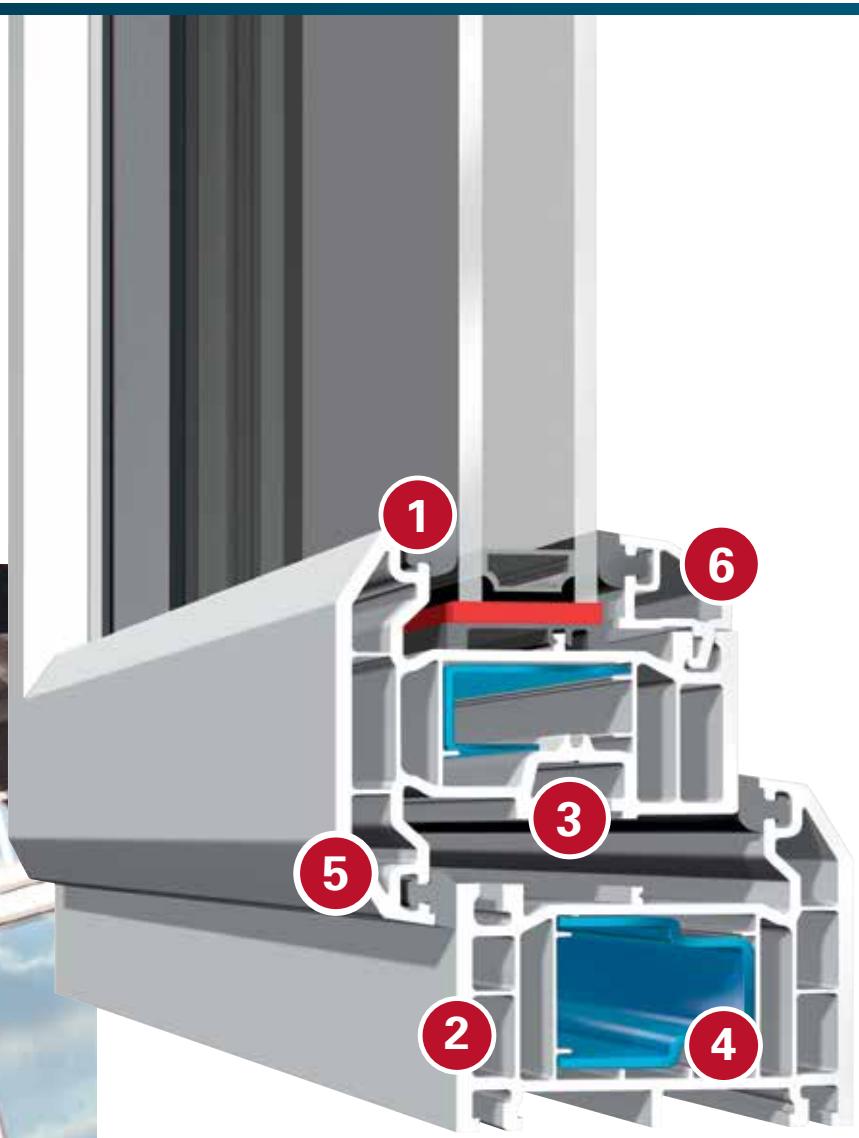

1. Low line gaskets and weatherseals provide lasting performance and slimmer sightlines.

2. Five chambered system is more energy efficient than the 3 chambered designs from many of our competitors.

3. The full depth, central eurogroove helps make the windows and doors more secure.

4. Steel reinforcement is used where needed, to add additional structural strength.

5. The chamfered design of C70 Gold gives a modern and clean look through the frame, sash and glazing bead.

6. Single leg glazing bead is highly secure and easy to install on site.

Tried, tested and trusted...

- We're Europe's No 1, which means we have the resources to develop the very best products and materials in the market.
- We only use lead free materials – better for you, better for the environment.
- The five chambered C70 Gold system is highly energy efficient.
- Our range of woodgrains and colours offers you something unique.
- We've tested our products in the harshest climates of the world.
- We have a nationwide network of installation companies experienced in the design and installation of our products.

profine UK Ltd
Lancaster Rd
Fradley Park
Fradley
Lichfield
Staffordshire
WS13 8RY

Tel.: +44 (0) 1543 444 900
Fax: +44 (0) 1543 444 990
eMail: enquiries@profine-group.com
Website: http://www.kommerling.co.uk

...C70 Gold. The standard for the future.