THIS DRAWING IS THE EXCLUSIVE PROPERTY OF PERFECT SENSE ENERGY
IT IS LOANED TO THE RECIPIENT SUBJECT TO RETURN UNCOPIED. ON DEMAND. IT'S CONTENTS MAY NOT BE ALTERED. REPRODUCED. ISSUED TO THIRD PARTIES OR USED OTHER THAN FOR THE CONTRACT WORK FOR WHICH IT IS ISSUED WITHOUT WRITTEN PERMISSION OF PERFECT SENSE ENERGY

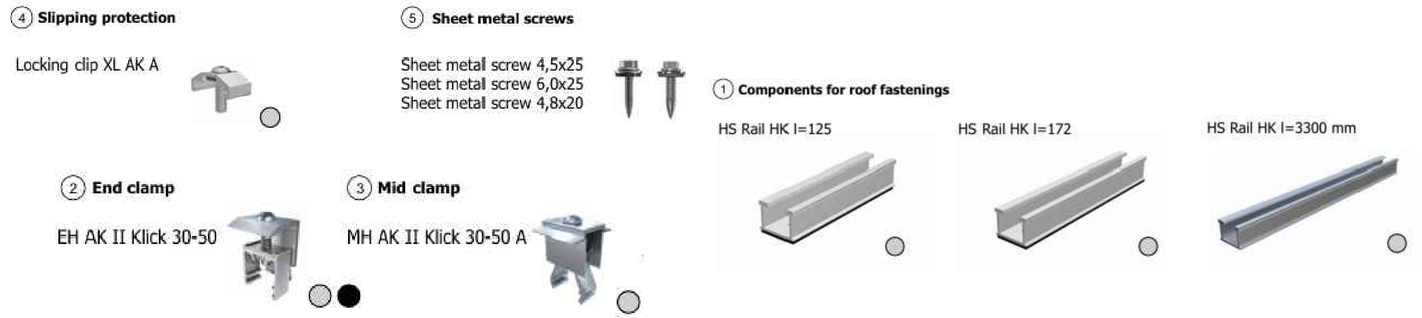

PROPOSED SOLAR PV ARRAY TYPICAL END CLAMP DETAIL

SCALE NTS@A1

PROPOSED SOLAR PV ARRAY SYSTEM COMPONENTS

SCALE NTS@A1

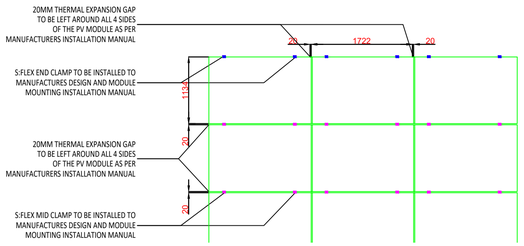

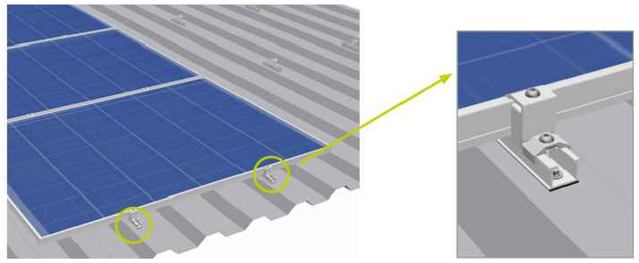

TYPICAL SOLAR PV INSTALLATION LAYOUT

SCALE 1:50@A1

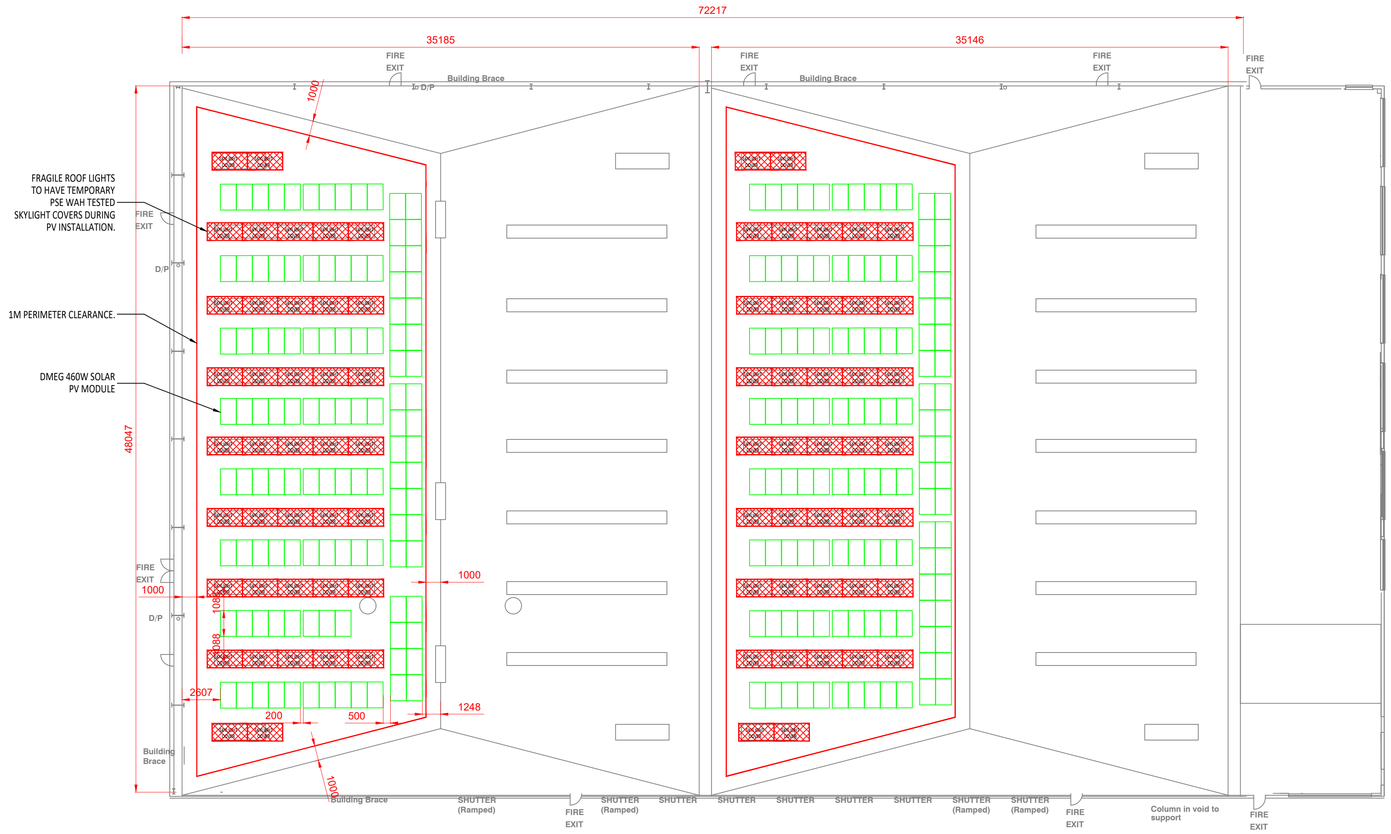

232 X DMEGC - DM460G12RT-48HBT SOLAR MODULES = 106.72KWP

SCALE 1:200@A1

ENGINEER MUST REFER TO SINGLE LINE DIAGRAM FOR DETAILED INSTALLATION OF ELECTRICAL COMPONENTS & CABLE REFERENCES

THIS DRAWING MUST NOT BE USED AS AN INSTALLATION DOCUMENT. ALL MANUFACURERS DESIGNS AND INSTALLATION MANUALS MUST BE READ AND FOLLOWED.

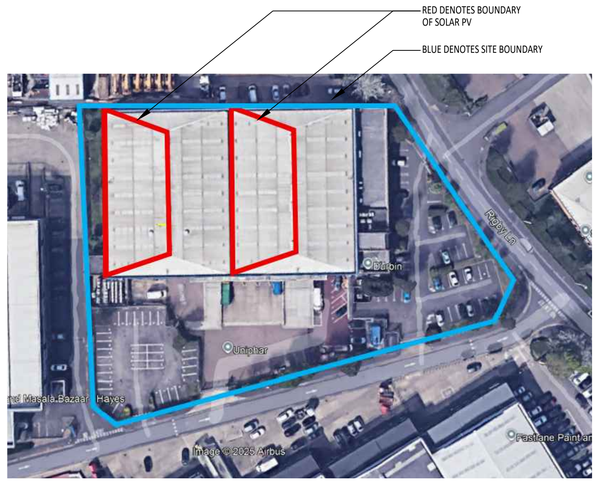

PROPOSED BOUNDARY

SCALE - NTS@A1

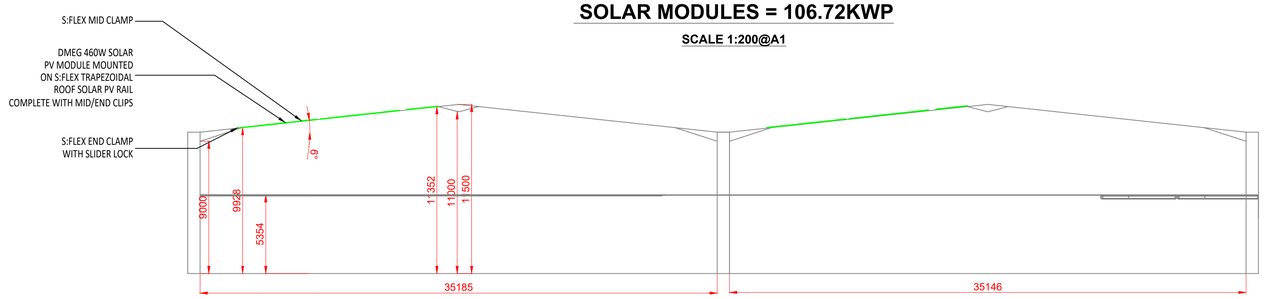

PROPOSED SIDE ELEVATION

SCALE 1:200@A1

FOR INFORMATION

Rev	Description	By	Chk	Appr	Date
A	ISSUED FOR INFORMATION	AFN	CC	GB	MAR 2026

Client: UNIT 5 SWALLOWFIELD WAY

Project: SWALLOWFIELD WAY
HAYES
UB3 1DQ

Title: PROPOSED 106.72KWP SOLAR PV LAYOUT

perfect sense energy

17 HOPE CARR ROAD,
LEIGH,
WIGAN, WN7 3ET
t . +44 (0) 1942 367 599
www.perfectsenseenergy.com
e. energysavings@perfectsenseenergy.com

Drawn By	Checked By	Approved By	Date
AFN	CC	GB	MAR 2026
Scale: AS NOTED	Drawing Number: PSE-ELI-001		Revision: A