SJ Stephens Associates

ARBORICULTURAL, LANDSCAPE & MANAGEMENT CONSULTANTS

Savernake Barn
Stokke Common
Great Bedwyn
Marlborough
Wiltshire SN8 3LL
Tel: 01672 871 862
www.sjstephens.co.uk
e: info@sjstephens.co.uk

Arboricultural Impact Assessment

- Tree Survey
- Tree Protection Plan
- Preliminary Arboricultural Method Statement

At:-

Phase 4 Enabling Works
Hillingdon Hospital
Pield Heath Road
Uxbridge
UB8 3NN

On behalf of:-

Hillingdon Hospitals NHS Trust
c/o Nexus Planning
5th Floor Thames Tower
Station Road
Reading
RG1 1LX

Prepared by:

Simon Stephens MA Oxon, Dip Arb(RFS), MArborA, C Env. MICFor
Email: simon@sjstephens.co.uk

Survey Date: 7th November 2018
Report Date: 16th April 2019
Project no: 654

CONTENTS

1 BACKGROUND
2 SURVEY DETAILS AND SCOPE
3 SURVEY LIMITATIONS
4 LEGAL PROTECTION OF TREES
5 ARBORICULTURAL METHOD STATEMENT
6 ARBORICULTURAL IMPACT ASSESSMENT

Appendices
A Tree Protection Plan: drawing no: 654-03revB
B Tree Schedule
C BS 5837:2012 - Trees in relation to design, demolition and construction, Table 1
D Tree Protection Fencing Detail
E Proposed Site Plan

1 BACKGROUND

1.1 This Arboricultural Impact Assessment relates to the proposed construction of a new ambulance access point as part of Phase 4 enabling works at Hillingdon Hospital, and provides recommendations for the management of trees on the site. It has been instructed by Nexus Planning, on behalf of the Hillingdon Hospitals NHS Trust.

1.2 The tree survey was undertaken, and this report has been prepared, by Simon Stephens MA Oxon, Dip Arb (RFS), MArborA, C Env, MICFor a Registered Consultant with the Arboricultural Association, with over 20 years relevant experience.

1.3 This survey and report have been prepared in accordance with recommendations provided in BS 5837:2012, Trees in relation to design, demolition and construction - Recommendations.

1.4 Documentation supplied:

- Topographical Survey
- SJ Stephens Associates, Tree Constraints Plan, drawing no 654-02
- Oxford Architects, Proposed Site Plan: drawing no 051-P9-SO

2 SURVEY DETAILS AND SCOPE

2.1 The site survey included trees and shrubs, within influencing distance of the proposed development, with a stem diameter over 75mm at 1.5m height, located within the area shown on the Tree Protection Plan, included as Appendix A.

2.2 Tree inspection took place from ground level with the use of binoculars, sounding hammer and metal probe using the Visual Tree Assessment method (Mattheck & Breloer 1994). The presence and condition of bark and stem wounds, cavities, decay, fungal fruiting bodies and any structural defects that could increase the risk of structural failure were noted.

2.3 Tree details have been added to the plan received, which is included as Appendix A. Tree locations have been taken from the topographical survey provided. Where not included on the topographical survey, they have been determined by measuring distances from features shown on the plan, using a laser measuring device. The following information was recorded for each tree, and is shown in the Tree Schedule included as Appendix B:

- **Number:** an identity number for each tree, prefixed with a "T", which cross references locations shown on the plan with the schedule in Appendix B. Where a number of trees, normally of the same species, are located close together and are similar in character and requirements, they have been treated as a Group under a single Number, prefixed with a "G".
- **Species**: common name.
- **Tree height**: approximate height in metres.
- **Stem diameter**: diameter in millimetres, taken at 1.5m above ground. Where there are a number of stems, stem diameters are recorded in the condition column.
- **Branch spread**: approximate spread in metres to N,S,E and W of the trunk. The approximate branch spread is drawn on the plan.
- **Canopy clearance**: approximate height of the canopy above ground. Where a significant, low lateral branch is present, its height and direction of growth is included in the Condition column.
- **Age class**: Young, Semi-mature, Early mature, Mature, Over-mature, Veteran.
- **Condition**: features that affect the safe useful life expectancy and amenity of the tree, including the presence of decay or any physical defect.
- **Management Recommendations**: recommendations to ensure the health and safety of the tree, within the future development.
- **Estimated Remaining Contribution**: <10 years, 5-15 years, 10-20 years, 15-30 years, 20-40 years, >40 years.
- **Category grading**: tree classification taken from BS 5837:2012, Trees in relation to design, demolition and construction (see Appendix C for details), as follows:
    - Category U: Unsuitable for retention, trees with less than 10 years life expectancy, normally recommended for removal (Red)
    - Category A: high quality trees, able to make a substantial contribution for at least 40 years, normally retained unless there is an over-riding reason for removal and appropriate mitigation. (Green)

- Category B: moderate quality trees, able to make a significant contribution for at least 20 years, normally retained. (Blue)
- Category B/C: an intermediate category between categories B and C (not specifically described in BS5837). Trees, which should be retained wherever possible, providing retention does not unreasonably constrain the layout. (Blue)
- Category C: low quality, in adequate condition to remain for at least 10 years, or young trees <150mm stem diameter. Trees which can be removed to allow the desired layout or new planting. (Grey)

For category A, B and C trees, a subcategory has been allocated, providing information on the reasons for selection of a specific category, as follows:

- Subcategory 1: mainly arboricultural values.
- Subcategory 2: mainly landscape values.
- Subcategory 3: mainly cultural values, including conservation.

- Trees have been classified irrespective of the possible proximity to future construction. The BS 5837 category is colour coded, as indicated above, on the plan included as Appendix A.
- **Protection Distance:** the protection distance in metres required to provide the Root Protection Area recommended in BS 5837, assuming a circular area centred on the tree.
- **Root Protection Area (RPA):** the area in m^2, as recommended in BS 5837, to provide sufficient rooting area to ensure tree survival and which, in most situations, should be fenced off to prevent root damage from construction activities.

3 SURVEY LIMITATIONS

3.1 No internal decay devices, or other invasive tools to assess tree condition, were used.

3.2 No soil excavation or root inspection was carried out.

3.3 This survey has not considered the effect that trees or vegetation may have on the structural integrity of future building through subsidence or heave.

3.4 The tree survey has been undertaken for planning purposes. Although any obvious structural defects have been noted, a Tree Hazard Assessment has not been carried out. Mature trees close to highly populated areas or public highways should normally be checked for safety annually, by a suitably qualified person.

4 LEGAL PROTECTION OF TREES

4.1.1 There are understood to be no Tree Preservation Orders affecting the site, nor does it fall within a Conservation Area. The presence of Planning Conditions currently attached to the site, was not checked.

5 ARBORICULTURAL METHOD STATEMENT

5.1 Site Overview

5.1.1 The proposal is for the construction of a new ambulance access point which is essential to realise plans for reorganizing the layout of this part of the hospital. The proposed site plan is included as Appendix E and is also shown, along with tree details, on the Tree Protection Plan attached as Appendix A.

5.1.2 There are four mature oak trees (T1, T2, T3 and T4) which are providing high visual amenity and must be protected in any proposals. These trees ae showing reasonable vigour, despite heavy compaction of the soil around them. The semi mature oak (T12), should be retained if possible, but is of less importance as – at only 7m in height – could be replaced if essential.

5.1.3 There is a line of six purple plum (*Prunus cerasifera Pissardii*) growing alongside the entrance, five of which will need to be removed.

5.1.4 Other trees and shrubs are of less significance.

5.2 Tree Work

5.2.1 Details of proposed tree works are included in the Tree Schedule included as Appendix B.

5.2.2 11 trees and a group of shubs are proposed for removal, as detailed in section 6.1 below.

5.2.3 In addition, crown lifting of the purple plum (T22) is proposed.

5.2.4 All tree work must be undertaken to the standards set out in BS 3998:2010 Tree work – Recommendations.

5.3 Root Protection Areas

5.3.1 Root Protection Areas are shown for all trees in the tree schedule attached as Appendix B. They are also shown for all retained trees, as circular areas centred on the trunk, on the Tree Protection Plan attached as Appendix A. This shows the distance that construction must normally be kept back from a tree, to provide the Root Protection Area recommended in BS 5837.

5.4 Tree Protection Fencing

5.4.1 Tree Protection Fencing must be erected where shown on the Tree Protection Plan, attached as Appendix A. This will provides full protection of the Root Protection Areas of all retained trees, other than for:

- areas hatched in blue on the Tree Protection Plan, where No-Dig Construction must be used, as described in section 5.5 below, to protect underlying roots.

- areas shaded cyan on the Tree Protection Plan, indicating Ground Protection Areas, where roots must be protected, as described in section 5.6 below.

- areas covered by existing hard surfacing, outside the site which will not be affected.

5.4.2 Tree works can be completed before Tree Protection Fencing is erected, however no contractors plant or vehicles must be allowed to track within the Root Protection Areas unless ground protection panels are laid.

5.4.3 Tree Protection Fencing must be from weldmesh panels, at least 2m high, securely fixed, with wire or scaffold clamps, to a rigid framework. This framework must be constructed from scaffold tubes with vertical tubes, at a maximum interval of 3m and driven into the ground at least 0.6m. The structure must be well braced to resist impacts, constructed as per Figure 2 of BS5837:2012, which is reproduced in Appendix D.

5.4.4 After erection of Tree Protection Fencing and installation of ground protection, 2 days notice must be given to the Local Planning Authority before construction, including any ground work, starts on site. Tree Protection Fencing must be maintained and retained for the duration of the works, or until such time as agreed in writing with the Local Planning Authority.

5.4.5 Notices must be fixed to the Tree Protection Fencing stating:- “Tree Protection Fencing – No construction activity to take place within this area”.

5.5 No-Dig Construction Areas

5.5.1 The No-Dig Construction areas, shown hatched blue on the Tree Protection Plan, must be constructed without excavation apart from the removal of turf/organic matter, which must be carried out by hand. Excavators, dumpers and site traffic must not be allowed to track on the No-Dig areas until roots are protected by the No-Dig surfacing or ground protection.

5.5.2 Engineering details must avoid localised compaction, using both a two dimensional geogrid, and a three dimensional cellular confinement system as integral components of the sub-base. A typical section is shown on the Tree Protection Plan included as Appendix A. As well as being fit for purpose, the design and methodology must protect tree roots, by ensuring the following:-

- topsoil/turf can be removed carefully by hand to a maximum of 75mm, but less if roots are found nearer the surface.
- following leveling with soil or sand, a permeable, non-woven geotextile membrane, must be laid.
- a suitable two dimensional geogrid, such the TriAx Geogrid supplied by Tensar International (www.tensar.co.uk), or the Biaxial Geogrid supplied by Geosynthetics Ltd (www.geosyn.co.uk), must be laid over the entire area and underneath the edging.
- Kerb stones must be laid on top of the geotextile and geogrid. If required steel reinforcing rods can be driven to provide additional anchorage for kerb stones.
- a suitable cellular confinement system must then be laid to manufacturers instructions on top of the geogrid. Products that might be considered include Geoweb, supplied by Greenfix (www.greenfix.co.uk) or Cellweb, supplied by Geosynthetics Ltd (www.geosyn.co.uk). The depth of the system must be adequate to take the maximum axle weight, as per manufacturers guidance.
- the cellular confinement system must be filled with clean (no fines), washed angular, 4/20mm, stone to provide load support, while allowing air and moisture to permeate to the root zone.
- a further permeable, non-woven geotextile membrane, such as TreetexT300, or an alternative approved product which has similar oil trapping qualities, must be laid over the cellular confinement system.
- a porous, surfacing material, free from contaminants, must then be laid. Either sand bedding and block paving, gravel or permeable tarmac would be suitable.
- removed turf/topsoil can be used to grade surrounding ground levels.

5.5.3 Site traffic, including pedestrians, must not be allowed on the No-Dig areas until roots are protected by the No-Dig surfacing, or unless suitable ground protection has been laid. If access is required across No-Dig areas for plant, before the No-Dig surfacing is laid, ground protection panels must be laid. Either Trakmats (supplied by the Marwood Group, www.marwoodgroup.co.uk), Groundtrax panels (see www.groundtrax.com), Ground-Guards, as supplied by Greentek (www.greentek.org.uk), or a similar approved product, must be used, laid on top of a compressible layer of sand or woodchips, laid onto a geotextile. If access is required for pedestrians, 25mm plywood or side butting scaffold boards must be laid, on top of a compressible layer of sand or woodchips, laid onto a geotextile.

5.5.4 No-Dig construction will result in an increase in levels. This must be fully taken account of in all other aspects of the design.

5.6 Ground Protection Areas

5.6.1 The Ground Protection Areas, which are shaded cyan on the Tree Protection Plan, contain hard surfacing which is protecting any underlying roots. No excavation must be permitted beneath the base course within these areas.

5.6.2 Where the existing path runs adjacent to T22, it will be lifted and replaced with soft landscaping. An excavator must only be used for the removal of the existing hard surfacing within the Root Protection Area of T22, if it can work only from areas of hardstanding, or from outside the Root Protection Area. A banksman must be present during this operation and excavation must go no deeper than the existing base course and must cease immediately if roots are found. Once hard surfacing has been removed, the area must immediately be topsoiled using good quality topsoil supplied to BS3882:2015.

5.7 Hand Dig Areas

5.7.1 The Hand Dig area adjacent to T22, shown cross-hatched red on the Tree Protection Plan, must be dug to formation level by hand, neatly severing any roots found, using secateurs or a hand saw.

5.7.2 Where new barriers are to be erected in the Root Protection Areas of T12 and T22 , post holes must be dug by hand, neatly severing any roots found using secateurs or a hand saw. The post holes must then be lined with heavy-duty polythene, before concrete is poured, to avoid the toxic affects of cement on tree roots.

5.7.3 On no account must use of an excavator be used in the Hand Dig areas, which would rip roots and cause unnecessary damage.

5.8 General measures

5.8.1 No construction activity whatsoever, including routing of underground services, storage of materials or on-site parking, must be allowed within Root Protection Areas, other than that specifically described above.

5.8.2 No mixing of cement, or concrete, or storage of fuel must take place within 10m of retained trees, nor in any position where the slope of the ground could lead to contamination of the Root Protection Area.

5.8.3 Fires must not be lit in a position where their flames could extend to within 10m of foliage, branches or trunk.

5.8.4 Landscape works carried out within Root Protection Areas must be undertaken with great care so as not to damage shallow roots. Tractor mounted rotovators or other heavy mechanical cultivation must not be used within the Root Protection Areas.

5.8.5 A copy of the Tree Protection Plan must be kept on site and must be fully understood by the Site Agent.

5.9 Bat roosts

5.9.1 The current legislation makes it a criminal offence to disturb, damage or destroy any bat roost or hibernation area. Contractors must be reminded of their responsibilities and should contact the relevant authorities if any signs of bats are found.

5.10 Birds

5.10.1 The current legislation makes it a criminal offence to disturb nesting birds. The nesting season is generally assumed to be from 1st March to 31st July, however this can vary depending on species and location. During these months a careful inspection must be made before work commences and works must be postponed if active nests are found.

5.11 Structure planting

5.11.1 Two new oak trees must be planted, located on the eastern side of the hospital entrance road, with precise locations to be agreed.

5.11.2 These trees must be 14-16cm girth container grown trees, supplied in a 75 litre container. Trees must be double staked and planted in 900mm by 900mm tree pits, with the pit depth being the same as the root ball, but with the pit base broken up. 160litres of tree planting compost must be incorporated in each pit. Planting must be carried out during the first planting season (December to March) after the start of construction. Should any tree die within 5 years of planting it must be replaced during the next planting season.

5.11.3 The quality of all nursery stock, standards of workmanship and maintenance must comply with the relevant sections of British Standard BS 8545:2014 Trees: from nursery to independence in the landscape – Recommendations.

5.12 Arboricultural Supervision

5.12.1 A qualified Arboricultural Consultant must be retained during the period of construction to carry out the following:

- to meet with/ liaise with the contractor, prior to construction starting on site, to ensure this Arboricultural Method Statement is fully understood and can be complied with in full. If any revisions are required, a revised Arboricultural Method Statement must be approved by the Local Planning Authority, prior to construction or demolition starting on site.

- to inspect Tree Protection Fencing and ground protection, prior to construction or ground work starting on site.

- to visit site as construction of the No-Dig areas starts

- as necessary, to advise on any issues at the request of the local planning authority, the hospital, architect or contractor.

The details of each site visit must be recorded using a site visit proforma, with copies circulated to the contractor, developer and the local authority Tree Officer within 3 working days of the visit.

6 ARBORICULTURAL IMPACT ASSESSMENT

6.1 The following trees / tree groups, categorized as per BS 5837 (see Appendix C for details), are proposed for removal:

- Category U – unsuitable for retention: T13
- Category C – low quality: four trees – T8, T10, T15 and T21 and one shrub group, G16.
- Category B/C – between categories B and C: four trees
  - T17 – T20 –four Purple plum, all approximately 5.5m in height
- Category B – moderate quality: two trees
  - T9 – a 10m twin stem oak, with a concrete post embedded in the stem
  - T11 – a 7.5m oak, with an asymmetric crown

6.2 The five purple plum (Prunus cerasifera Pissardii) that will be removed are small growing trees, providing good amenity value at present. However, this is a short lived species and these trees are estimated to have a life expectancy of only 10-20 years. Having considered various layouts, removal of these trees is considered far preferable to any alternative layout which might threaten the mature oak closer to the main road.

6.3 One purple plum, T22, will be retained but will need to be crown lifted. There will also be some excavation within the Root Protection Area for the new hard surfacing. It is therefore possible that this tree will fail, however it is considered preferable to try to retain it.

6.4 Protection measures have been specified to protect the Root Protection Areas of all other retained trees.

6.5 Provided the recommendations in this report are followed, the arboricultural impact of this development on existing trees is considered acceptable. Arboricultural supervision has been included to assist with tree protection measures.

APPENDIX A

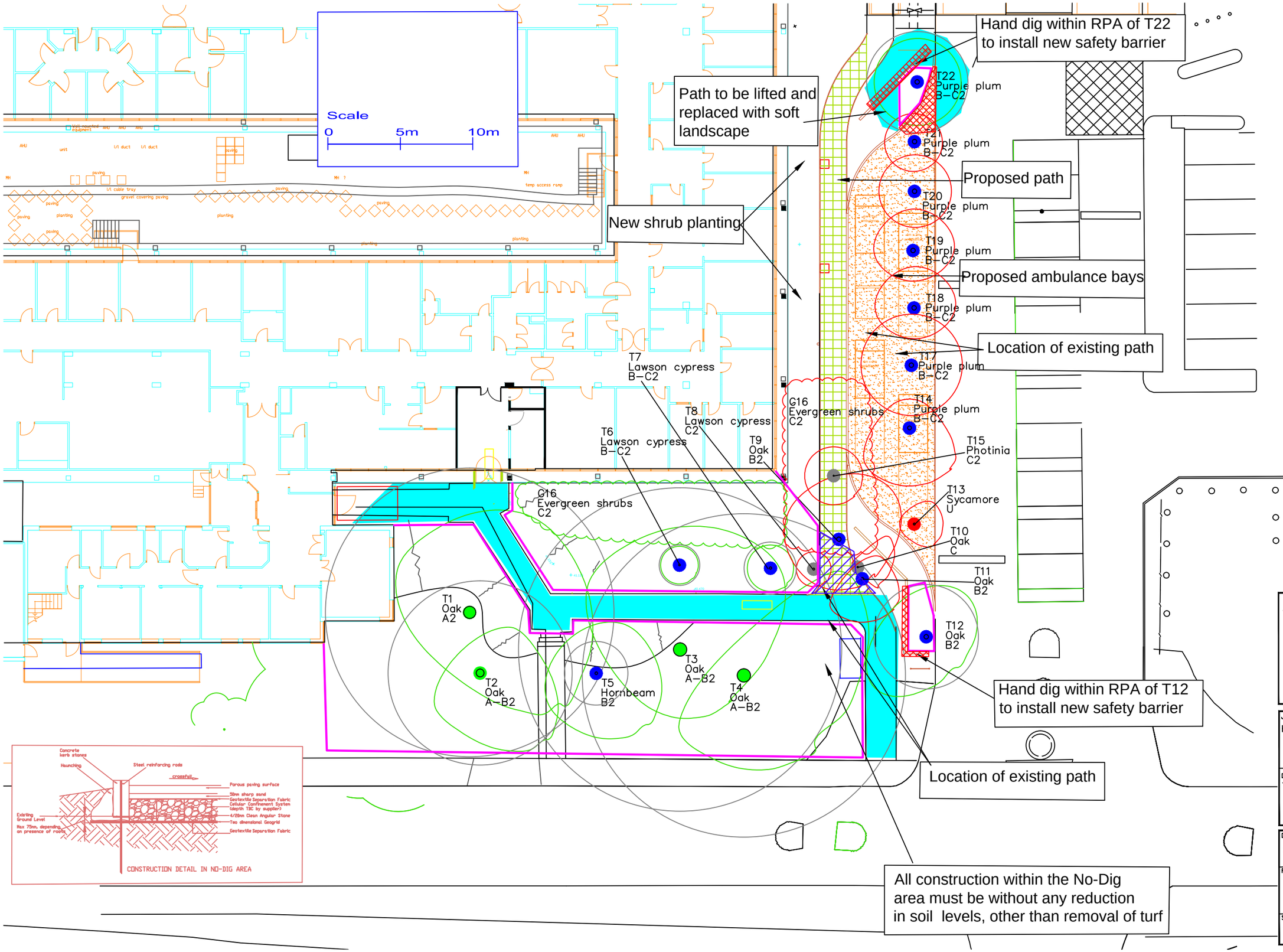

Key

- Category U
- Category A
- Category B
- Category C
- Crown spread: retained trees
- Trees For Removal
- Root Protection Area
- Tree Protection Fencing
- No-Dig Construction
- Hand Dig Area
- Ground Protection Area

SJ Stephens Associates
Savernake Barn, Stokke Common
Great Bedwyn
Marlborough
Wiltshire SN8 3LL
01672 871862
www.sjstephens.co.uk

JOB TITLE	HILLINGDON HOSPITAL
DRAWING TITLE	TREE PROTECTION PLAN
DRAWING NUMBER	654–03
REV	B
REVISIONS	
SCALE	1:250 at A3
DATE	APR 19
DRAWN BY	sjss

Tree/ Group No.	Species	Height (m)	Stem Diam. at 1.5m (mm)	Branch Spread (m)				Canopy Cleara -nce (m)	Age Class	Observations	Management Recommendations	Estimated Remaining Contribution (years)	BS 5837 Category Grading	Protect -ion Distnce (m)	Root Protect. Area (m2)
				N	S	E	W								
T1	Oak	17.5	830	9	6	4	8	2.5	Mature	Main stem bifurcates at 4m. Reduced in the past. Canopy over sails building by approximately 2m. Showing good vigour.		>40	A2	10.0	311
T2	Oak	14.5	530	6.5	2	4	4	2.5	Early mature	Growing through the canopy of T1. Asymmetric canopy. Low branches recently removed. Showing good vigour.		>40	A-B2	6.4	127
T3	Oak	22.5	930	5	8	4.5	9	4.0	Mature	Showing good vigour. Recent pruning undertaken. Basal bark wound to south, but no sigh of extensive underlying decay. Fungal brackets at base at two locations to north and to north east- possibly *Ganoderma resinosum*.	Internal decay detection as a baseline to monitor possible future heartwood decay.	>40	A-B2	11.2	391
T4	Oak	18	930	7	2	6	10	4.5	Mature	Dieback at branch extremities, with deadwood up to 100mm diameter longitudinal bark wound (1.5m) to low lateral limb to west from 2.5m.	Remove major deadwood.	20-40	A-B2	11.2	391
T5	Hornbeam	6.5	180	5	3	4	4	1.8	Semi-mature	Showing reasonable vigour, despite group compaction around base.		>40	B2	2.2	15
T6	Lawson cypress	5.5	120	1.3	1.3	1.3	1.3	1.7	Semi-mature	Main stem bifurcates at 0.9m- 70,100mm. Growing under canopy of T3, but showing good vigour.		15-30	B-C2	1.4	7
T7	Lawson cypress	7	150	1.6	1.6	1.6	1.6	1.7	Semi-mature	Growing under canopy of T4. Foliage beginning to thin.		10-20	B-C2	1.8	10
T8	Lawson cypress	7	140	1.2	1.2	1.2	1.2	1.6	Semi-mature	Foliage beginning to thin.	Remove to facilitate new layout	10-20	C2	1.7	9
T9	Oak	10	300	3.5	4	3.5	5	2	Semi-mature	Twin stem from base- 130,270mm. Growing through chain link fence, with concrete post embedded at base of stem. Showing good vigour.	Remove to facilitate new layout	20-40	B2	3.6	41
T10	Oak	6.5	90	2	0.5	0	3	1.8	Semi-mature	Low quality- drawn up. Deadwood.	Remove to facilitate new layout	5-10	C	1.1	4
T11	Oak	7.5	170	3	1	3	2	1.9	Semi-mature	Asymmetric crown. Reasonable vigour. Soil compaction around base.	Remove to facilitate new layout	>40	B2	2.0	13
T12	Oak	7	300	3	3	5	4	1.9	Semi-mature	Minor deadwood thoughout canopy, but showing reasonable vigour. Soil compaction at base.		>40	B2	3.6	41
T13	Sycamore	4	140	2	1	1	2	2	Semi-mature	Extensive crown dieback. In decline.	Remove	<10	U	1.7	9
T14	Purple plum	5.5	270	4	2	4	2	1.9	Mature	Slight lean to east. Reasonable vigour. Species with limited life expectancy.		10-20	B-C2	3.2	33
T15	Photinia	3.5	70	2	2	2	2	1.6	Mature	Four stems- average 35 mm. Evergreen shrub.	Remove to facilitate new layout	10-20	C2	0.8	2

Tree/ Group No.	Species	Height (m)	Stem Diam. at 1.5m (mm)	Branch Spread (m)				Canopy Cleara -nce (m)	Age Class	Observations	Management Recommendations	Estimated Remaining Contribution (years)	BS 5837 Category Grading	Protect -ion Distnce (m)	Root Protect. Area (m2)
				N	S	E	W								
G16	Evergreen shrubs	1-1.8	25					0.1	Mature	Mixture of evergreen shrubs including Choisya, Aucuba, Pyracantha, Mahonia and Photinia. Disease on Aucuba.	Remove shrubs, as necessary, to facilitate new layout	5-15	C2	0.3	0

BS 5837:2012, Table 1 Cascade chart for tree quality assessment

Category and definition	Criteria (including subcategories where appropriate)			Identification on plan
Trees unsuitable for retention (see Note)				
Category U Those in such a condition that they cannot realistically be retained as living trees in the context of the current land use for longer than 10 years	• Trees that have a serious, irremediable, structural defect, such that their early loss is expected due to collapse, including those that will become unviable after removal of other category U trees (e.g. where, for whatever reason, the loss of companion shelter cannot be mitigated by pruning) • Trees that are dead or are showing signs of significant, immediate, and irreversible overall decline • Trees infected with pathogens of significance to the health and/or safety of other trees nearby, or very low quality trees suppressing adjacent trees of better quality *NOTE Category U trees can have existing or potential conservation value which it might be desirable to preserve; see **4.5.7**.*			See Table 2
	1 Mainly arboricultural qualities	**2 Mainly landscape qualities**	**3 Mainly cultural values, including conservation**	
Trees to be considered for retention				
Category A **Trees of high quality** with an estimated remaining life expectancy of at least 40 years	Trees that are particularly good examples of their species, especially if rare or unusual; or those that are essential components of groups or formal or semi-formal arboricultural features (e.g. the dominant and/or principal trees within an avenue)	Trees, groups or woodlands of particular visual importance as arboricultural and/or landscape features	Trees, groups or woodlands of significant conservation, historical, commemorative or other value (e.g. veteran trees or wood-pasture)	See Table 2
Category B **Trees of moderate quality** with an estimated remaining life expectancy of at least 20 years	Trees that might be included in category A, but are downgraded because of impaired condition (e.g. presence of significant though remediable defects, including unsympathetic past management and storm damage), such that they are unlikely to be suitable for retention for beyond 40 years; or trees lacking the special quality necessary to merit the category A designation	Trees present in numbers, usually growing as groups or woodlands, such that they attract a higher collective rating than they might as individuals; or trees occurring as collectives but situated so as to make little visual contribution to the wider locality	Trees with material conservation or other cultural value	See Table 2
Category C **Trees of low quality** with an estimated remaining life expectancy of at least 10 years, or young trees with a stem diameter below 150 mm	Unremarkable trees of very limited merit or such impaired condition that they do not qualify in higher categories	Trees present in groups or woodlands, but without this conferring on them significantly greater collective landscape value; and/or trees offering low or only temporary/transient landscape benefits	Trees with no material conservation or other cultural value	See Table 2

Default specification for protective barrier

Figure 2

Key

1 Standard scaffold poles
2 Heavy gauge 2 m galvanised tube and welded mesh infill panels
3 Panels secured to uprights and cross-members with wire ties
4 Ground level
5 Uprights driven into the ground until secure (minimum depth 0.6 m)
6 Standard scaffold clamps

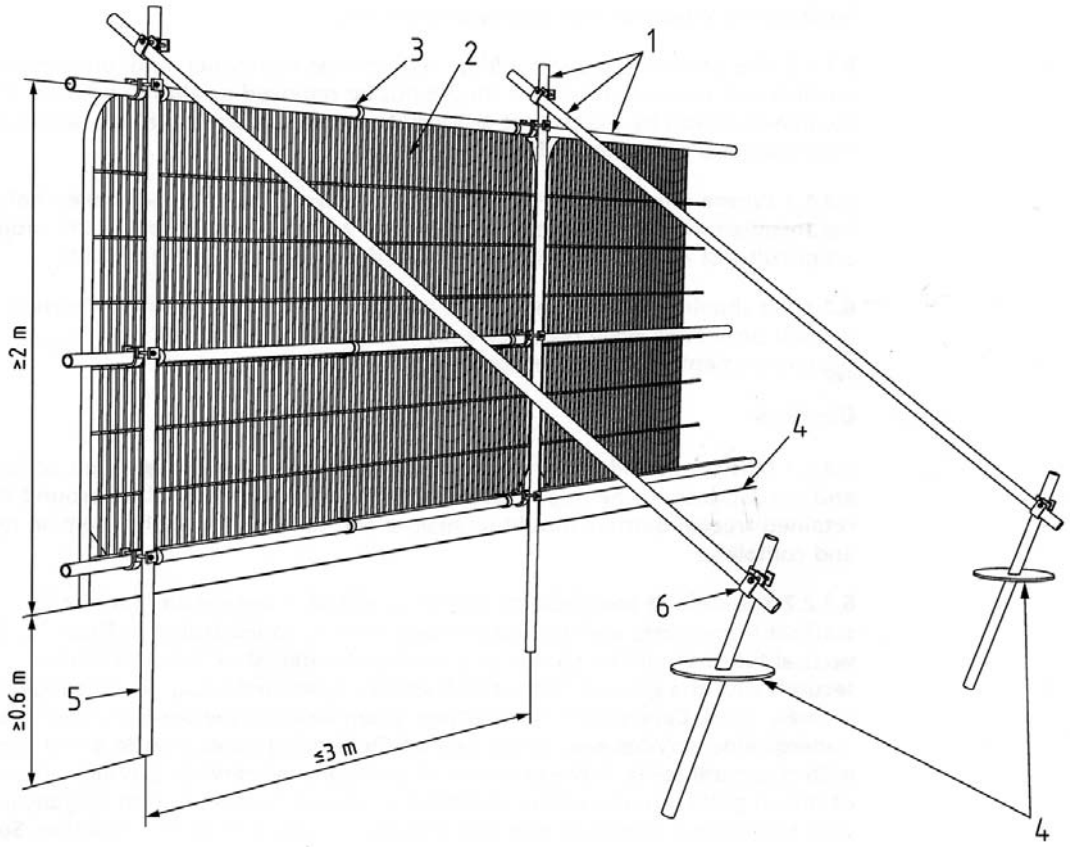

Examples of above-ground stabilising systems

Figure 3a
Stabiliser strut with base plate secured with ground pins

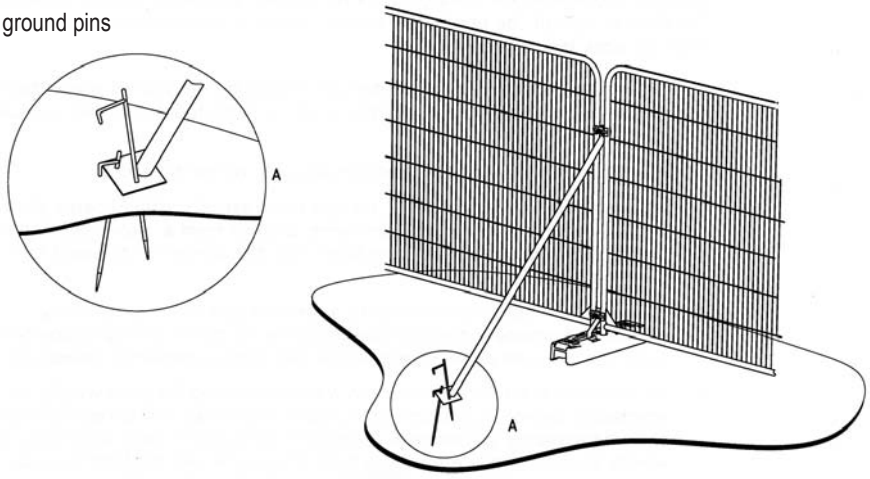

Figure 3b
Stabiliser strut mounted on block tray

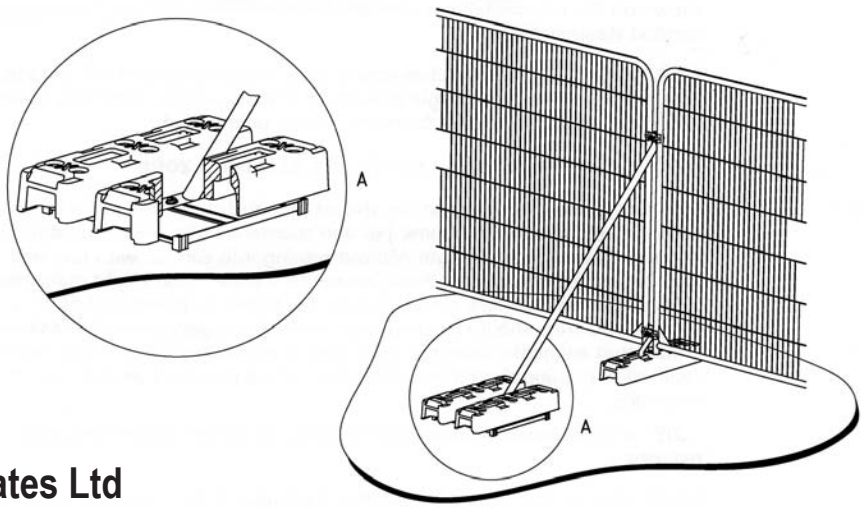

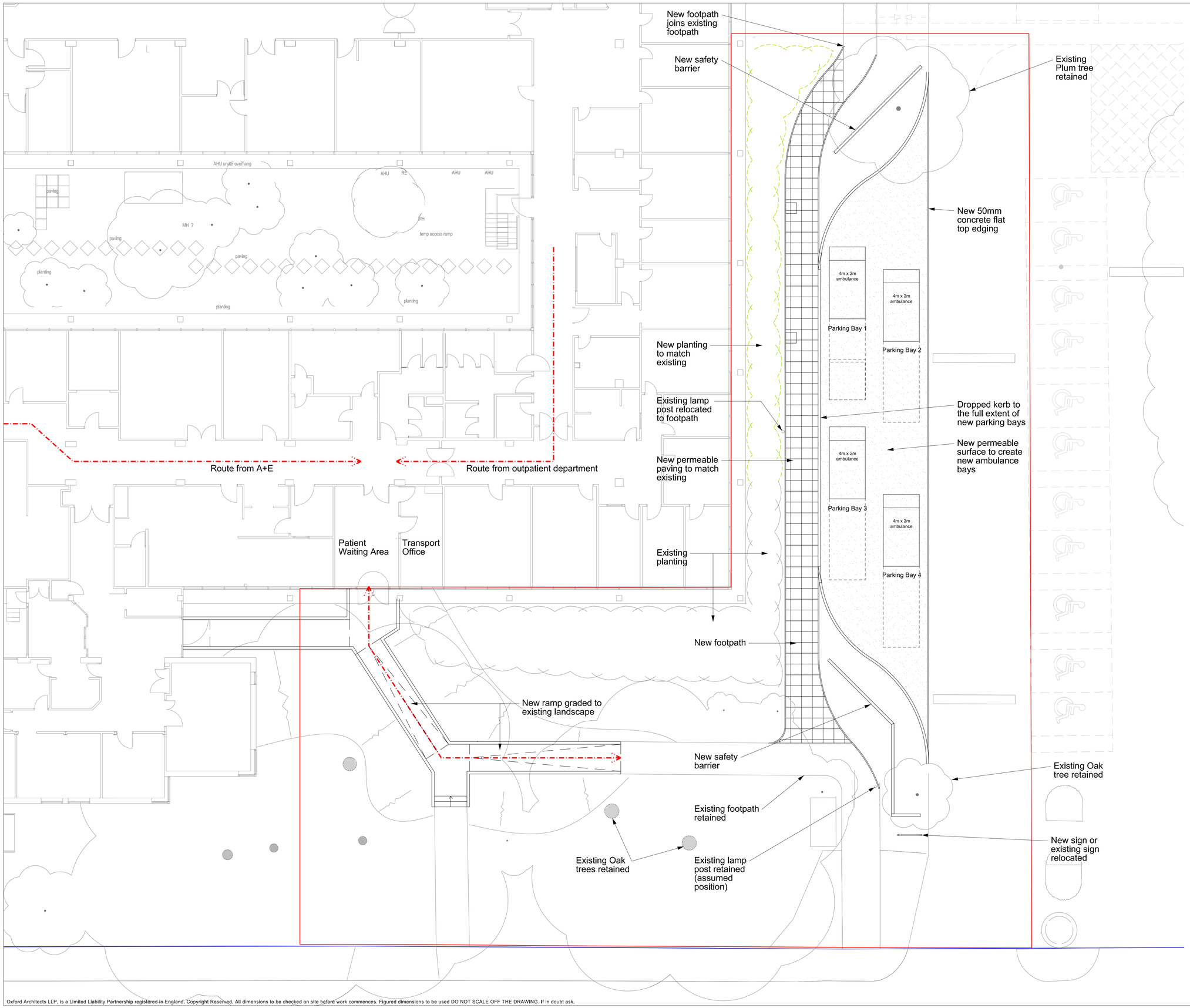

1:100 @ A1 0 4m
1:200 @ A3

NOTES

New planting to match existing

Rev	Description	Date
P9	Updated to clarify extent of new planting to match existing.	15/04/19
P8	Updated following meeting with planners and client and planning consultant feedback.	12/04/19
P7	Planning submission following further comments from planning consultant.	21/02/19
P6	Planning following comments from planning consultant.	08/02/19
P5	Planning submission	05/02/19
P4	Layout amended following client's comments	29/01/19
P3	Layout amended following client's comments	29/01/19
P2	Tree locations corrected to match survey	20/11/18
P1	Planning Application set	15/11/18

Partner	Drawn	Date
MB	RB	15/11/18

Project
Phase 4 (2018)
Enabling Works
Hillingdon Hospital

Title
Proposed External Works:
Carpark & Transport Layout

Drawing Reference
18094-OA-B1-051-P-00

Drawing No	Revision	Status
051	P9	S0

Scale
1:100 @ A1 & 1:200 @ A3

OXFORDARCHITECTS
Bagley Croft, Hinksey Hill, Oxford, OX1 5BS
T. 01865 329100 F. 01865 326822 oxford-architects.com
The Workshop, 254 Southmead Road, Bristol, BS10 5EN
T. 0117 9581500 F. 0117 9581501 oxford-architects.com

Oxford Architects LLP, is a Limited Liability Partnership registered in England. Copyright Reserved. All dimensions to be checked on site before work commences. Figured dimensions to be used DO NOT SCALE OFF THE DRAWING. If in doubt ask.