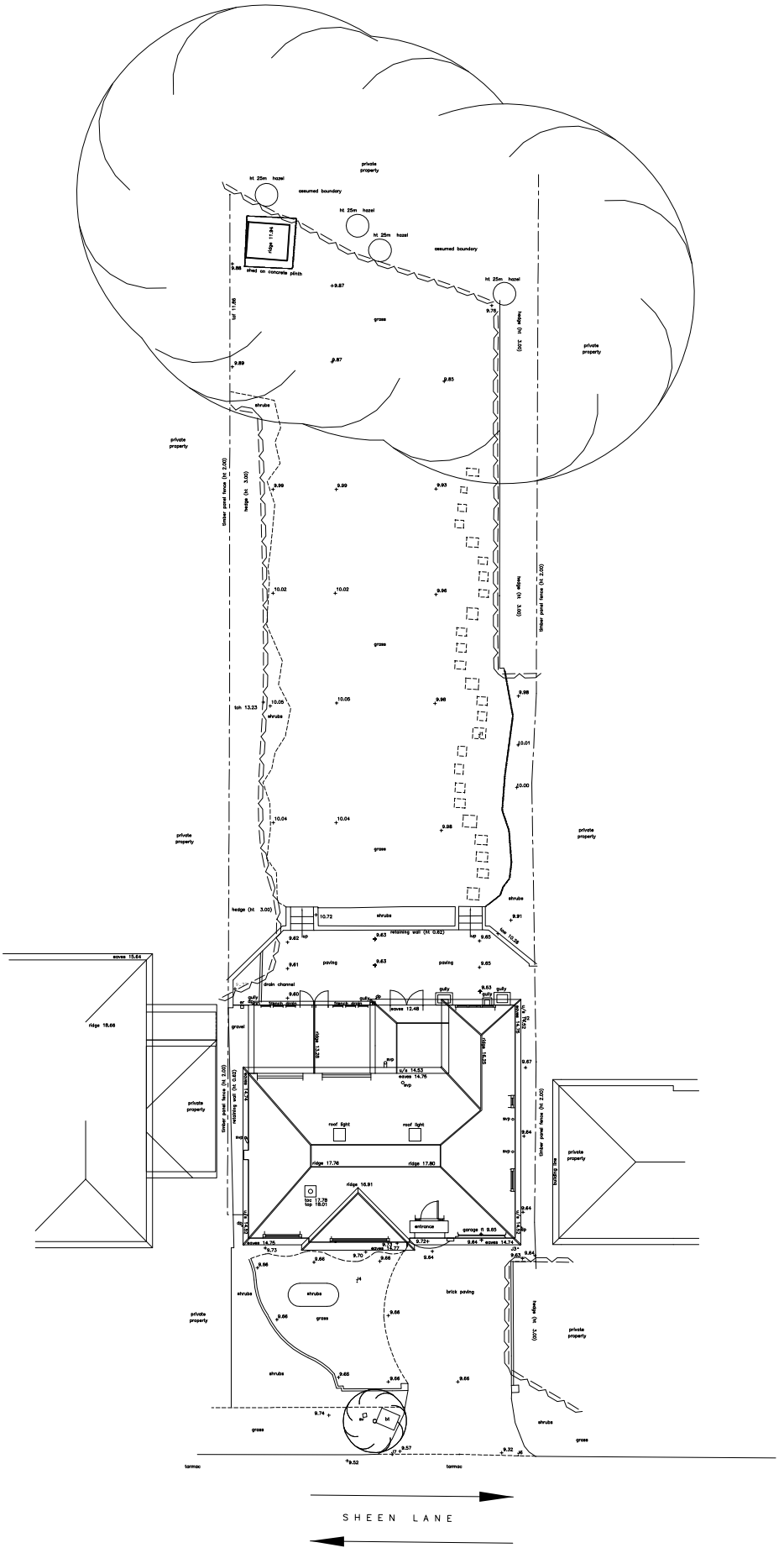

NOTES

GENERAL NOTES :-

ALL LEVELS ARE IN METRES RELATED TO AN ASSUMED DATUM LOCATED ON PKNAL ST/1A AS SHOWN ON DRAWING 39515/1 (value 100.00m).
GRID COORDINATES ARE BASED ON ASSUMED VALUES.

THIS DRAWING HAS BEEN PRODUCED WITH A PLOT SCALE ACCURACY OF 1:100

SERVICE COVERS INDICATED WHERE VISIBLE. PIPE INVERTS / DETAILS SURVEYED FROM SURFACE INSPECTION ONLY. GENERALLY DAMAGED COVERS AND COVERS WITHIN HIGHWAYS WILL NOT BE LIFTED

TREE SPECIES SHOULD BE CONFIRMED BY TREE SPECIALIST IF CRITICAL.

OVERHEAD CABLES ARE INDICATED USING REMOTE SURVEY METHODS AND ARE SUBJECT TO SEASONAL VARIATION, AND SHOULD BE TREATED AS APPROXIMATE.

THE SURVEYOR WILL NOT BE RESPONSIBLE FOR THE OMISSION OF DETAILS OBSCURED DURING SITE SURVEY

RICS PROFESSIONAL STANDARDS 3RD EDITION RULE 1.19 APPLIES TO THIS SURVEY.

TOPOGRAPHICAL SURVEY/UTILITY KEY :-

- pHO – height
- ch – chimney
- ⊖ – pan trap
- e/g – above ground
- s/r – assumed route
- av – air valve
- bb – bellaha beacon
- bd – back drop
- bl – bollard
- bs – bollard
- bos – bottom of shaft
- bt – telecom
- c/b fence – closeboard fence
- c/box – control box
- cabv – cable television
- cl – cover level
- cr – cable riser
- cv – cable riser
- ces – combined water sewer
- d/chan – drainage channel
- e/b – electric junction box
- elec – electric
- ext – end of trace
- el – electric pole
- ⊕ – earth rod
- f/bed – flower bed
- fh – fire hydrant
- fl – floor level
- fs – fire switch
- fss – foul water sewer
- g – gully
- g/run – gully run
- gr – gas riser
- h/chestnut – horse chestnut
- h/thorn – hawthorn
- ic – inspection cover
- il – invert level
- lt – illuminated
- m – manhole cover
- lp – lamp post
- mh – manhole cover
- mtr – meter
- o/h – over head
- ol – off lat
- oos – off survey area
- OSBM – ordnance survey bench mark
- p & r fence – post & rail fence
- pd – pit depth
- pr – pipe riser
- ptg – pipe to ground
- pts – pipe to surface
- rm – rodding eye
- rwl wall – retaining wall
- rs – road sign
- rwp – rain water pipe
- s/birch – silver birch
- s/p – safety paving
- sap – sapling
- sf – security fence
- sfc – soil filled chamber
- sl – spot light
- sp – soil pipe
- st – step top
- sv – stop valve
- sv – soil vent pipe
- sws – storm water sewer
- TBM – temporary bench mark
- tfr – taken from records
- tl – threshold level
- toc – top of cap
- tos – top of slab
- tst – top of tank
- tp – telecom pole
- ts – traffic signal
- t/a – trench scar
- u/a – underside
- ub – unable to lift
- ud – unable to drain
- ute – unable to survey
- utl – unable to trace
- vs – vent pipe
- sfu – water filled chamber
- wl – water level
- wm – water meter
- wp – water pipe
- wr – water riser

SURVEY CONTROL :-

STATION	EASTINGS	NORTHINGS	LEVEL

SHEET LAYOUT :-

UTILITY SURVEY KEY :-

- HATCHED AREA
- BOREHOLE
- CPT
- TRIAL PIT
- HAND PIT
- WINDOW SAMPLE

- ELECTRIC CABLE
- WATER PIPE
- FOUL SEWER
- STORM SEWER
- COMBINED SEWER
- DUCTS
- CABLE TELEVISION
- DATA CABLE
- TELECOM CABLE
- UNIDENTIFIED
- UNIDENTIFIED SERVICE
- OTHER
- CCTV
- TRAFFIC LIGHT
- OFFSET FILL
- VENT
- FUEL PIPE
- GAUGE LINES
- PIPE
- ASSUMED ROUTE
- TAKEN FROM RECORDS

DISCLAIMER :-

Electromagnetic techniques have been used in the location of underground services. The results are not infallible and trial excavations should be carried out to confirm service identification, positions and particularly depths. Information on the depths and accurate positions of the underground services information cannot be guaranteed.

This method of survey does not differentiate between live and dead services, and as such all services should be treated as live. This drawing may not include the location of all public services that may cross the site, therefore the relevant service drawings should be obtained from the appropriate utility company and used in conjunction with this drawing.

Private service pipes and cables in highways are not shown, but there presence should be anticipated.

Additional below ground structures or obstructions not shown on this drawing may be present. Reference should be made to historical plans and as-built drawings. Excavations in the vicinity of services should be carried out with due diligence ref: HSG47 document avoiding dangers from underground services

Please note that factors such as ground conditions, proximity of other utilities, material and method of construction have an influence on the quality of the data collected on site.

TSA Standards – "Even an appropriate and professionally executed survey may not be able to achieve a 100% detection rate."

UTILITY NOTES

INDICATIVE NORTH

0 1 2 4 6 8 10

MIDLAND SURVEY LTD

HEAD OFFICE
Cromwell House, Westfield Road, Southam, Warwickshire, CV47 0JH.
Tel: 01926 810811 Fax: 01926 810812
E-Mail: mail@midlandsurvey.co.uk
www.midlandsurvey.co.uk

Client	AA Architects
Project	41 Highfield Road, Ickenham, UB10 8AQ
Title	
Date	September 2021
Scale	1:100@A1
Dwg No	39515
Surveyor	JJB
Checked	TG

Revisions

TOPOGRAPHICAL (LAND) SURVEYORS / UTILITY SURVEYORS
BUILDING MEASUREMENT SURVEYORS / 3D LASER SCANNING

©Copyright Midland Survey Ltd . Reproduction of this information is prohibited without written authorisation from Midland Survey Ltd.