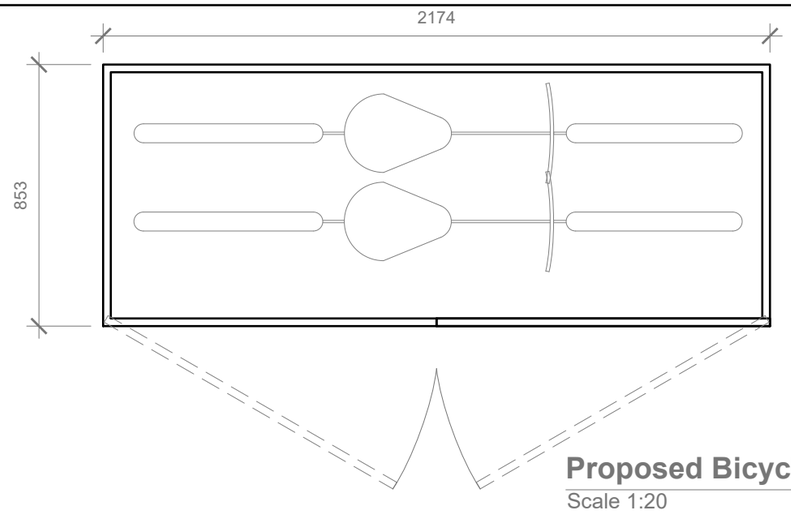

Proposed Bicycle Storage Plan

Scale 1:20

Provides storage for up to 3 bicycles or can be used as a store for toys and garden equipment. Wall panels are made from shiplap FSC certified timber and supplied in a honey brown timber basecoat. The roof is constructed from solid board (OSB) for ease of installation and comes without a floor to allow the bikes to drain without damage to the store.
The Bike Store comes complete with fixing kit, roof felt, installation instructions and includes home delivery.

Features

- Material: Wood
- Comes with double doors
- Made from high grade pine
- Flooring not included
- Foundation not included
- Roof style: Pent
- Cladding style: Shiplap
- Base coat treatment
- Made in the UK

Product Details

- Shed Type: Storage Shed
- Material: Wood
- Product Warranty: 108 Year conditional anti rot guarantee.
- Floor Included: No
- Ventilation: No
- Assembly Required: Yes
- Storage Capacity: 1350272cm³
- Additional Parts Required: No
- Cladding Style: Shiplap
- Treatment: Dip Treated

Specifications

Weights & Dimensions
Other Dimensions

- Overall: 120cm H x 185cm W x 63cm D
- Interior: 110cm H x 176cm W x 56cm D
- Door: 135cm H x 171cm W
- Approximate Width - Side to Side (Ft.): 185 '
- Approximate Depth - Front to Back (Ft.): 63 '
- Wall Thickness: 1.2 cm
- Overall Product Weight: 70 kg

Assembly

Assembly Required: Yes

- Tools Needed for Assembly: Hammer; Tape; Measure; Saw; Drill; Additional Parts Required: No Screwdriver; Ladder

Warranty

Product Warranty: 108 Year conditional anti rot guarantee.

Specifications

Commercial OR Residential
Certifications: Yes

- FSC Certified: Yes

Features

Shed Type: Storage
Shed Material: Wood

- Material Details: Pine

Floor Included: No
Foundation Required: Yes

Ventilation: No
Storage Capacity: 1350272 Cubic Centimetres

Cladding Style: Shiplap
Treatment: Dip Treated
Colour: Honey Brown
Number of Items Included: 1
Wood Construction Type: Solid and manufactured wood

- Wood Construction Type Details: High grade and slow grown; North European Pine

Wood Species: Pine

Wood Finish: Honey Composite Wood Product (CWP): Yes

Fire Resistant: No
Weather Resistant: Yes

- Weather Resistant Details: Felt supplied and weatherproof once treated

Water Resistant: Yes

- Water Resistant Details: Felt supplied and waterproof once treated

Rust Resistant: Yes

Number of Doors: 2

Door Style: Double Door Padlock Compatible Doors: Yes

Year-Round Use: Yes
Roof Style: Pent
Skylight: No
Environmentally Friendly: Yes
Product Care: Requires regular preservative treatment
Country of Manufacture: United Kingdom

Recommended Foundation Size:
195cmW x 80cm D

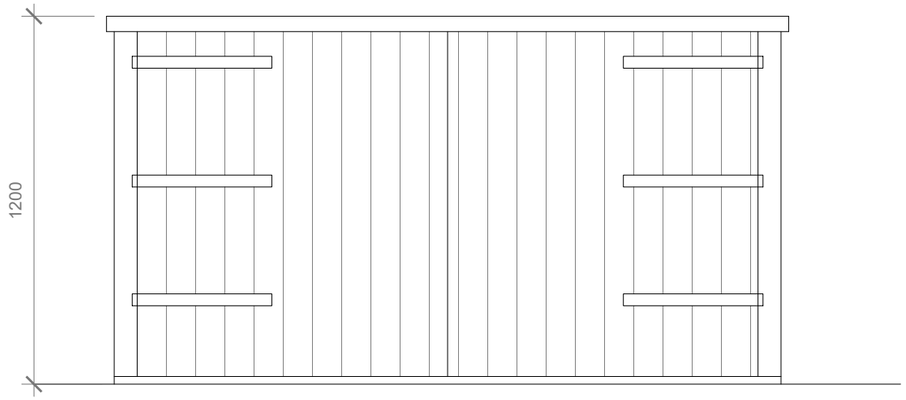

Proposed Front Elevation

Scale 1:20

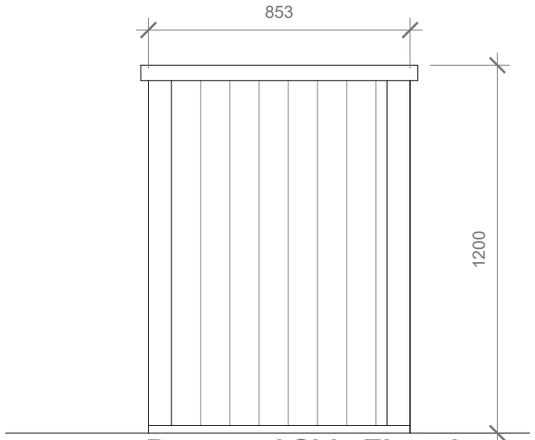

Proposed Side Elevation

Scale 1:20

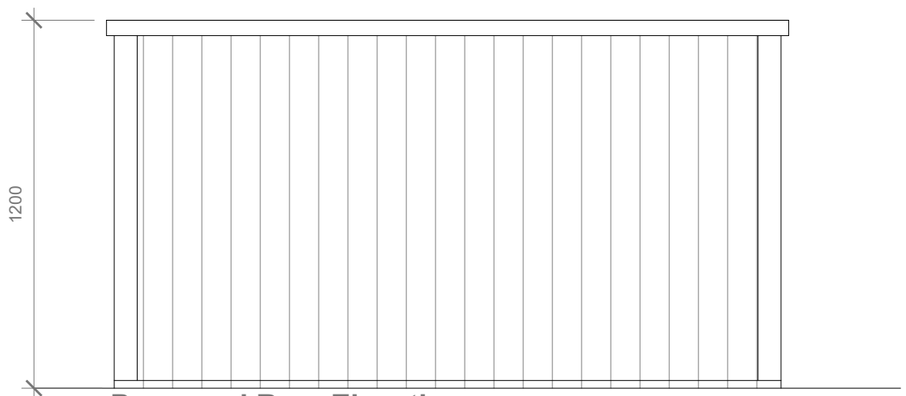

Proposed Rear Elevation

Scale 1:20

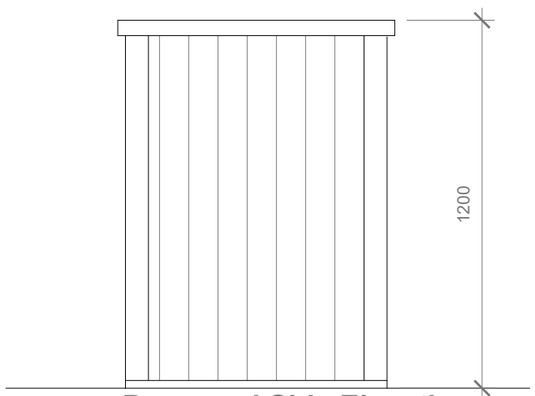

Proposed Side Elevation

Scale 1:20

1:20
0 200mm 400mm 1000mm 2 Meter

GENERAL NOTES:
1. ALL DIMENSIONS ARE IN MILLIMETER.
2. VERIFY ALL DIMENSIONS AND CONDITIONS BEFORE BUILDING OR STARTING CONSTRUCTION. NOTIFY THE DESIGNER IMMEDIATELY OF ANY DISCREPANCY OR VARIATION.
3. ALL WORK TO COMPLY WITH CURRENT BUILDING REGULATIONS AND CODES OF PRACTICE

Title:

Bicycle Storage Details

Site Address
73 Keith Rd,
Hayes.
UB3 4HP

Scale: 1:20 @A3
Date: 02/07/2026
Drawing No.: 2025/185 -10FL
Drawn By: RO

Revision Date:
A 20/10/2026

e:mail - faluckpatel@yahoo.com
(M) +44 (0) 7871 466 254

Faluck Patel