E02 P1

- Do Not Scale - If In Doubt Ask -

drawings produced by
aw design
aw design. architectural glazing design consultancy.
2 Millburn Terrace. Lawthorn. Irvine. Ayrshire. KA11 2BL
t. 07733 231332 e. aw_design_uk@yahoo.co.uk

FOR APPROVAL

All dimensions to be confirmed or provided by architect / main contractor unless otherwise agreed

STATUS A Approved/No Further Comment ☐
STATUS B Provisional with comment ☐
STATUS C Rejected ☐
Date .....
Signature .....

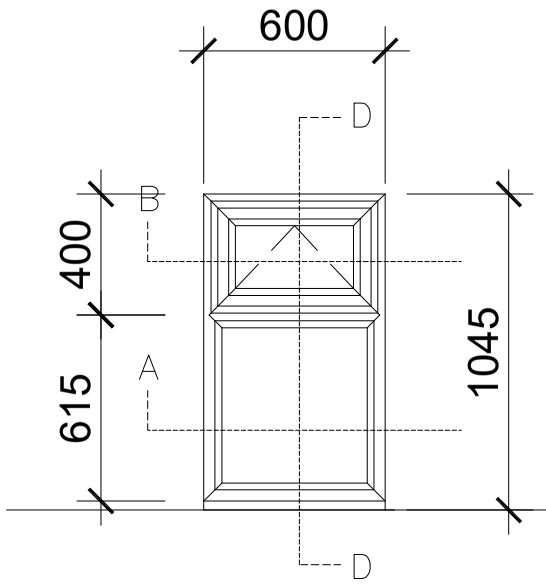

Toilet
Item 8
1 No Reqd Thus

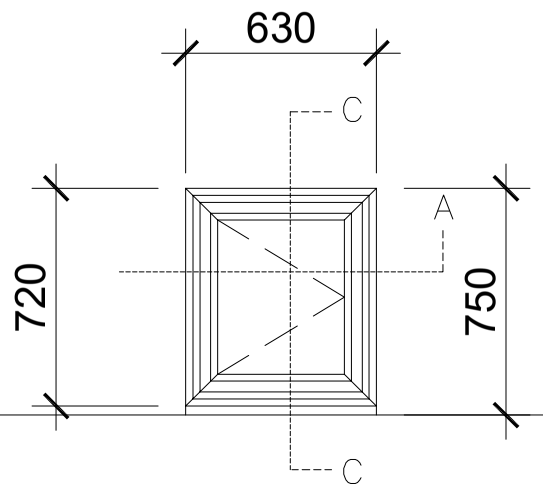

Landing
Item 9
1 No Reqd Thus

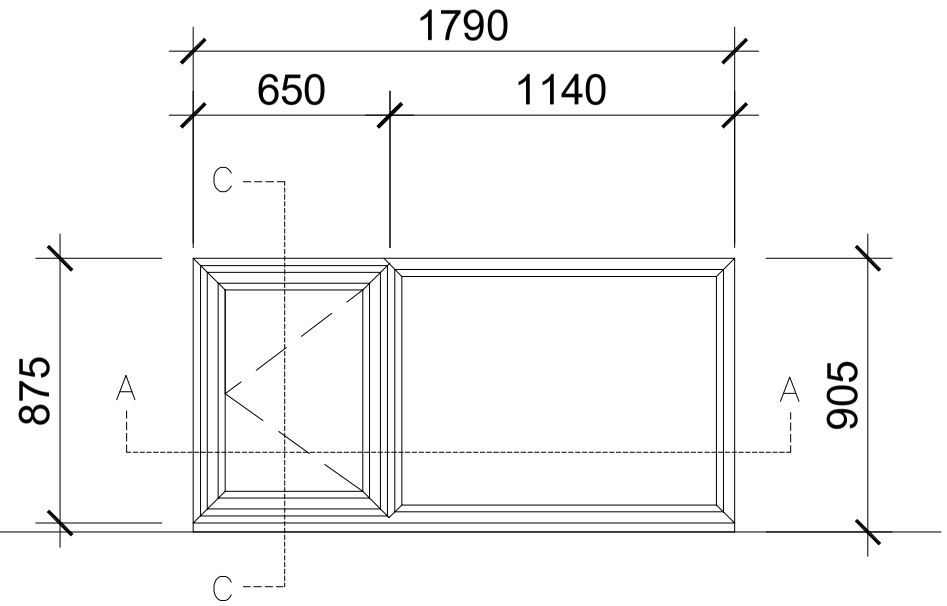

Bedroom 2
Item 10
1 No Reqd Thus

Specification

SPECIFICATION:

WHITE PVCu CHAMFERED CASEMENT WINDOWS

FINISH:

WHITE

IRONMONGERY:
STANDARD HINGES
SMART CASEMENT LOCKING WHITE

GLAZING SPECIFICATION:

GLAZING UNITS
8.8 MM CLEAR LAMINATE
24.0MM SPACER BAR BLACK WARM EDGE
ARGON FILLED
6.8MM CLEAR LAMINATE

NOTE:
STIPPOLYTE TEXTURED GLASS FINISH TO TOILET & BATHROOM

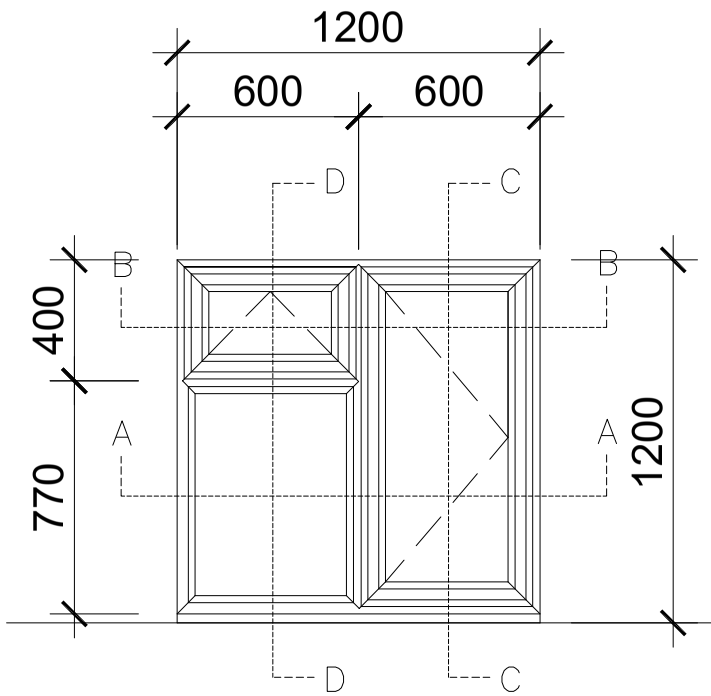

Bathroom
Item 11
1 No Reqd Thus

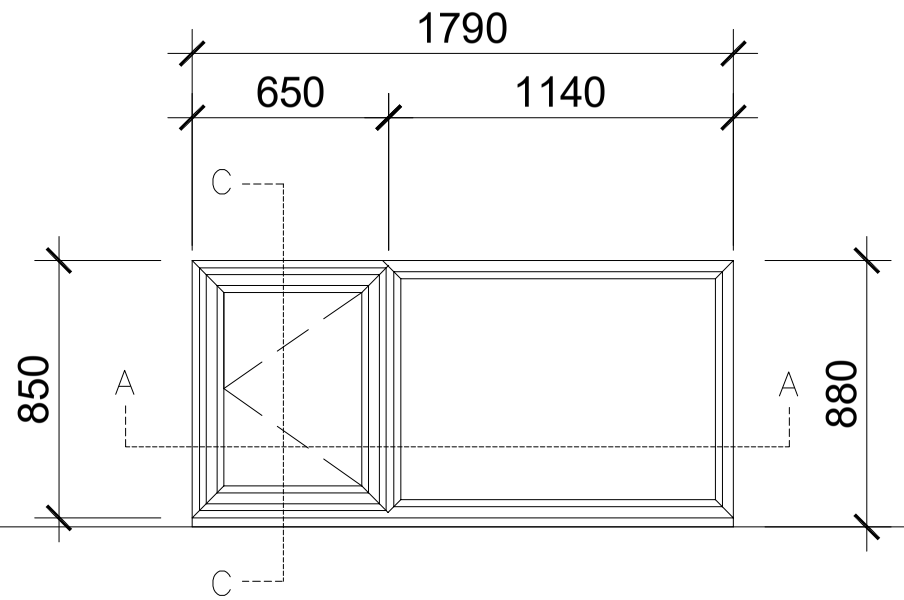

Kitchen
Item 12
1 No Reqd Thus

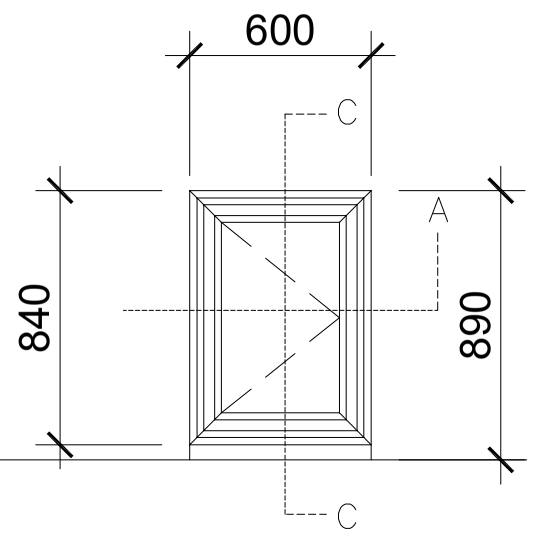

Dining Room
Item 14
1 No Reqd Thus

Rev.	Revision	Date

evander
living protected

Broadgate House Broadway Business Park,
Chadderton, Oldham, England, OL9 9XA

t.0800 590 925
e. Glazing.shopcare@vps.evander.com

HO215520
539 BATH ROAD

WEST DRAYTON
UB7 0EL

GENERAL ARRANGEMENT DRAWING

Designed by	Date	Scale @ A3
AWW	16.05.25	1:25
DWG No.	Sheet Ref.	Rev.
AW1194	E02	-

THIS DRAWING AND DESIGN IS THE SOLE PROPERTY OF A W DESIGN AND MUST NOT BE COPIED LOANED OR COMMUNICATED IN WHOLE OR PART TO ANY THIRD PARTY WITHOUT CONSENT FROM THE COMPANY

ELEVATIONS & SPECIFICATION