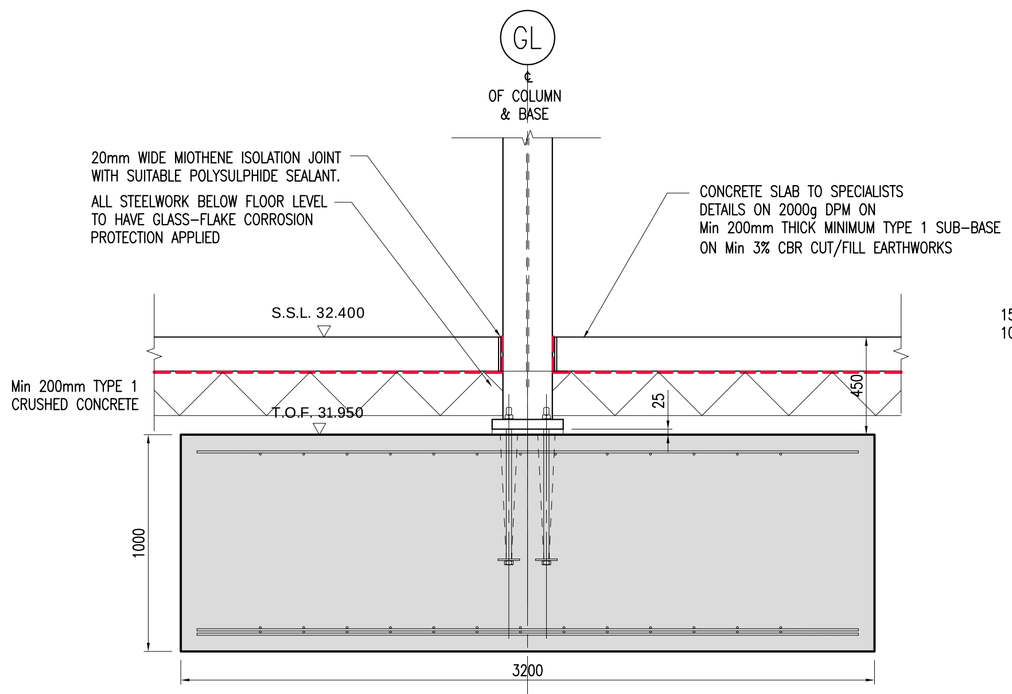

SECTION 1-1
Scale 1:20

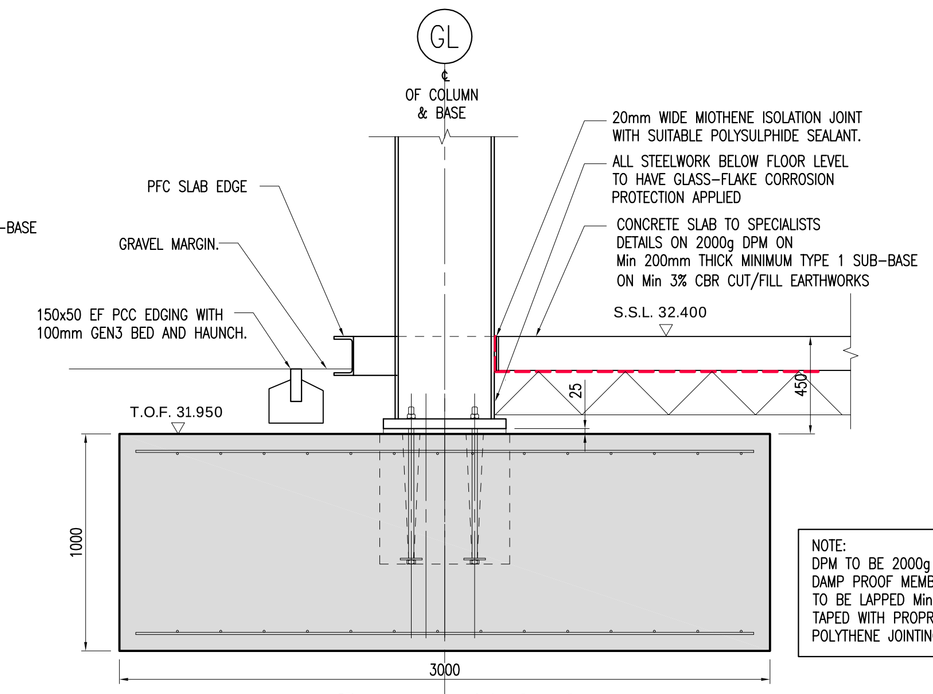

NOTE:
DPM TO BE 2000g VISQUEEN DAMP PROOF MEMBRANE TO BE LAPPED Min 300mm & TAPED WITH PROPRIETARY POLYTHENE JOINTING TAPE

SECTION 2-2
Scale 1:20

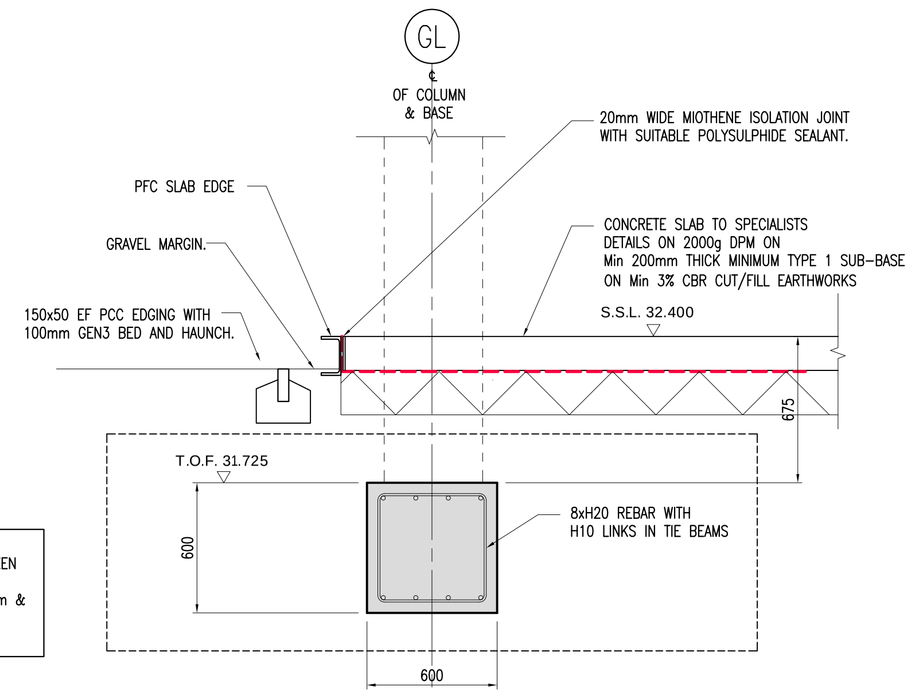

SECTION 3-3
Scale 1:20

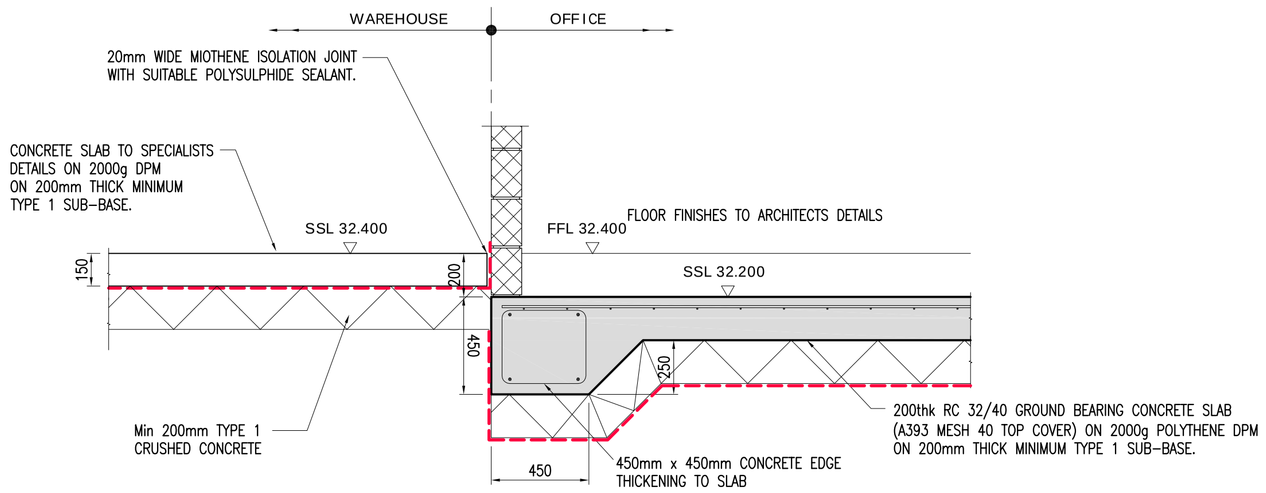

SECTION 4 - 4
Scale 1:20

GENERAL NOTES

1. THIS DRAWING TO BE READ IN CONJUNCTION WITH ALL SPECIFICATIONS AND ALL RELEVANT ARCHITECTS, ENGINEERS, SERVICES AND SPECIALIST DRAWINGS.

2. THE WORKS DESCRIBED AND SPECIFIED ON THIS DRAWING AND ASSOCIATED DRAWINGS SHALL BE UNDERTAKEN IN ACCORDANCE WITH ALL CURRENT HEALTH AND SAFETY LEGISLATION, REFERENCE SHALL BE MADE TO THE PROJECT HEALTH & SAFETY PLAN PREPARED BY THE PLANNING SUPERVISOR FOR THE PROJECT.

3. WHERE NOTES ON THIS DRAWING DIFFER FROM THE SPECIFICATION, CLARIFICATION SHOULD BE SOUGHT FROM THE ENGINEER.

4. DO NOT SCALE THIS DRAWING - IF IN DOUBT - ASK

5. ALL DIMENSIONS AND LEVELS SHOWN ON THIS DRAWING ARE BASED ON THE ARCHITECTS DRAWINGS AND THE CONTRACTOR IS TO SATISFY HIMSELF THAT DIMENSIONS, LEVELS, ETC. ARE SUFFICIENT ACCURATE AND COMPLETE FOR FABRICATION, WITHIN THE SPECIFIED TOLERANCES OF ALL PREFABRICATED ELEMENTS. FOR DIMENSIONS AND LEVELS NOT SHOWN, REFER TO THE ARCHITECTS DRAWINGS.

6. ALL DIMENSIONS ARE IN MILLIMETRES UNLESS NOTED OTHERWISE.

PROLOGIS™

REV	DATE	DESCRIPTION	CHK	DRN
T1	28.10.13	ISSUED FOR TENDER	TC	DOB
P1	02.09.13	PRELIMINARY ISSUE	TC	MD

NOTE: Where a "P" revision applies, this drawing is NOT to be used for construction

T. R. COLLIER & ASSOCIATES.
CONSULTING ENGINEERS
Rochester House 275 Baddow Road
Chelmsford Essex CM2 7QA
Telephone 01245 500360
Facsimile 01245 500390
Email admin@collierassociates.co.uk

PROJECT
PHASE 3
PROLOGIS PARK, HAYES

TITLE
FOUNDATION SECTIONS - Sheet 1
UNIT C

ARCHITECT
MICHAEL SPARKS Associates

DRAWN	DESIGNED	CHECKED
MWD	TC	TC
DATE	SCALE	STATUS
Aug. 2013	As Shown	TENDER

ISO 9001 REGISTERED FIRM — Certificate No. GB10000830
INTERNATIONAL ACCREDITATION BOARD — Registration No. 0044/1

2607-C-02 T1

A1 SHEET

This drawing is the property of T R Collier & Associates and it is not to be reproduced, disclosed or copied without written consent.

PDF created with pdfFactory trial version www.pdffactory.com