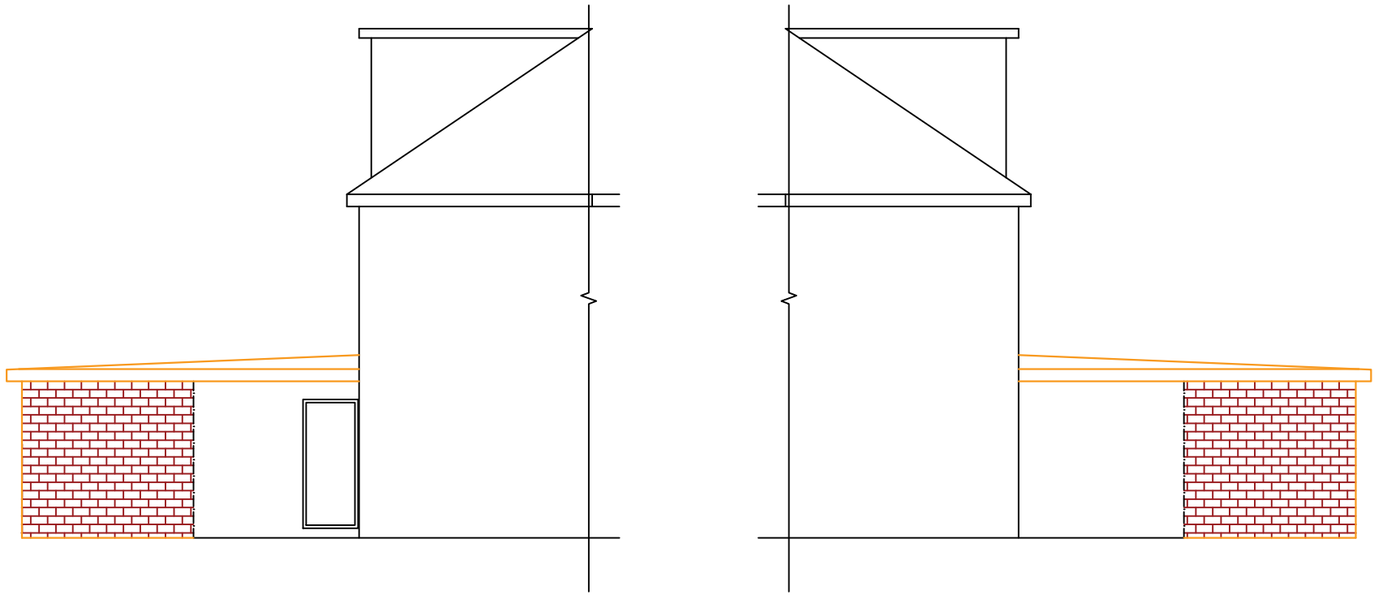

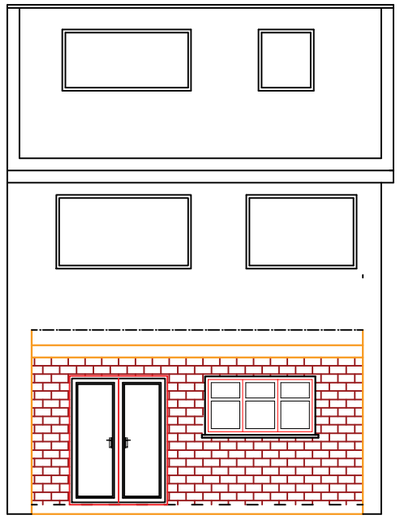

NOTES.
ALL DIMENSIONS AND LEVELS MUST BE CHECKED AND VERIFIED ON SITE BY CONTRACTOR PRIOR TO COMMENCEMENT.

PARTY WALL (ETC)ACT1997 TO BE AGREED WITH ADJOINING NEIGHBOURS PRIOR TO COMMENCING WORK.

ALL RSJ AS PER STRUCTURAL ENGINEER'S CALCS.

ALL WORK TO BE AGREED WITH LOCAL AUTHORITIES INSPECTORS.

WALL CONSTRUCTION:
CAVITY WALLS WITH OUTERLEAF OF BRICKWORK AND INNER LEAF OF THERMALITE BLOCKS WITH 100MM CAVITY BETWEEN. CAVITY TO BE ROCKWOOL FILLED TO ACHIVE 0.35W/M U-VALUE CAVITY CLOSE USING INSULATED CAVITY CLOSERS AND STAINLESS STEEL WALL TIES @ 450 MM CRS. VERTICALLY AND 900MM CRS HORIZONTALLY WALL TIES DOUBLE UP AROUND REVEALS.

150X100 REINFORCED CONCRETE LINTELS USED TO SPAN OVER DRAINS IN FOUNDATIONS.

NEW BOILER TO BE MINIMUM 90% EFFICINT

SMOKE DETECTION SYSTEM TO BE PROVIDED (INTERLINKED WITH MAINS) IN ACCORDANCE WITH BS5839.

drains 100 dia pipes 1:40 fall bedded and surronded in 150mm pea shingle.
Pipes passing under building to be in cast iron bedded and surronded in mass concrete.
Any drains passing thro. foundations drains to be bridged with 2no 100x150mm precast concrete lintel.to bear min. 300mm at ends and use 100mm min. cover of loose pea shingle around pipes.

H.P.S LIMITED DESIGNS.
ARCHITECTURAL DESIGN SERVICES. O7782424875

Client: MR KWASI A BOATIN		Site: 22 PAVILION WAY EASTCOTE HA4 9JN		
Project: SINGLE STOREY REAR EXTENSION		Title: PROPOSED FLOOR PLANS.		
Scale: 1:100 @ A3	Date: 05/07/2021	Drawn by: JSB	Drg. No: BOATIN 002	Revision: 0