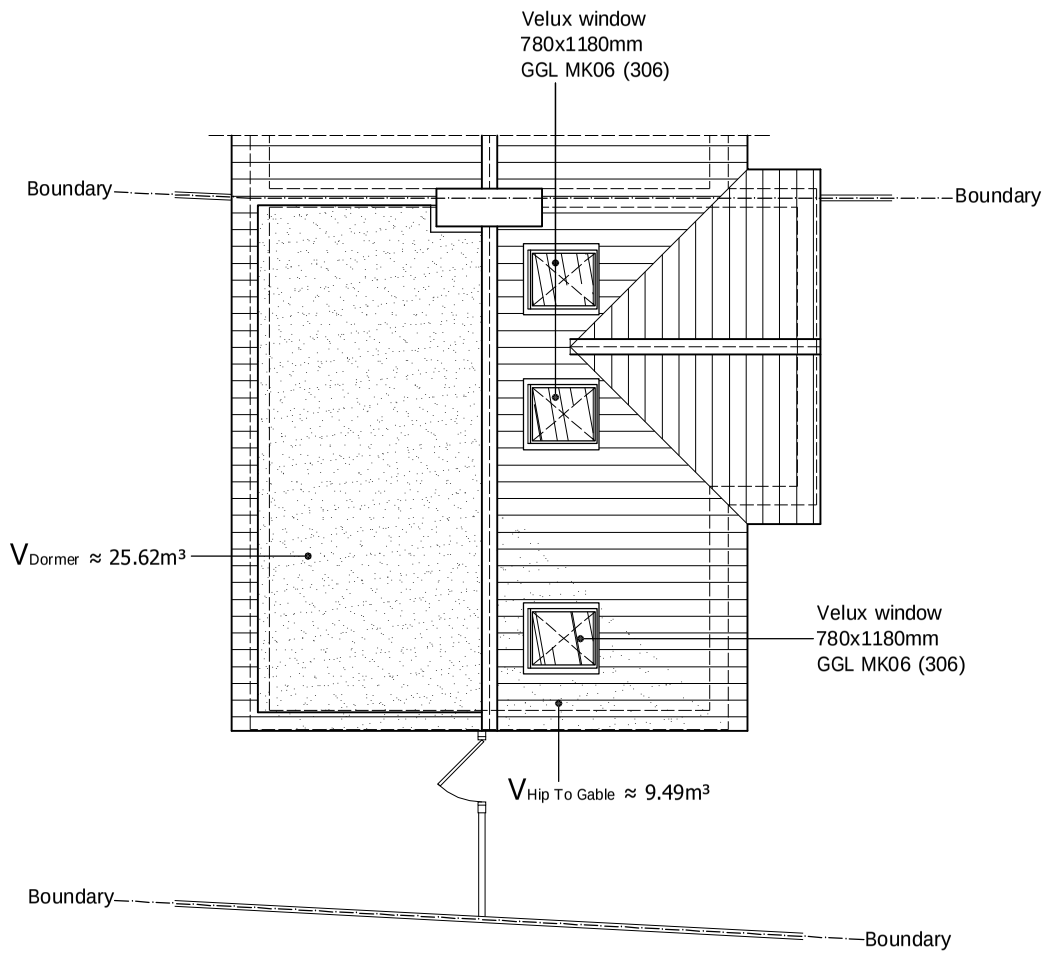

PROPOSED ROOF PLAN

scale 1:100

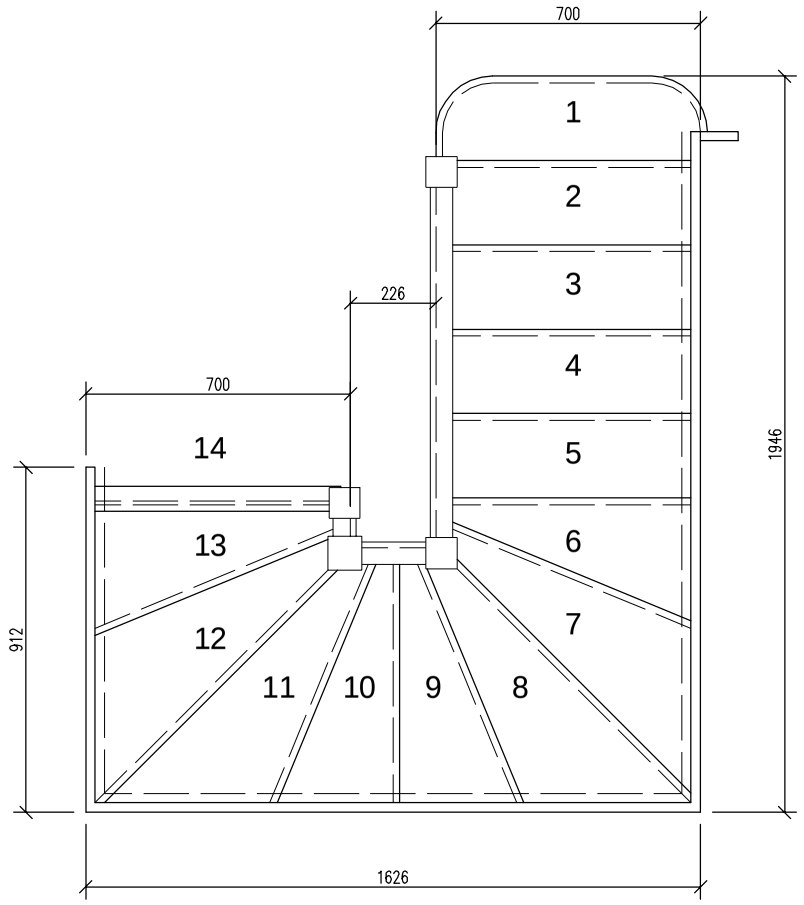

STAIR DETAIL

scale 1:20

1:20

400mm 0 400mm 800mm 1200mm 1600mm 2000mm

1:100

2m 0 2m 4m 6m 8m 10m

© This drawing and the works shown are the copyright of DISCOUNT PLANS LTD and may not be reproduced except by written permission

ALL STRUCTURAL ELEMENTS (such as beams, lintels, joists, rafters, columns, walls, foundations and etc.) SHOWN ON DRAWINGS ARE ONLY INDICATIVE, THEY ARE SUBJECTED TO FURTHER STRUCTURAL ENGINEER's CONSIDERATION.

DRAWING STATUS		CONSTRUCTION	
REV.	DATE	NAME	DESCRIPTION

DPL
Architectural Design Studio
4 ST ANNES, DORIC WAY,
EUSTON, LONDON NW1 1LG
+44 07838 135 957

GENERAL NOTES:
Any dimensions shown are indicative only and are subject to verification on site. The contractor to set out, check and co-ordinate all dimensions on site during the course of the works and prior to setting out on site. This drawing to be read in conjunction with all other Architect's and Engineer's drawings, Structural Engineers calculations and any specialist supplier's drawings.
Prior to commencement of building works the contractor or homeowner is responsible and should:-

1. Ensure that all working drawings and calculations are completed, approved by Building Control or Planning Departments & that they are the current revised drawings before any works start on site.
2. Inform the Building control department that the works are about to commence on site after receiving an approved decision from planning / building control in writing for your proposed works.
3. Verify boundary lines & ground conditions including checking positions and new connections of all gas; electrical, water & other services drainage ect. within the site prior to the commencement of excavations. Owner is responsible for establishing own boundary lines as DPL are not responsible for checking land ownership even if drawings have been approved by the planning and building control departments. If uncertain a land search should be carried out by the homeowner/contractor.
4. DPL are not responsible for builders changing design methods from proposed works. The client is responsible for works being carried out on a building notice. No project should start without calcs.
5. Owner is responsible for purchasing additional materials and covering extra engineering design costs for any additional structural design change on site from the start to end of building works requested by building control or any other third party's instruction during building works.
6. Request a copy of the Party Wall Award where works affect party wall or involve excavations within 3 meters of adjoining buildings or building over a public sewer. (clients responsibility)
7. Where works involve demolition to ensure that all elements of the building and adjoining structures are accounted for and that all necessary propping and temporary supports are in place. "do not scale off this drawing as the scaling may be off"
8. Works carried out under a building notice or prior to approval of drawings are at the contractors/owners risk. (all DPL drawings must be approved before works commence) Builders building without plans being approved by planning & building control departments are fully responsible for the likelihood of condemned works.
9. Any discrepancies, either between written and site dimensions or between this drawing and other consultant's or suppliers drawings, should be brought to the immediate attention of DPL before executing the structural, drainage, mechanical and electrical works. This includes types of materials if materials shown on drawings do not match which is on site then this will need to be brought to DPL attention straight away before works commence and purchase of materials be made so an alternative design can be rechecked and approved by building control or the engineer before works can commence.
10. All of DPL structural designs are subject to footings being 1m deep, if however the existing foundation is different a trail-hole will need to be dug to establish the existing foundation type and building control will need to advise on a different method of construction. If reqested by building control aigher a raft or piled foundation, this will need to be designed by an engineer with an additional cost being inplemented.
11. All wall/s which have been designed to be removed on plans are to be checked on site by building control inspector/builder for load bearing or non-load bearing status before purchase of steel/s. If non-load bearing then steel's should not be ordered. No refund or claim can be given against DPL on the design/materials charged for these steel/s.

OTHER NOTES:
All new proposed roof and wall finishes on this drawing to match existing materials. All new proposed skylights shown on this drawing will be designed not protrude more than 150mm from the existing roof profile. All new proposed windows shown on this drawing which overlook other property's are designed to be non opening and of obscure glazing. For a permitted development loft design the dormer designed on this drawing is set back from the eaves by 200mm, this note is a confirmation that it is designed this way. All works to be carried out in accordance with the latest appropriate codes of practice and to comply with current building regulations.

An inspection of the underground drainage was not possible on survey. Contractor should check drainage runs and invert levels prior to starting work on site and notify building control of results. ALL DRAINAGE SHOWN IS ASSUMED AND MUST BE VERIFIED BY CONTRACTOR.

TERMS – this drawing has been created by discount plans ltd for the "client" only, a bound contract has been made between both party's in which a signed contract for creation of works involving person-working hours for this drawing has been made, no refund will be allowed or claim made of drawing and any other drawing/s relating to this project for whatever reason can be made against DPL. Discount plans ltd hold full copyright of this material and have the full right to control the use of these works, any company, department or person that infringes these rights will be subject to legal compensation brought against them. client accepting these terms has agreed on all the above by signing contract between both party's and understands that no refunds can be given.

PRINT @ A3 SHEET SIZE

www.discountplansltd.com

12. All drainage connections is assumed & is subject for checking by builder, Thames water & building control, foul and surface connections should be approved by thames water before works commence.

THIS DRAWINGs CONTENT INCLUDING NOTES IS BOND TO SIGNED AGREED CONTRACT BETWEEN CLIENT & DISCOUNT PLANS LTD

SITE ADDRESS
63 HILLINGDON ROAD,
UXBRIDGE, MIDDLESEX, UB10 0AE

DRAWING TITLE
PROPOSED DRAWINGS - loft conversion

DRAWN AT	HEAD OFFICE	DRAWN BY	
SCALE	as shown @ A3		15. NOVEMBER. 2021
DRAWING No.	DPL . 07 .	REVISION	-

www.discountplansltd.com