NOTES:

All construction to comply with all relevant and current building regulations.
For building regulation compliance please refer building regulation/ structural engineers drawing.
All Dimensions to be measured by contractor on site prior to construction. Not for construction.

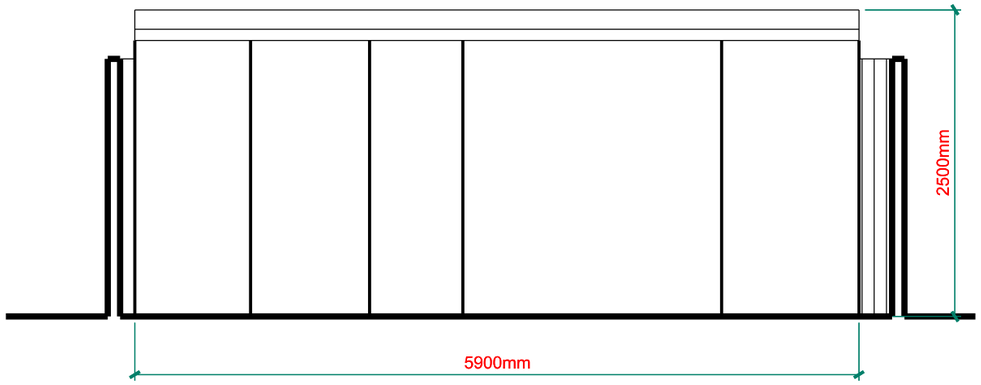

01 AS-BUILT FRONT ELEVATION

SCALE 1:50

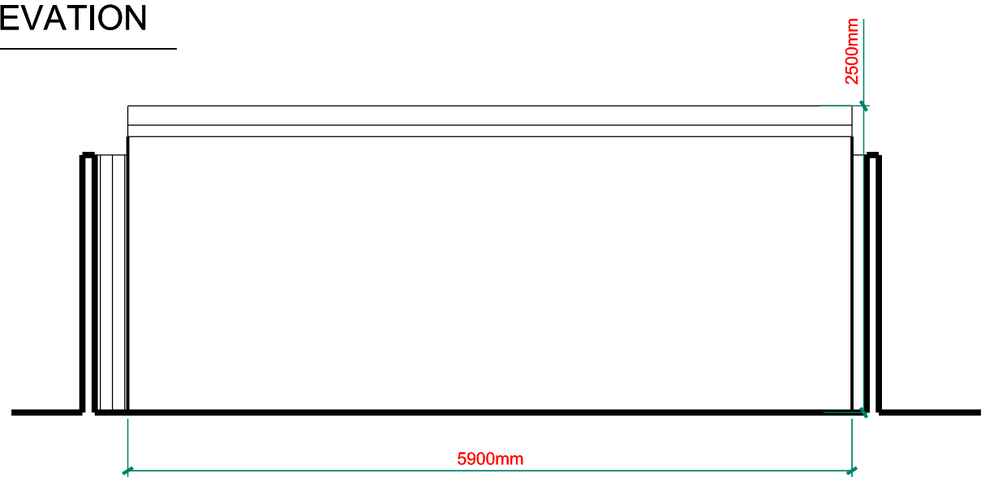

02 AS-BUILT REAR ELEVATION

SCALE 1:50

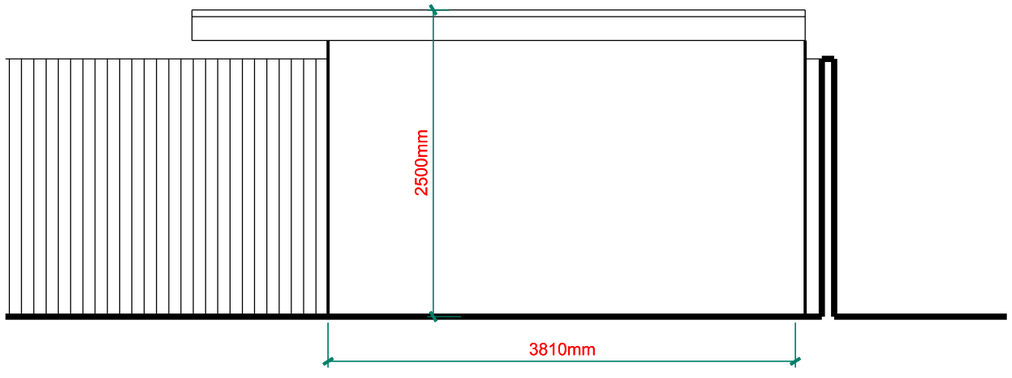

03 AS-BUILT SIDE ELEVATION

SCALE 1:50

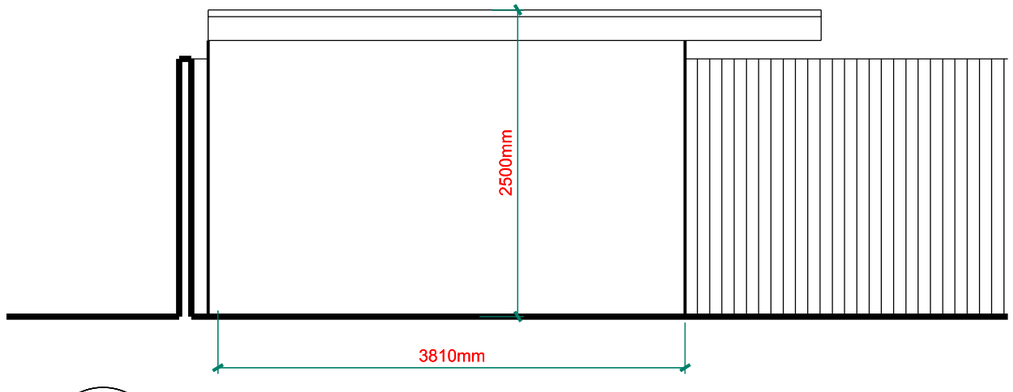

04 AS-BUILT SIDE ELEVATION

SCALE 1:50

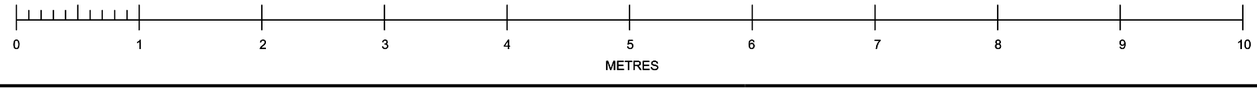

REV.	DATE	REASON FOR ISSUE
D1	15/11/2026	Planning

AJANTA STUDIO

Boundary House
Cricket Field Road
Uxbridge
UB8 1QG
www.facadesign.co.uk
info@facadesign.co.uk
t +44 (0) 7438294487

Project Address: 45 Worcester Road
Cowley
Uxbridge
UB8 3TH

Project Number: RDK 15128

Description: Outbuilding at the rear Garden

SCALE: 1:50@A3

WOR1003