Hillingdon Local Plan

# Accessible Hillingdon Supplementary Planning Document

September 2017

HILLINGDON
LONDON

www.hillingdon.gov.uk

# Contents

**Foreword** 4
**Introduction** 5
**Legislation and Guidance** 6
**Regional Planning Policy** 7
**Residential Development** 7
**Accessible and Adaptable Dwellings M4(2)** 8
Wheelchair Accessible and Wheelchair Adaptable Dwellings M4(3) 8
**Residential Care Homes** 48
**Public, Commercial and Employment Development** 49
Streetscape 50
Approach to Buildings and Facilities 52
Ramp Design Example 53
Accessible Parking 57
Accessible Parking Design 57
Blue Badge and Brown Badge Parking 58
Entrances 59
Entrance doors 59
Lobbies 60
Reception Areas 60
Internal Doors and Corridors 61
Lifts 63
Platform Lifts 63
Passenger Lifts 64
Internal Stairs 65
Toilets and Changing Facilities 66
Changing Facilities 68
Changing Places Toilets 68
Communication and Wayfinding 70
Signage 70
Lighting 70
Hearing Enhancement Systems 70
Entry Phones 71
Alarms 71
Storage Facilities 71
Refreshment Areas 71
Controls and equipment 71
Means of Escape 72
A1 Retail (includes Supermarkets) 74
A3 Food and Drink 75
Sports and Leisure Venues 75
Cinemas, Theatres and Other Places of Assembly 76
Hotels, Motels and Student Accommodation 76
Educational and Cultural Buildings 79
Conservation and Historic Buildings 79
Access to Parks and Open Spaces 80
**Design and Access Statements** 81
**Glossary** 94
**Sources & References** 95

# Foreword

Hillingdon continues to embrace the future, with forward looking design principles focused on 21st-century living. As it becomes more apparent that 'inclusive design' is synonymous with 'good design', the goal to create buildings and public places that allow everyone to use facilities and services, regardless of personal circumstance, remains a priority.

Pregnancy, injury, illness, disability, moving around with children, or simply getting older should not prove a barrier to accessibility. Hillingdon Council is therefore building on existing policies and national housing standards to ensure that our built environment is fully accessible.

With this goal in mind, the London Borough of Hillingdon reiterates its commitment to ensure that 'access for all' is an absolute requirement of designers and developers to ensure that all new homes, public buildings, places and spaces truly meet the requirements of all our residents, and especially the accessibility needs of our disabled and older residents.

We look forward to early engagement and continued teamwork with forward thinking professionals who embrace the principle and spirit of inclusive design.

**Councillor Keith E Burrows,**
**Portfolio Holder, Planning,**
**Transportation and Recycling**

# Introduction

A truly inclusive environment materialises only when the finer points of access and inclusion have been part and parcel of the initial design brief, and re-evaluated throughout the detailed design stage of a development.

Development applications where accessibility is an obvious 'bolt on', or where it has otherwise been poorly considered, will invariably slow the planning process and may result in planning refusal on those grounds alone.

'Accessible Hillingdon' echoes various Codes of Practice pertinent to the design of inclusive environments, and in some instances goes beyond minimum requirements. It offers practical and technical best practice guidance to enable planning applicants, developers, architects, urban designers, and other professionals to adopt a realistic approach to Inclusive Design.

'Accessible Hillingdon' is supplementary to the Hillingdon Local Plan Part 1: Strategic Policies 7.13, 7.14 and 7.15. Hillingdon UDP (Unitary Development Plan) Saved Policies AM13, AM15, AM16, OL19, LE1 and R16 for the present, serve as Part 2 policies of the Local Plan. This SPD also supplements London Plan (2011) Policies 3.1, 3.5, 3.8, 4.5, 4.12, 7.1 and 7.2.

'Accessible Hillingdon' is a material consideration in determining the outcome of planning applications.

# Legislation and Guidance

**Part M to the Building Regulations**
Building Regulations Approved Document M 2015 sets minimum standards to enable people to easily access new housing and public buildings. The regulations cover public buildings and new dwellings. Part M generally applies to material alterations of, and extensions to, existing buildings. It applies to material changes of use to some non-domestic uses. There is no exception for historic buildings, but Part M contains guidance on such buildings.

**BS 8300: 2009+A1:2010 – Code of Practice**
BS 8300: 2009 provides best practice guidance on the design of buildings and their approaches to meet the needs of disabled people. The standard covers domestic and non-domestic buildings and exceeds the minimum requirements of the Building Regulations.

**British Standard 9999: 2008**
BS 9999:2008 builds on legislation to provide an advanced approach to fire safety in the design, management and use of buildings, with particular reference to means of escape for disabled people. (BS9999 supersedes DD9999, and the entire BS 5588 series (with the exception of BS 5588-1).

**Equality Act 2010**
The Equality Act 2010 gives disabled people particular rights in the areas of education, employment, access to goods, facilities and services, in addition to buying or renting land or property. The Act makes it unlawful for employers and service providers to treat people less favourably on the grounds of their disability. To allow access by disabled people, a legal duty may require the removal of a physical barrier, or modification of a building and/or an adjustment to how a service is delivered.

**Special Education Needs**
The Equality Act places a duty on Local Education Authorities and on schools not to discriminate against, harass or victimise disabled children. All early years providers must make reasonable adjustments to prevent disabled children from being placed at a substantial disadvantage, which includes accessibility to and within buildings, as well as the provision of auxiliary aids and services.
This duty is anticipatory, and all publicly funded early years providers must promote equality of opportunity for disabled children. Further details on the disability discrimination duties can be found in Chapter 1 of the Equality Act 2010.

**The Planning and Compulsory Purchase Act 2004**
The Act modified procedures in development planning and control to include a number of provisions related to Access Statements.

**Accessible London: Achieving an Inclusive Environment, GLA (October 2014)**
The GLA's Supplementary Planning Guidance 'Accessible London' provides detailed information on implementing relevant London Plan policies.

## Regional Planning Policy

**The London Plan 2016**
A key objective of the London Plan 2016 is to build a London that achieves the highest standards of safe, easy and inclusive access for all people, regardless of disability, age or gender. The plan includes policy requirements for accessible housing.

**National Planning Policy Framework (NPPF)**
The NPPF sets out the Government's planning policies for England, which includes a framework on how local and neighbourhood plans are expected to apply inclusive design.

## Residential Development

In line with London Plan Policy 3.8, Hillingdon Council has adopted the Housing - Optional Technical Standards.

- ninety percent of new dwellings should meet M4(2) for an accessible and adaptable home as set out in Approved Document M to the Building Regulations (AD M)

- ten percent of new homes should meet the requirements of an M4(3) wheelchair adaptable or accessible dwelling as prescribed in AD M

Full details of a proposed development, including its external design features, should be submitted with a planning application. Floor plans should include detailed furniture plan layouts, the requisite room dimensions, and critical measurements between items of furniture in rooms.

All new residential developments must also:

- adhere to GLA minimum floor space standards (refer to London Plan Policy 3.5 and Mayor of London's 'Housing' Supplementary Planning Guidance, March 2016)

**NB:** These standards are applicable to all new housing in the private and affordable housing sectors.

# Accessible and Adaptable Dwellings M4(2)

To ensure that residential accommodation offers standards of accessibility that can be relied upon, and to ensure that homes are adaptable without the need for post-construction alterations, the Council requires that all new homes are designed to the standards set out in Approved Document M to the Building Regulations M4(2).

**Accessible Parking**
The principle is to provide parking (or enable simple and cost-effective adaptation) that facilitates easy access in and out of a vehicle for older and disabled people and those with children.

- where provided for the dwelling, a drop off point should be no less than 1000 mm wide, feature a gradient not exceeding 1:12, and be flush with the adjoining ground

- for blocks of flats or other communal parking, a minimum of one standard parking space is provided close to the communal entrance of each core of the block (or close to the lift where parking is internal)

**NB:** The Council will require a Parking Management Plan for developments comprising ten units or more.

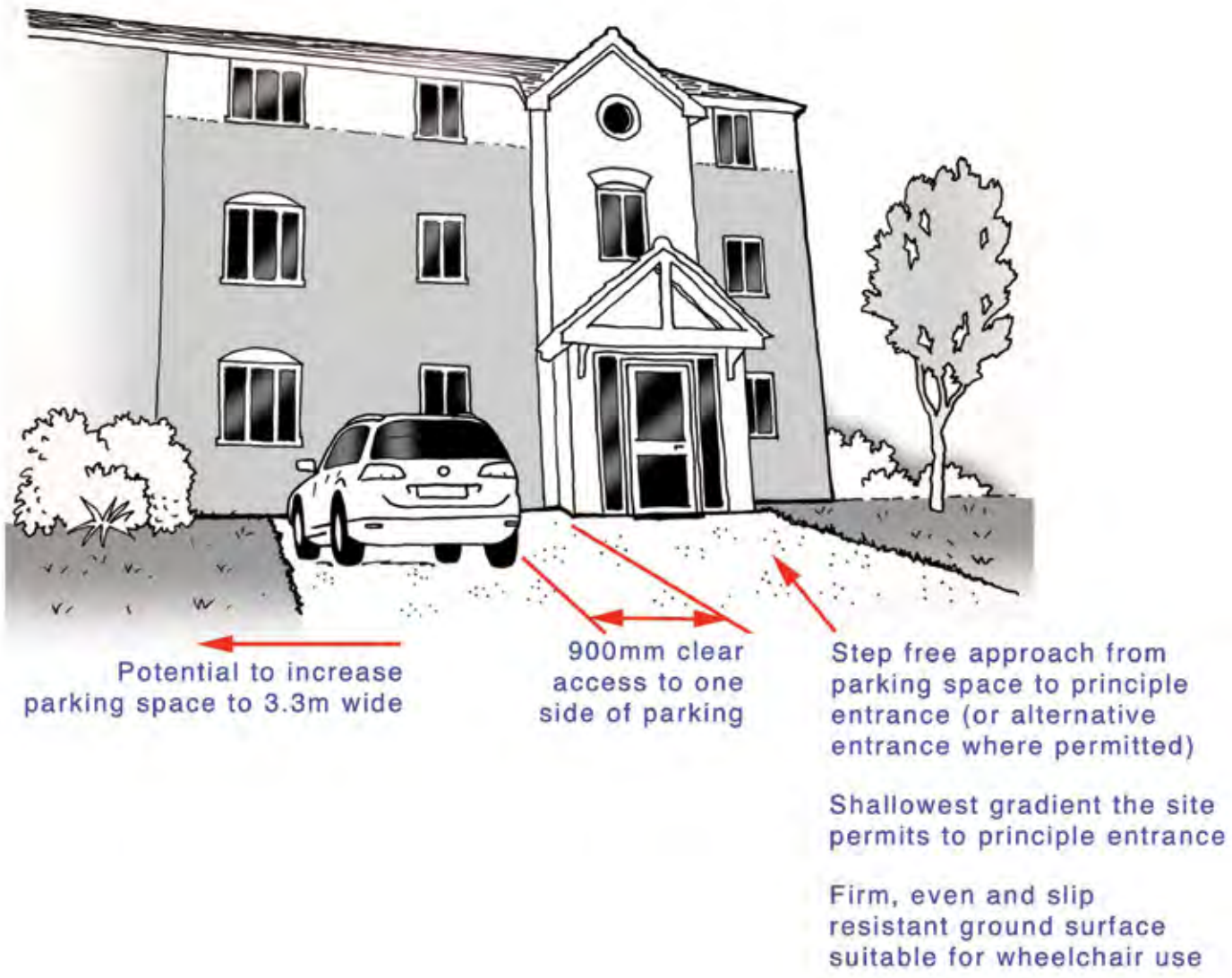

## Approach to the Dwelling

The approach route to a home should be safe and convenient and feature the shallowest grade possible to achieve a step free route, irrespective of the storey on which the dwelling is located.

**NB:** The same design principles should apply from any visitor parking.

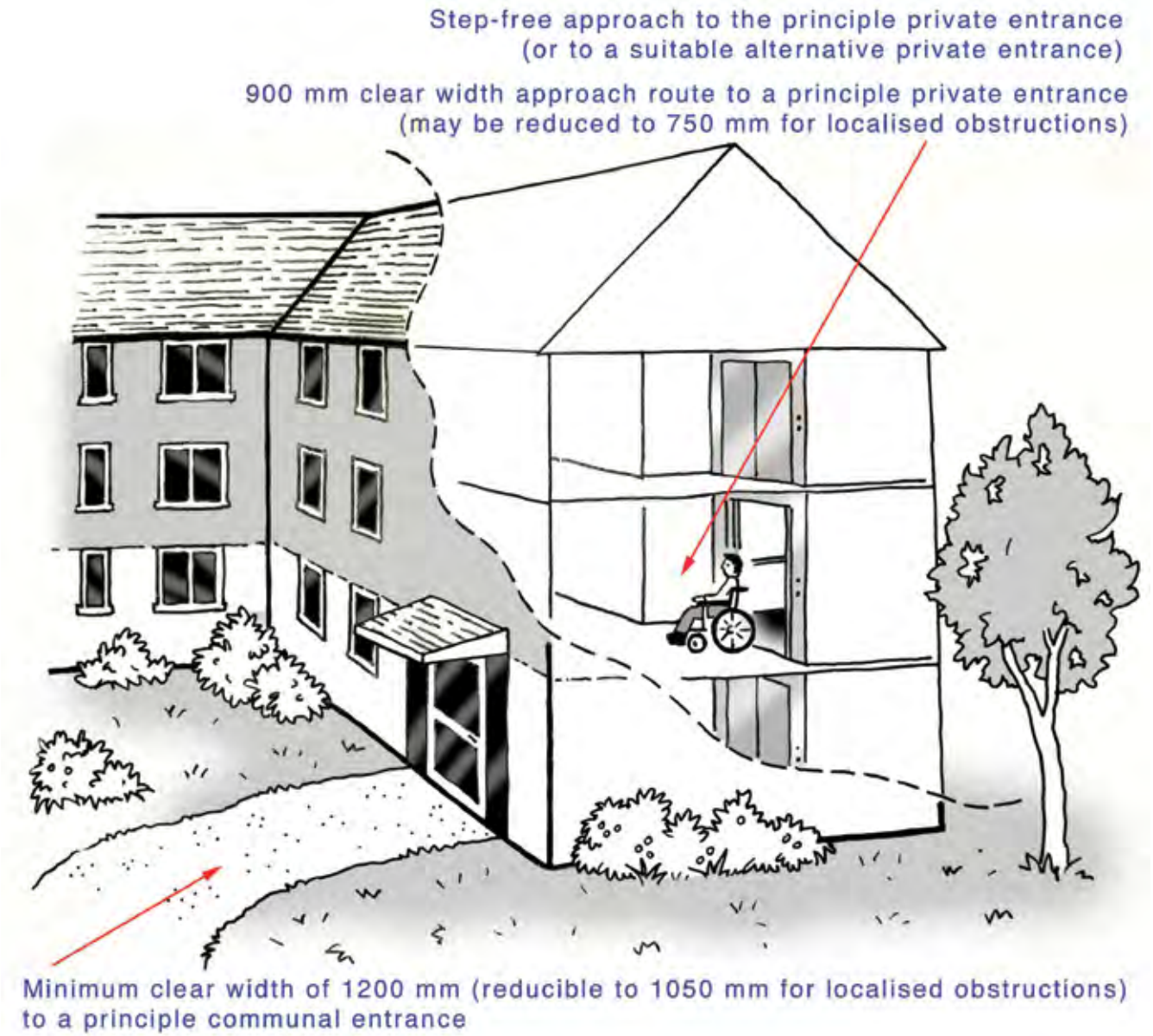

## Ramps

Avoid the use of ramps to achieve a step-free route. However, where unavoidable, ramps should comply with these specifications:

**NB:** Localised obstructions should not occur opposite or close to a doorway, or at a junction point that requires a change in direction. A localised obstruction should not continue for more than 2 metres in length.

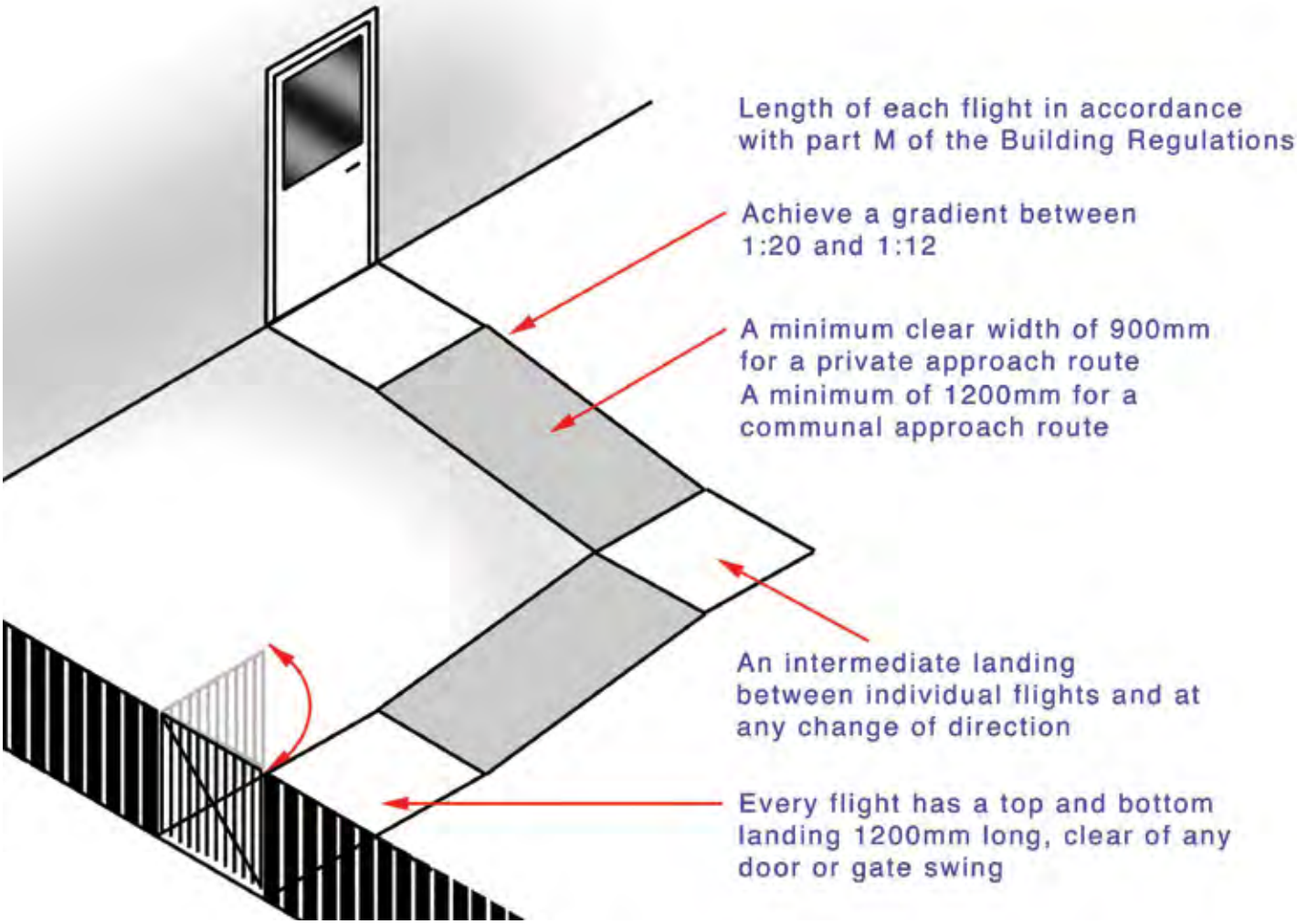


## Steps

External steps where unavoidable should:

- be provided in addition to a ramped approach where the route rises 300mm or more (refer to Approved Document M to the Building Regulations for detailed specifications)
- have a uniform rise of between 150mm and 170mm, with a going of between 280mm and 425mm. (For tapered steps, measure at a point 270mm from the 'inside' (narrow end) of the step)
- ensure every flight of stairs achieves a minimum clear width of 900 mm, rises no more than 1800mm, and features a top and bottom landing not less than 900mm long
- feature a suitable handrail on one side, or on both sides where the flight is wider than 1000mm, and where three or more steps are necessary

# Communal Entrances

Every communal door or gate along the approach route should:

- be lit at night on the external side using diffused luminaries activated automatically by dusk to dawn sensors and/or motion detectors

- ensure door entry systems and controls, where provided, are mounted 900mm to 1000mm above the finished ground level, and, at least 300 mm away from any projecting corner

- have a minimum clear opening width of 850mm (refer to approved Doc M to the Building Regulations).
  For double doors, a minimum of one door leaf to achieve a clear opening width of 850mm

- feature an accessible threshold/water bar not exceeding 15mm in height

- ensure a minimum of 1500 mm between lobby door swings

- provide ground and floor surfaces that allow the free-wheeling movement of wheelchair users

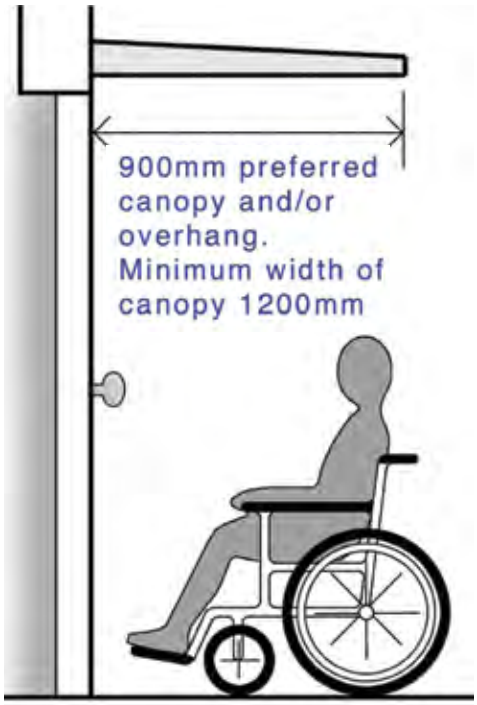


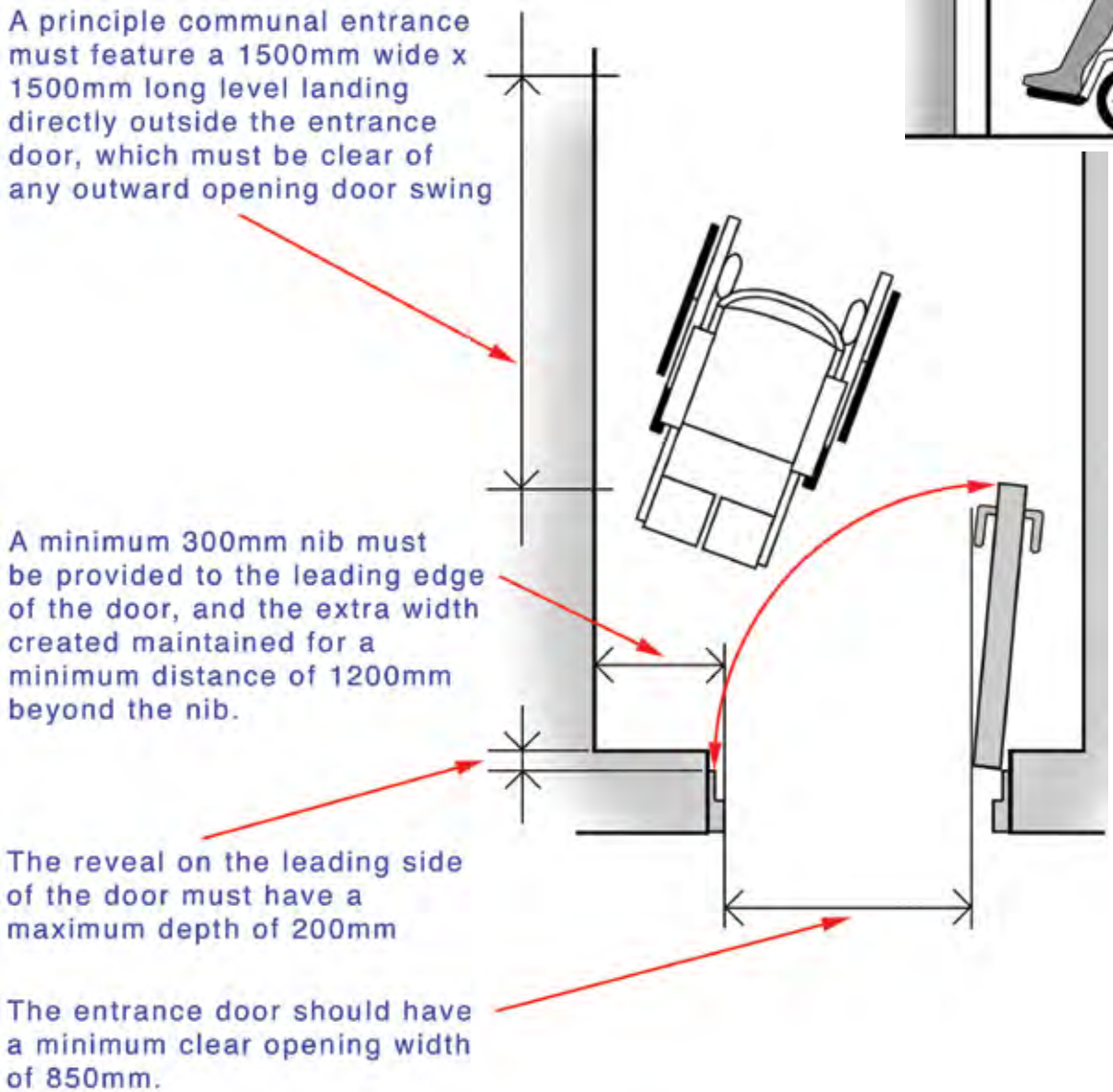

# Communal Lifts

Everyone, including accompanied wheelchair users, should be able to access and use the lift. Every passenger lift that gives access to a dwelling should be designed to meet the requirements of BS EN 81-70:2003, or equivalent, for a type 2 lift.

**NB:** The lift doors once fully opened should have a dwell time of 5 seconds before they begin to close.

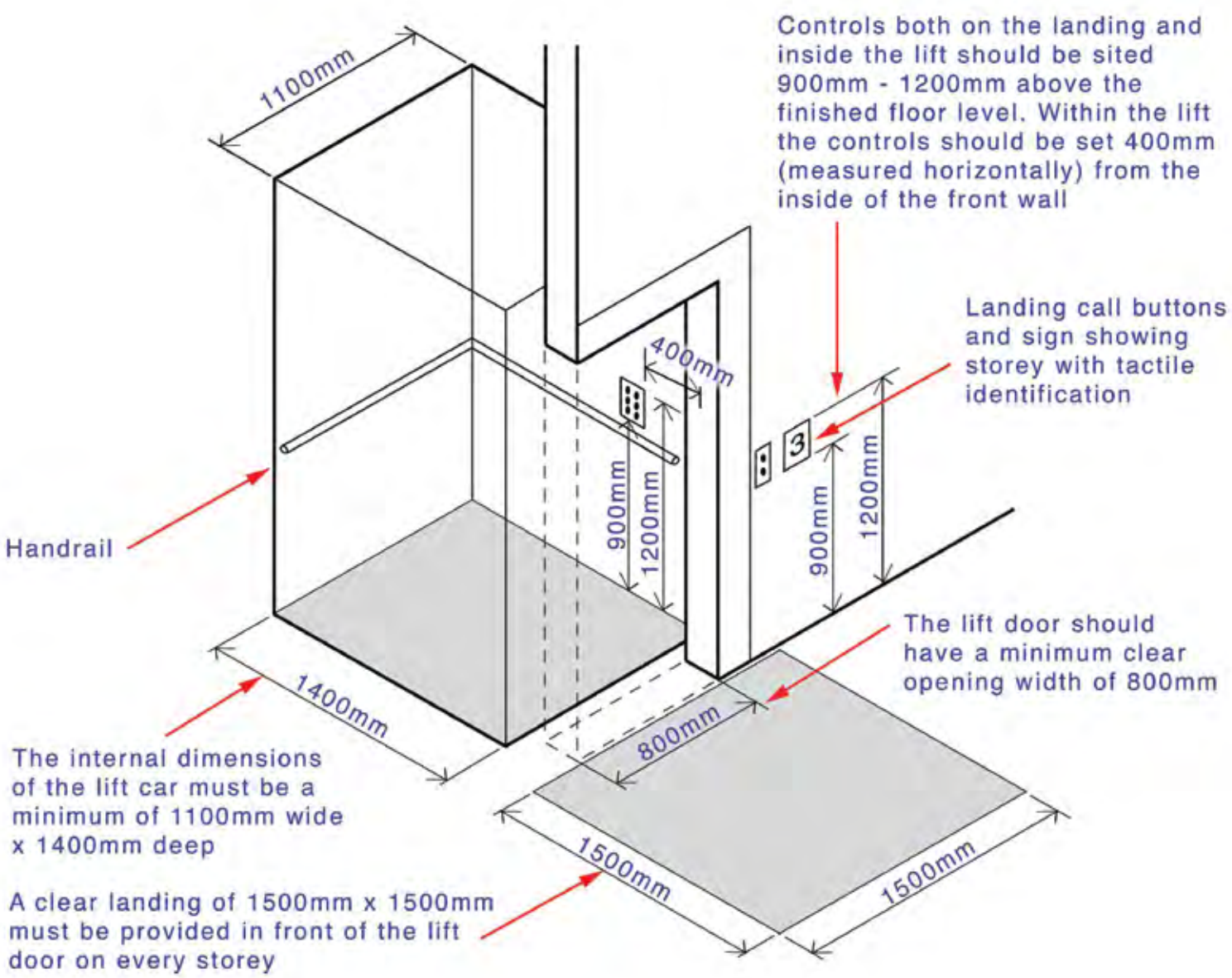

# Stairs

Stairs that give access to a dwelling should meet the requirements of Approved Document K to the Building Regulations.

**Stairs within a dwelling**
Open risers are permissible provided

- treads overlap by no less 16mm
- they are constructed such that a 100mm diameter sphere cannot pass through the open risers

**Stairs for common areas (e.g. within a flatted development) should:**

- **not** have open risers
- have tread nosings that contrast visually with the tread and riser, 50 to 65mm on the tread, and, 30 to 55mm on the riser
- have a tread nosing profile as prescribed in Approved Document K to the Building Regulations

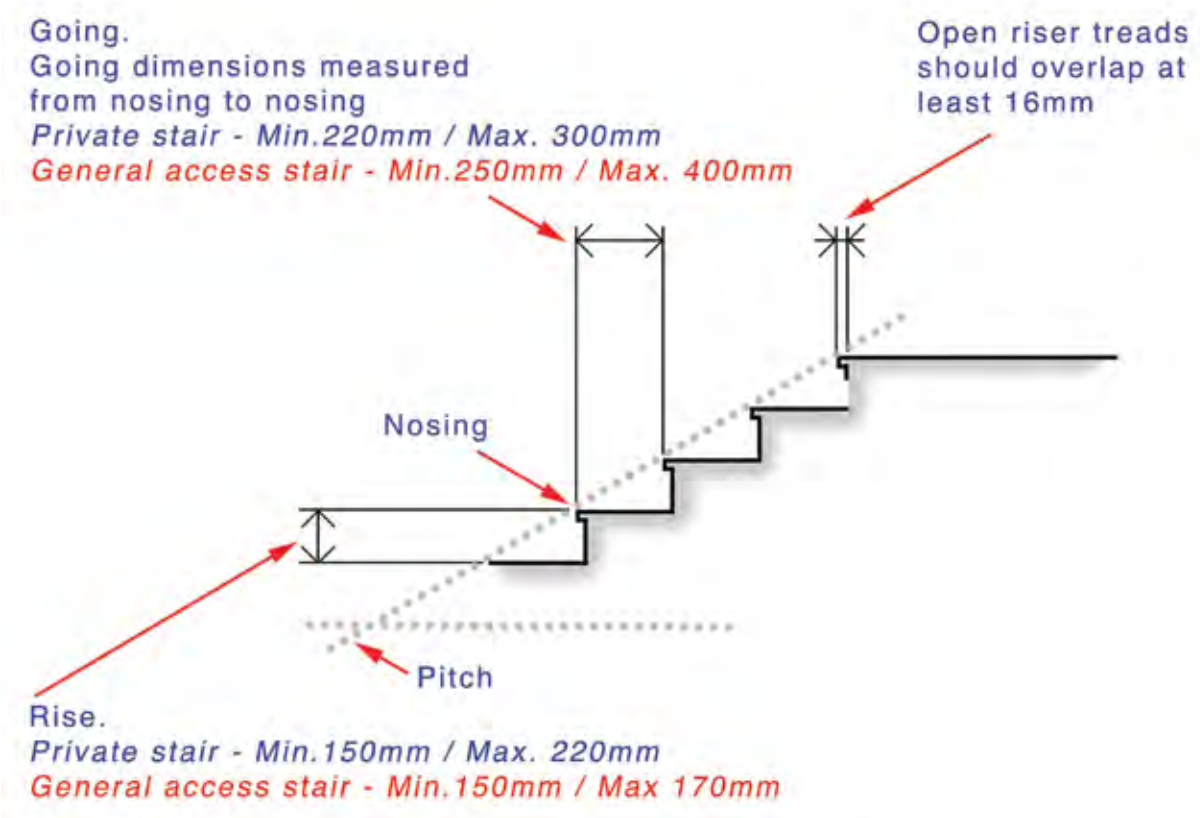

# Private Entrances

All entrances to a private dwelling, including to and from a private garden, balcony, terrace, garage, carport, conservatory, or storage area that is integral or connected to the dwelling, should meet these minimum specifications:

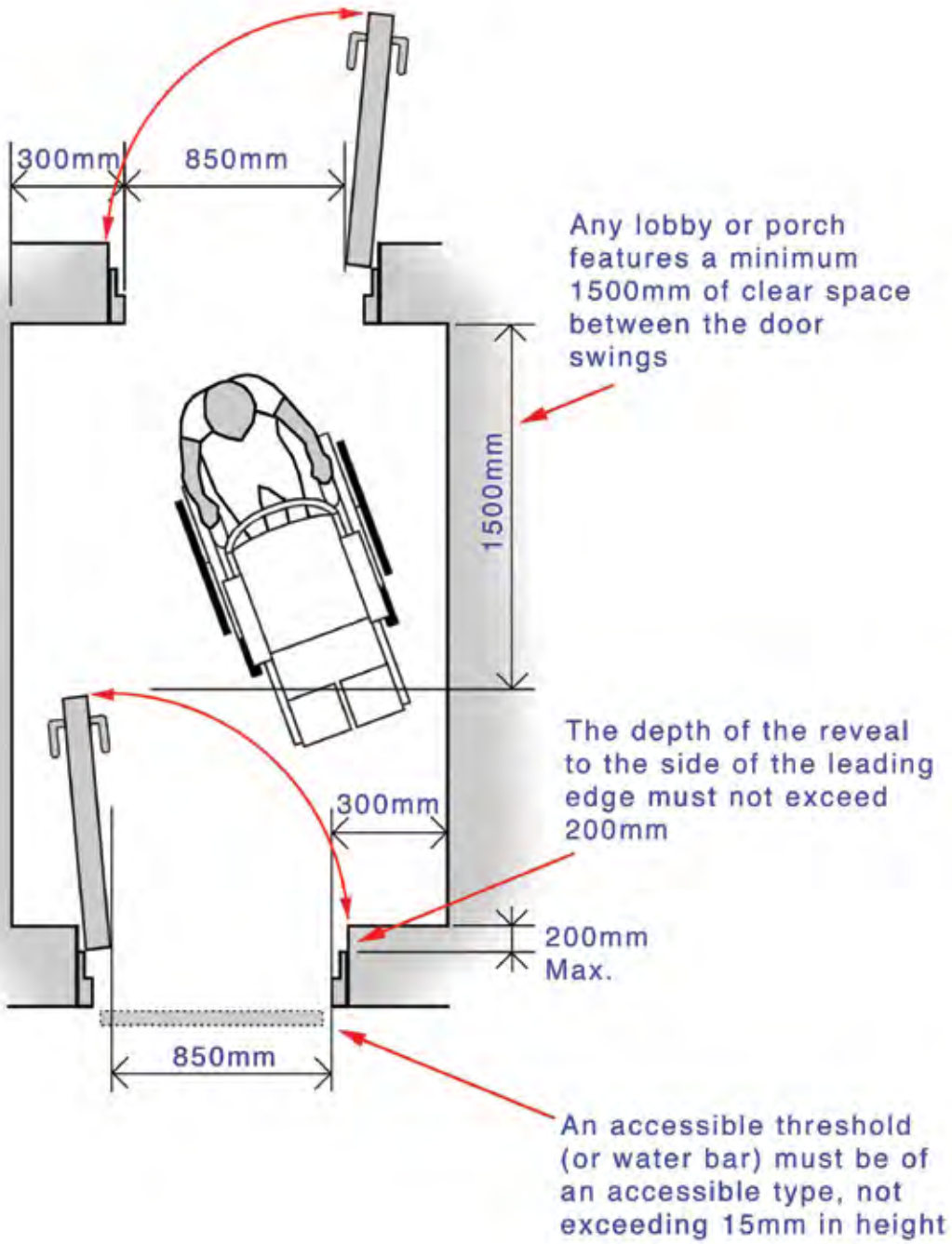

# Internal Circulation Areas and Doorways

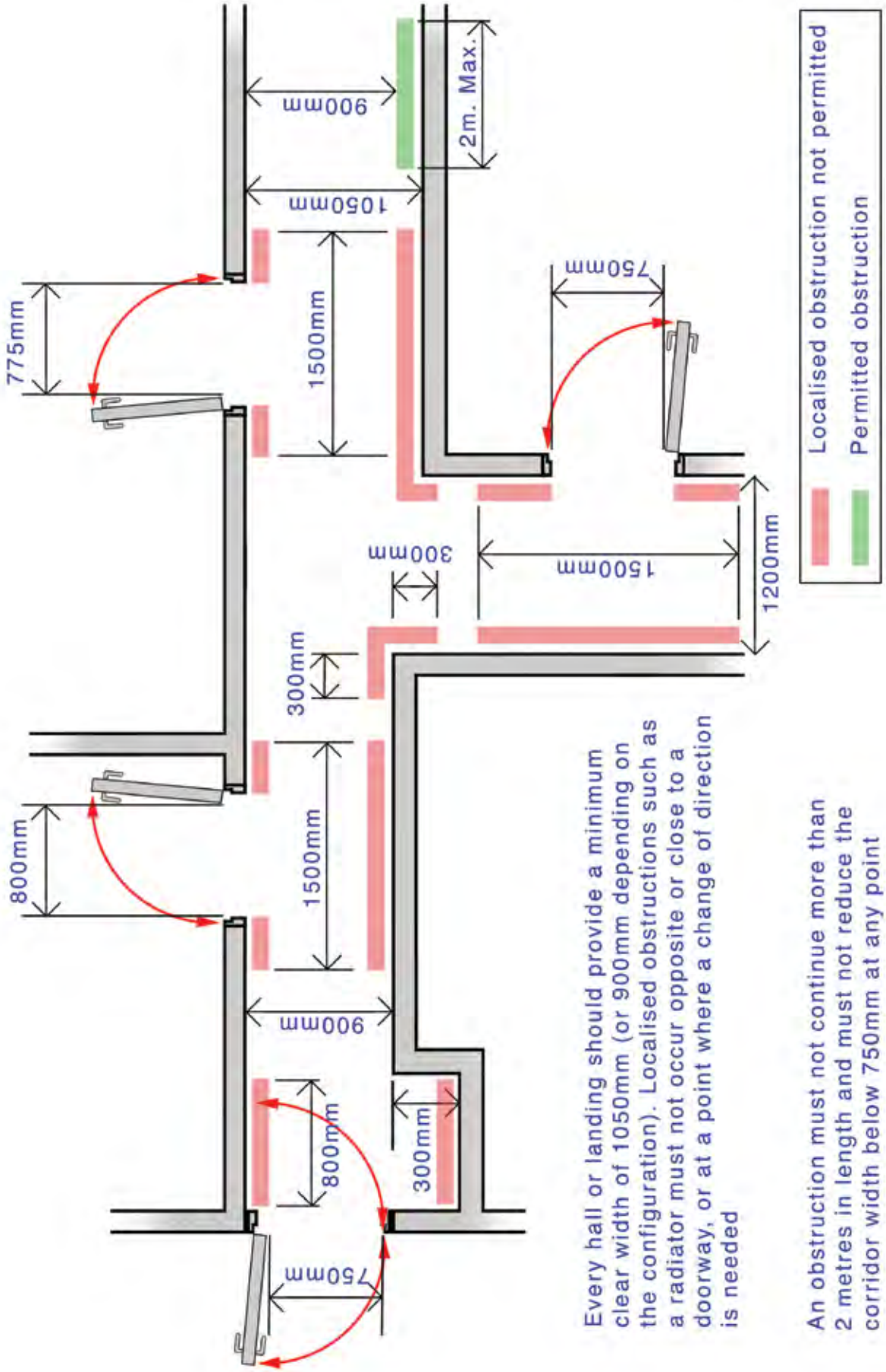


Every hall or landing should provide a minimum clear width of 1050mm (or 900mm depending on the configuration). Localised obstructions such as a radiator must not occur opposite or close to a doorway, or at a point where a change of direction is needed

An obstruction must not continue more than 2 metres in length and must not reduce the corridor width below 750mm at any point

## Door width and leading-edge

| Doorway clear opening width (mm) | Corridor clear passageway width (mm) |
|---|---|
| 750 or wider | 900 (when approached head on) |
| 750 | 1200 (when approach is not head on) |
| 775 | 1050 (when approach is not head on) |
| 800 | 900 (when approach is not head on) |

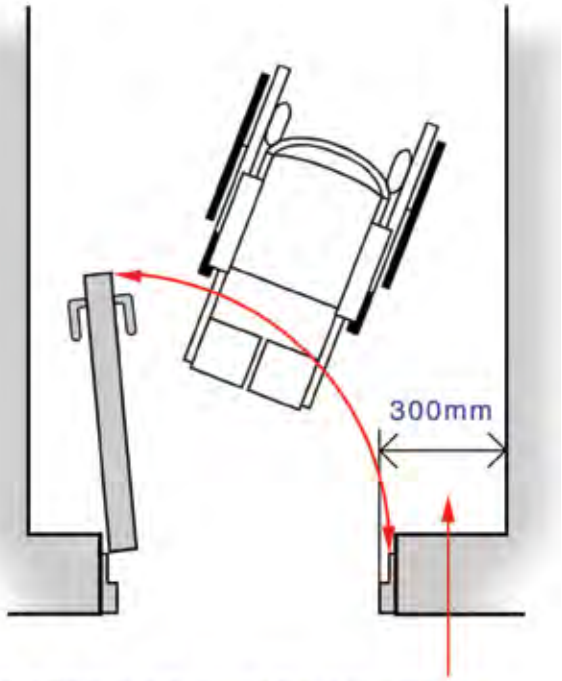


A 300mm nib must be provided to the leading edge of every door on the ground floor

## Private Stairs and Level Changes Within a Home

Step free access is to be achieved to all rooms and facilities on the entrance storey. Level changes should be avoided on all other floors.

To continue the provision of possible step free access from the entrance level to a storey above or below (where a main bedroom and bathroom is located), private stairs should be designed to accommodate future stair-lift installation.

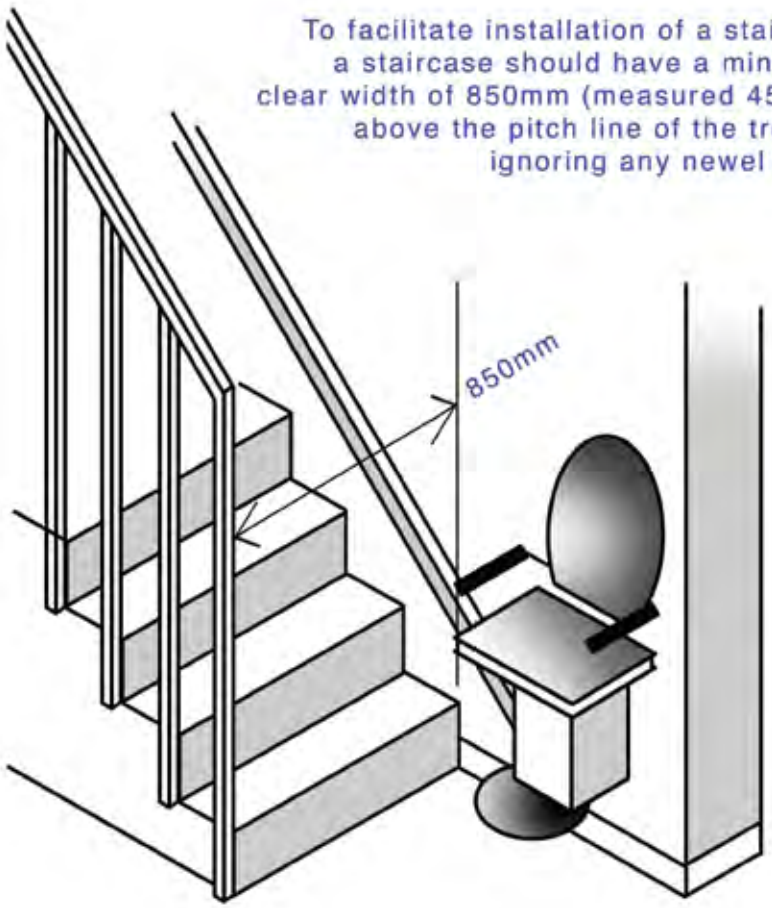


To facilitate installation of a stair lift, a staircase should have a minimum clear width of 850mm (measured 450mm above the pitch line of the treads, ignoring any newel post)

## Living, Kitchen and Eating Areas

All new homes should provide accessible, convenient and comfortable living spaces.

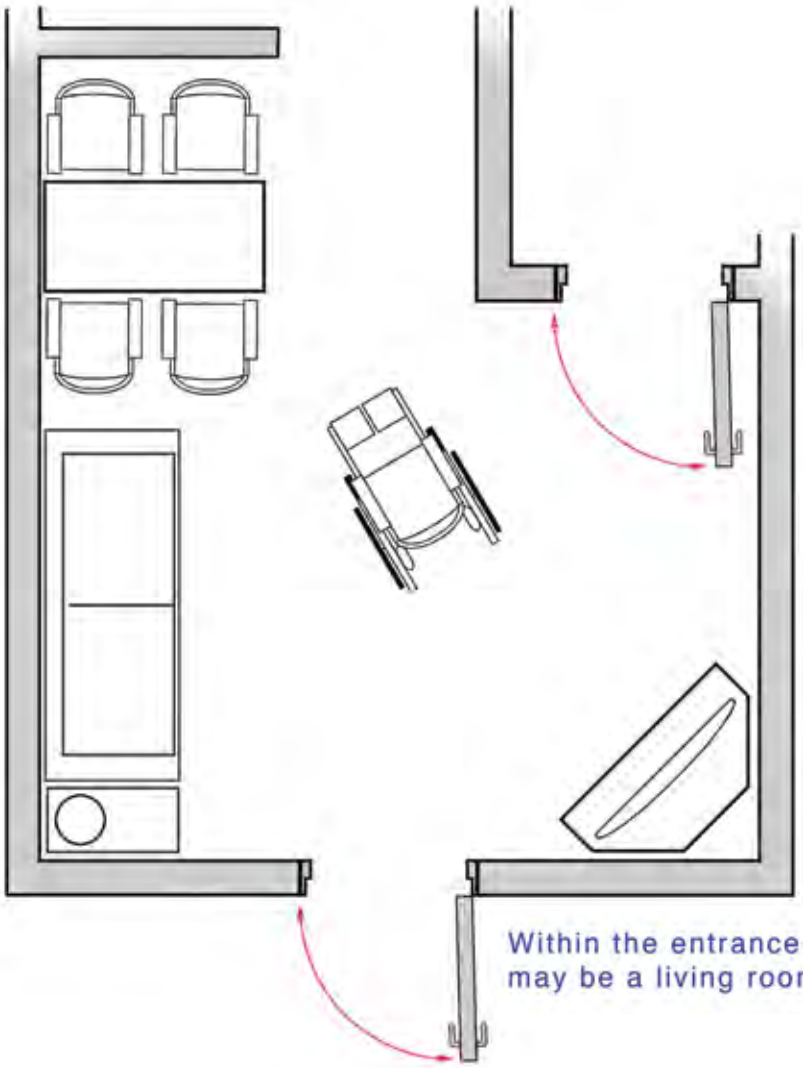

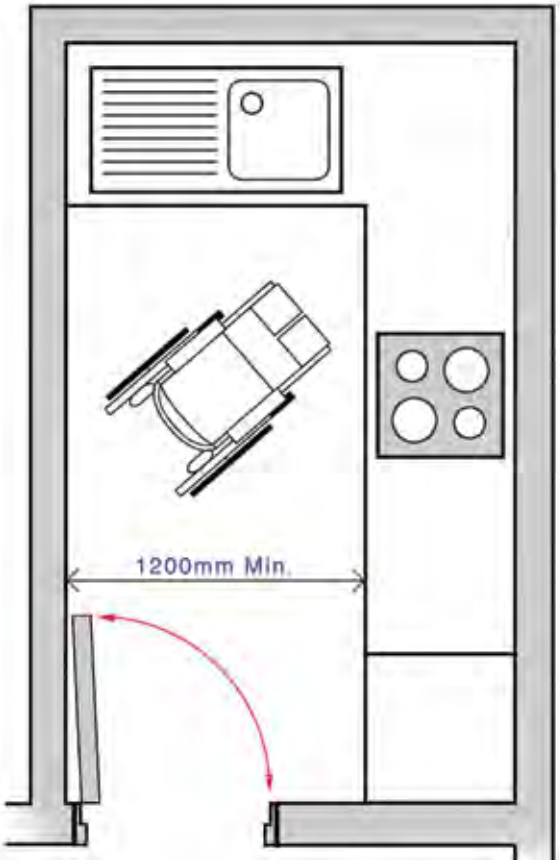


1200mm of clear space should be provided in front of and between all kitchen units and appliances

Within the entrance storey there must be a living area which may be a living room, kitchen/diner, or a combination

## Living Area Glazing

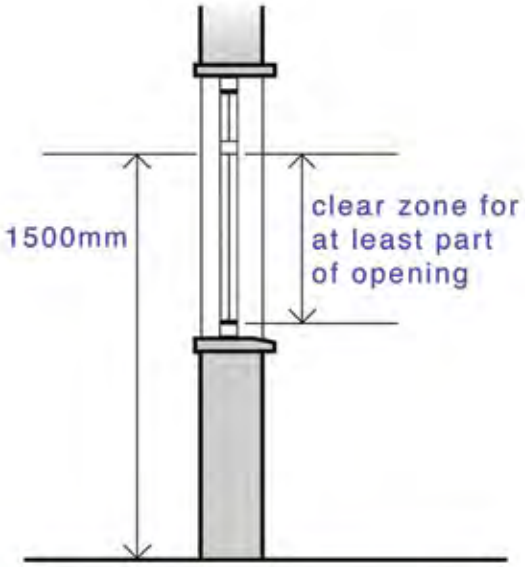


Glazing should start at a maximum of 850mm above finished floor level (or at a minimum height necessary to satisfy Part K requirements for guarding to windows)

# Bedrooms

To facilitate accessibility into bedrooms for a wide range of people, including wheelchair users, the design of at least one principal bedroom should meet these minimum specifications:

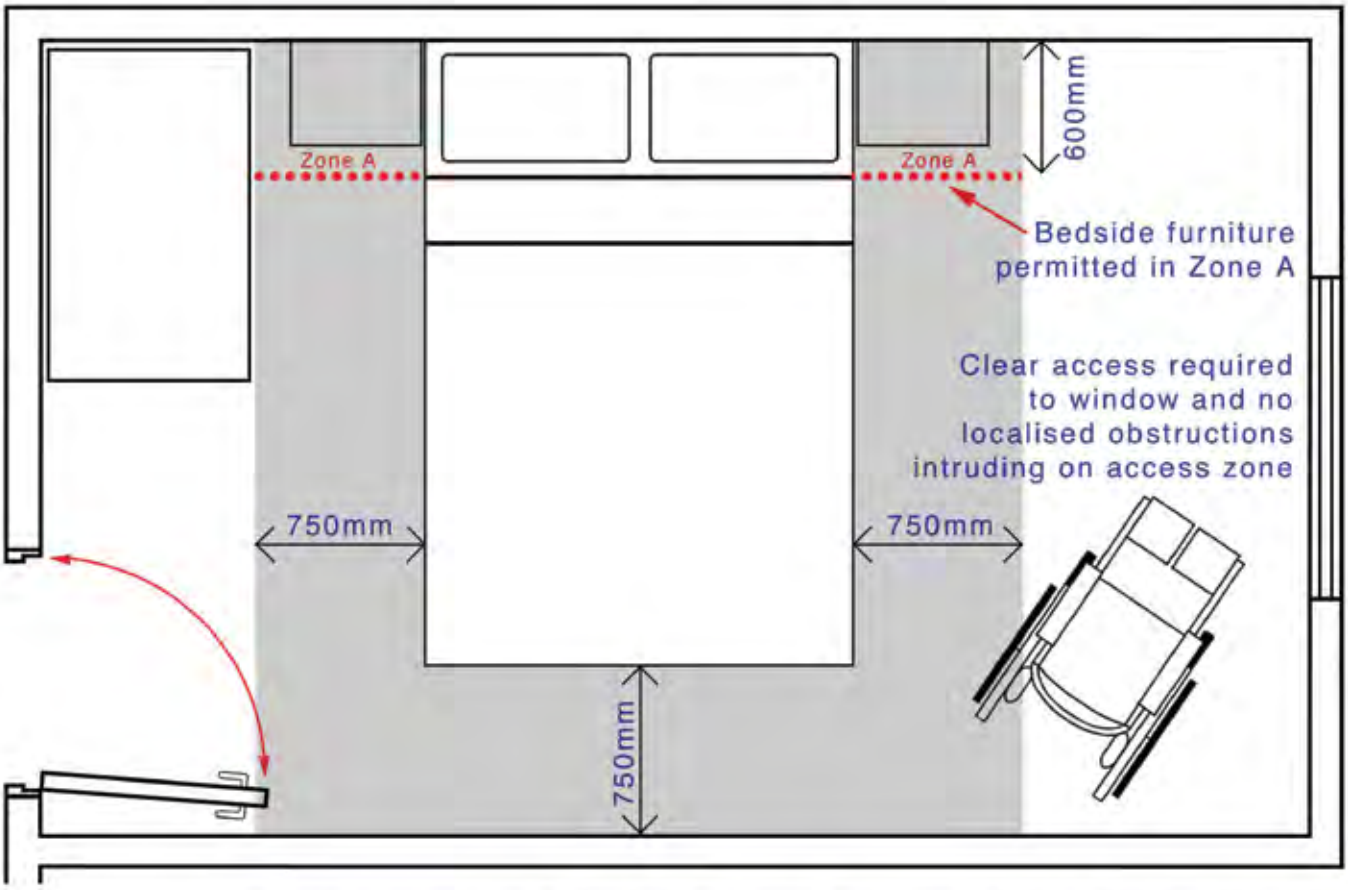


All other double and single bedrooms must provide a clear access zone of 750mm wide on at least one side and at the foot of the bed

## Entrance Level WC/ Cloakrooms

Step free access must be achieved between a living area, and a WC/cloakroom. Located on the entrance storey and suitable for use by some wheelchair users, the facility may be a WC/cloakroom or a bathroom.

To ensure compliance, all 2/3 storey dwellings with 1 or 2 bedrooms must:

- be on the entrance storey
- feature an outward opening door
- provide a toilet pan, handbasin
- ensure that the handbasin does not impede the ability of a wheelchair user to access the WC 2 or 3 storey dwellings with 3 bedrooms or more must
- ensure that the entrance level WC/ cloakroom or bathroom provides an installed level access shower (or is readily equipped for level access shower installation)

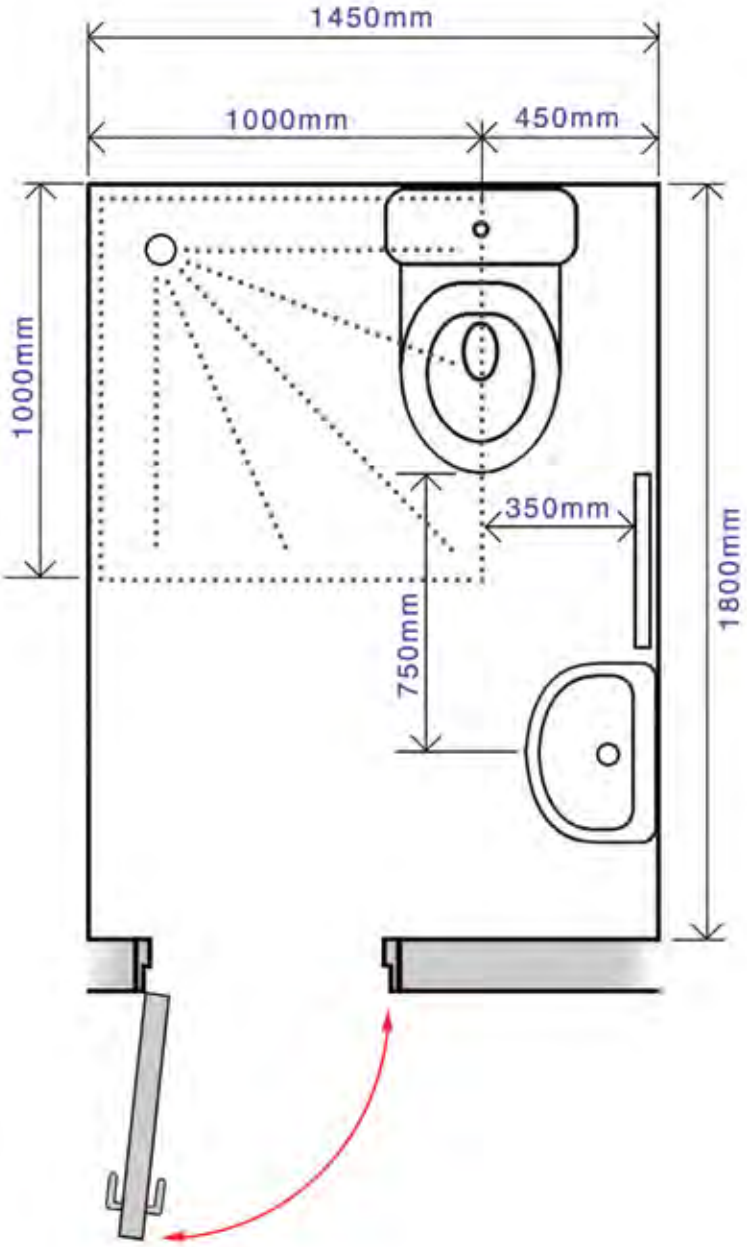


## Bathrooms

Convenient access to a suitable bathroom must be achieved within all dwellings. Every new dwelling is to incorporate a bathroom that:

- is located on the same floor as the principle double bedroom
- contains a toilet pan, a handbasin and a bathtub
- achieves the requisite clear access zones (wheelchair user transfer and manoeuvring space) between bathroom furniture items

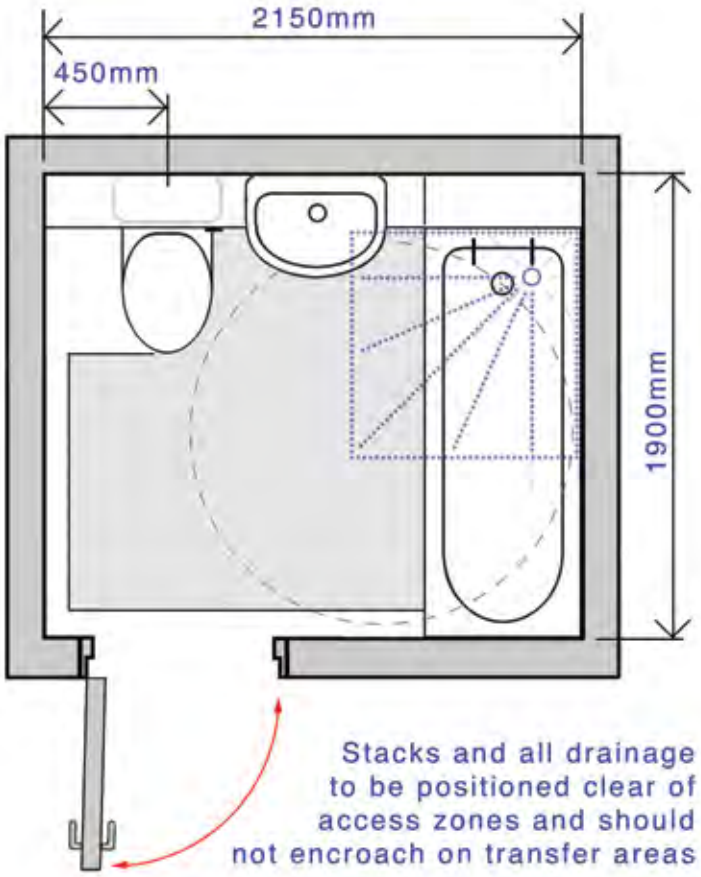

# Services and Controls

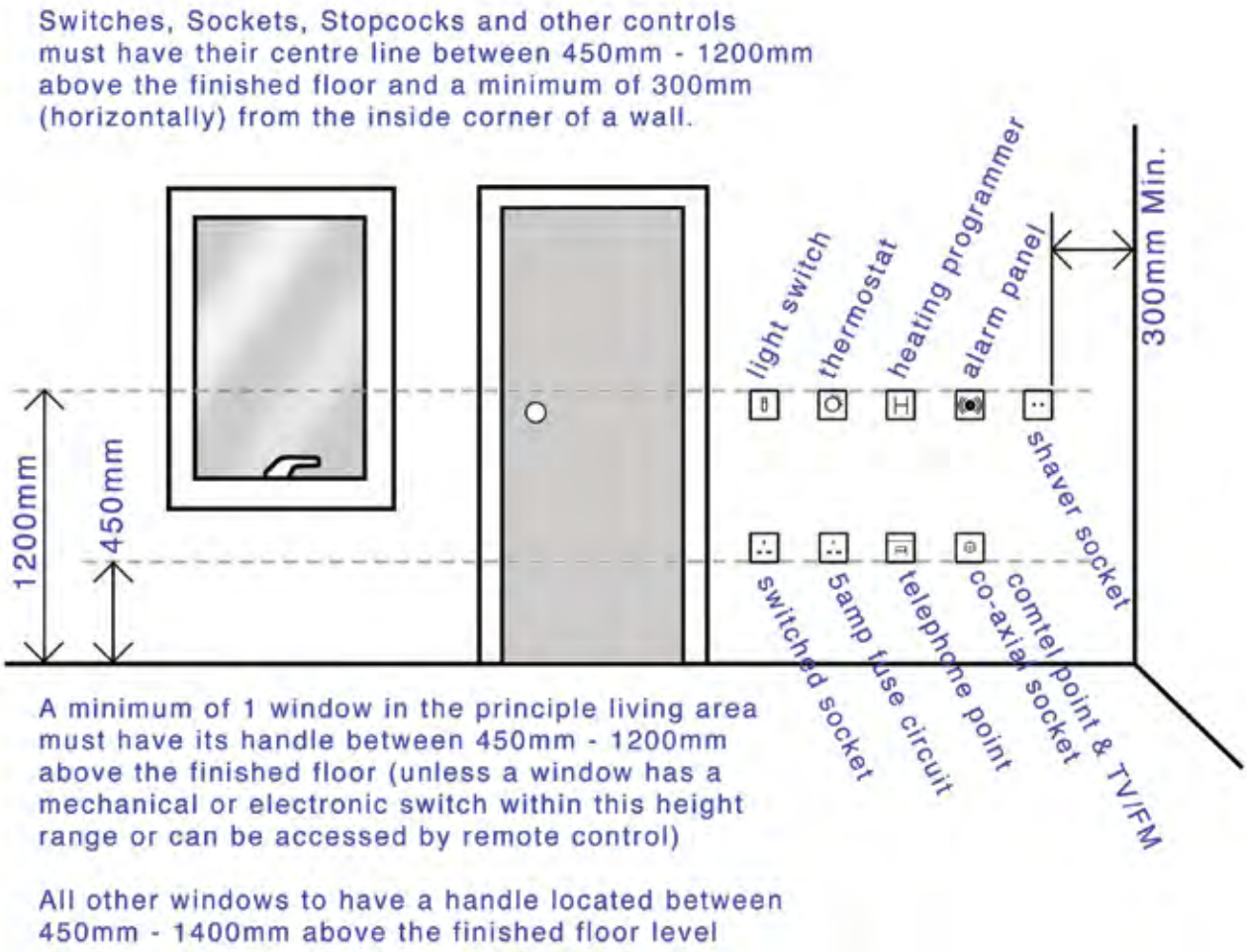


**NB:** The consumer unit (fuse board) should be mounted 1350mm to 1450mm above the furnished floor level

# Wheelchair Accessible and Wheelchair Adaptable Dwellings M4(3)

A wheelchair adaptable dwelling is one which is designed and built for potential occupation by a wheelchair user (possibly after minor, non-structural, alterations).

A wheelchair accessible home, however, is constructed and fitted to a standard suitable for 'day one' occupation by a wheelchair user, without the need for alterations.

The Council requires 10% of all new housing to be designed to meet the standards prescribed in Approved Document M to the Building Regulations for an M4(3) home.

Dwellings for sale on the open market should meet the minimum standards required for a wheelchair adaptable home, with all Affordable Housing dwellings constructed to a wheelchair accessible standard.

Planning applications should demonstrate how a development proposal for a new dwelling(s) satisfies the functional and spatial provisions for wheelchair adaptable and/or wheelchair accessible housing.

Floor plans submitted as part of a planning application should be at a scale of at least 1:100. Plans should include furnished planned layouts, and clearly demonstrate the access zones and other provisions as set out in Approved Document M to the Building Regulations.

## Approach to the home

The approach route to a **wheelchair accessible** or **wheelchair adaptable** home should be level or achieve the shallowest gradient that can reasonably be achieved. The route should be safe and convenient for everyone, but above all, it must be step free, irrespective of the storey on which the dwelling is located.

The approach route to all private entrances must:

- be level or otherwise step free, including the approach route to any dedicated storage for mobility scooters
- where a communal ramped approach is required and the overall rise is 300mm or more, the route must feature an additional / stepped route
- have a minimum clear width of 1200mm (applies to private and communal approach routes)
- NOT feature a localised obstruction opposite or close to a doorway, or where a change of direction may be necessary. Any necessary obstruction must not continue more than 2 metres in length
- provide a level turning or passing place 1500mm wide and deep at each end of the approach route, and at intervals not exceeding 10 metres (refer to AD M)
- have a suitable ground surface that is firm, even and slip resistant
- have lighting throughout the exit areas that is fully diffused and activated automatically by a dusk to dawn switch or motion sensors
- ensure every gate, gateway and doorway, including the main communal or private entrance, achieves a clear opening width of 850mm
- feature doors with a clear opening width of 850mm, a minimum 300mm nib to the leading edge, and a minimum 200mm nib to the following edge

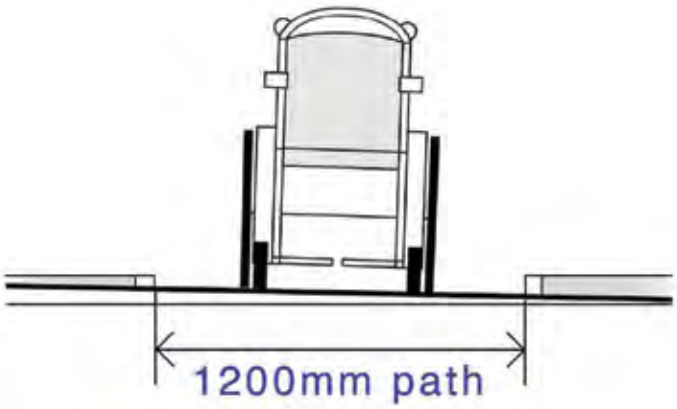


Max. 1 in 60 crossfall

External and internal ramps (where necessary) should achieve a gradient of between 1:20 and 1:15

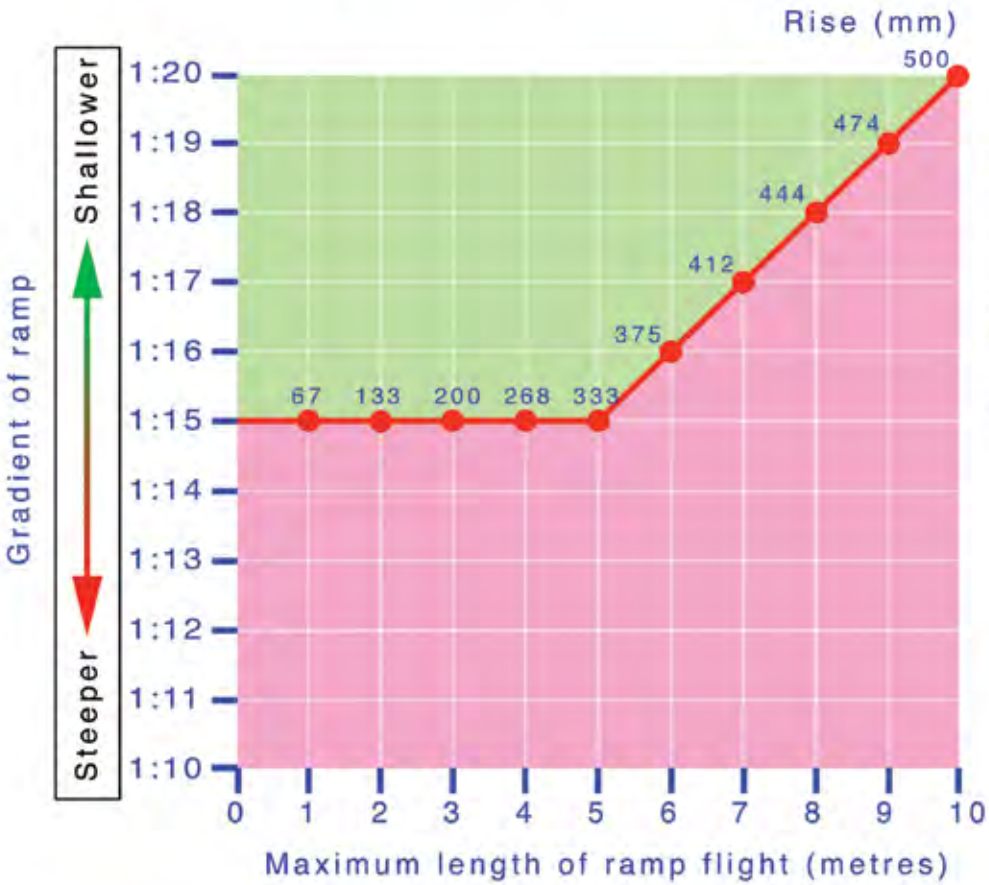


Notes:

1) Gradient x length of flight = rise eg. 1:20 x 10 = 500mm.

2) A site gradient of 1:15 will usually require a series of ramps of 1:12 interspersed with landings where necessary.

Does not comply

Satisfactory

- Ramp flight to have a minimum clear width of 1200mm with a level landing at the top and bottom of every flight.
- Should have an intermediate landing between individual flights and at any change of direction. The landing should be level and minimum 1200mm wide and must be clear of any door or gate swing.

# External Steps Forming Part of an Additional Route

Any external steps required to form an additional access route should:

- not rise more than 1800mm between landings
- adhere to these specifications

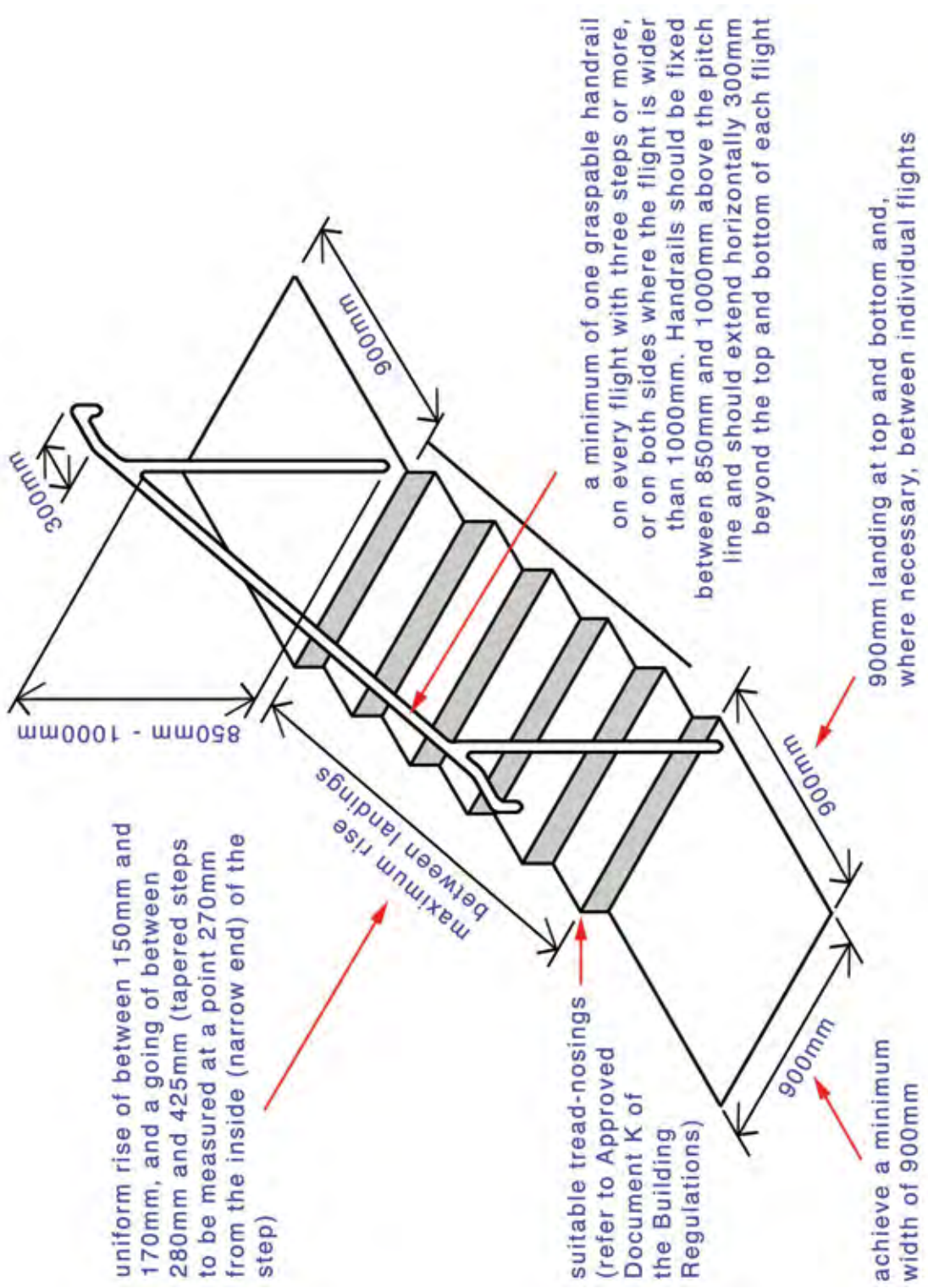

## Accessible Car Parking

To facilitate a wheelchair user getting in and out of a car from either side, and to allow designated access to the boot space, accessible parking spaces should be designed accordingly.

**NB:** It is acceptable for two adjacent accessible parking bays to share a side access zone.

## Drop Off Point

Where a drop off point is provided it should:

- be located close to the principle communal entrance of the building containing the dwelling
- be on level ground that is firm, even and slip resistant
- ensure that any necessary dropped kerb is a minimum of 1000 mm wide, is reasonably flush with the adjoining ground and achieves a maximum gradient 1:15

# Principle Communal Entrance

Every communal door or gate along the approach route should adhere to these specifications.

**NB:** Ensure that a power assisted opening device is installed where the opening force of the door exceeds 20 newtons. Ground  and floor surfaces should not impede the movement of wheelchair users.

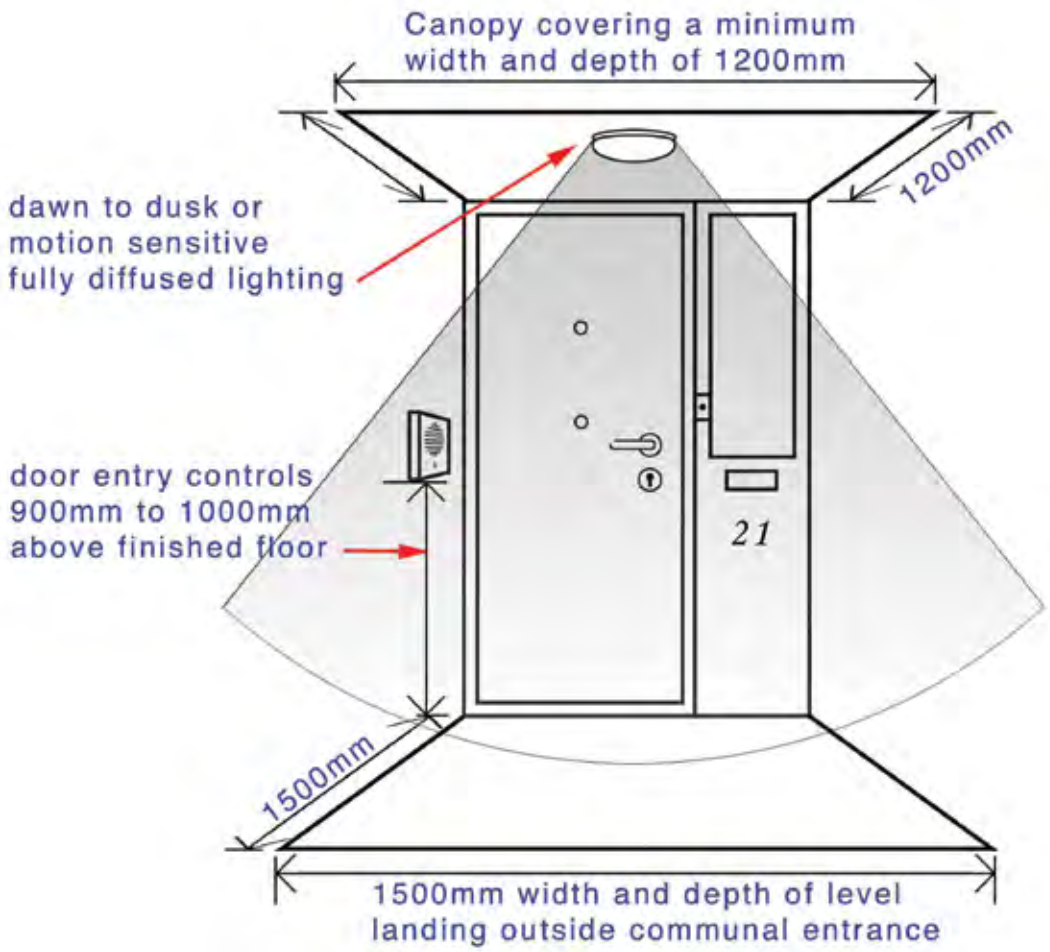

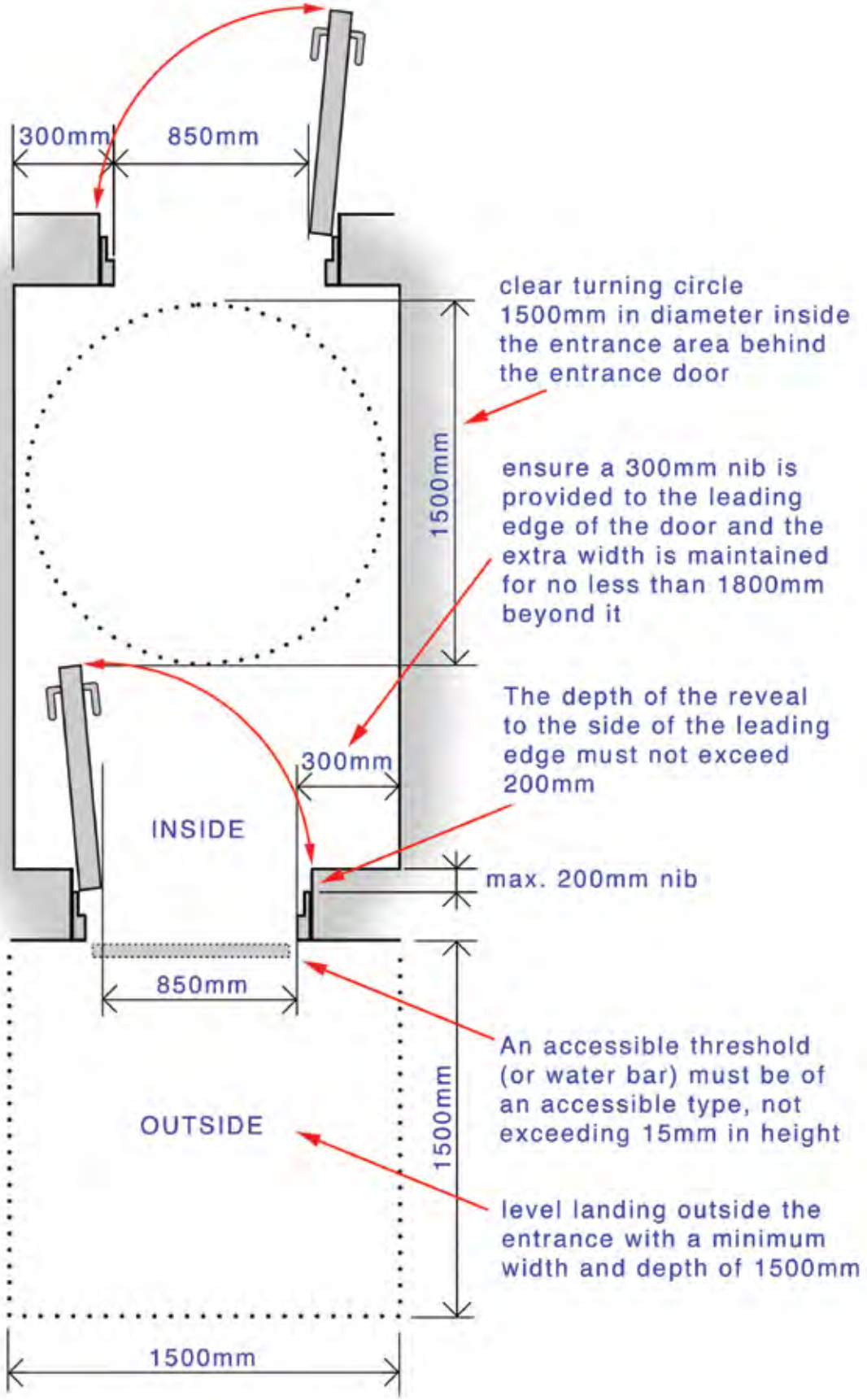
300mm
850mm
clear turning circle 1500mm in diameter inside the entrance area behind the entrance door
1500mm
ensure a 300mm nib is provided to the leading edge of the door and the extra width is maintained for no less than 1800mm beyond it
The depth of the reveal to the side of the leading edge must not exceed 200mm
300mm
INSIDE
max. 200mm nib
850mm
An accessible threshold (or water bar) must be of an accessible type, not exceeding 15mm in height
1500mm
OUTSIDE
level landing outside the entrance with a minimum width and depth of 1500mm
1500mm

# Communal Lifts

To achieve a step free route to all dwellings, including accessibility for accompanied wheelchair users, a passenger lift is required in all multi-storey buildings.

**NB:**

- a minimum delay of 5 seconds is required before the doors begin to close

- lifts should meet BS EN 81-70:2003 for a Type 2 lift

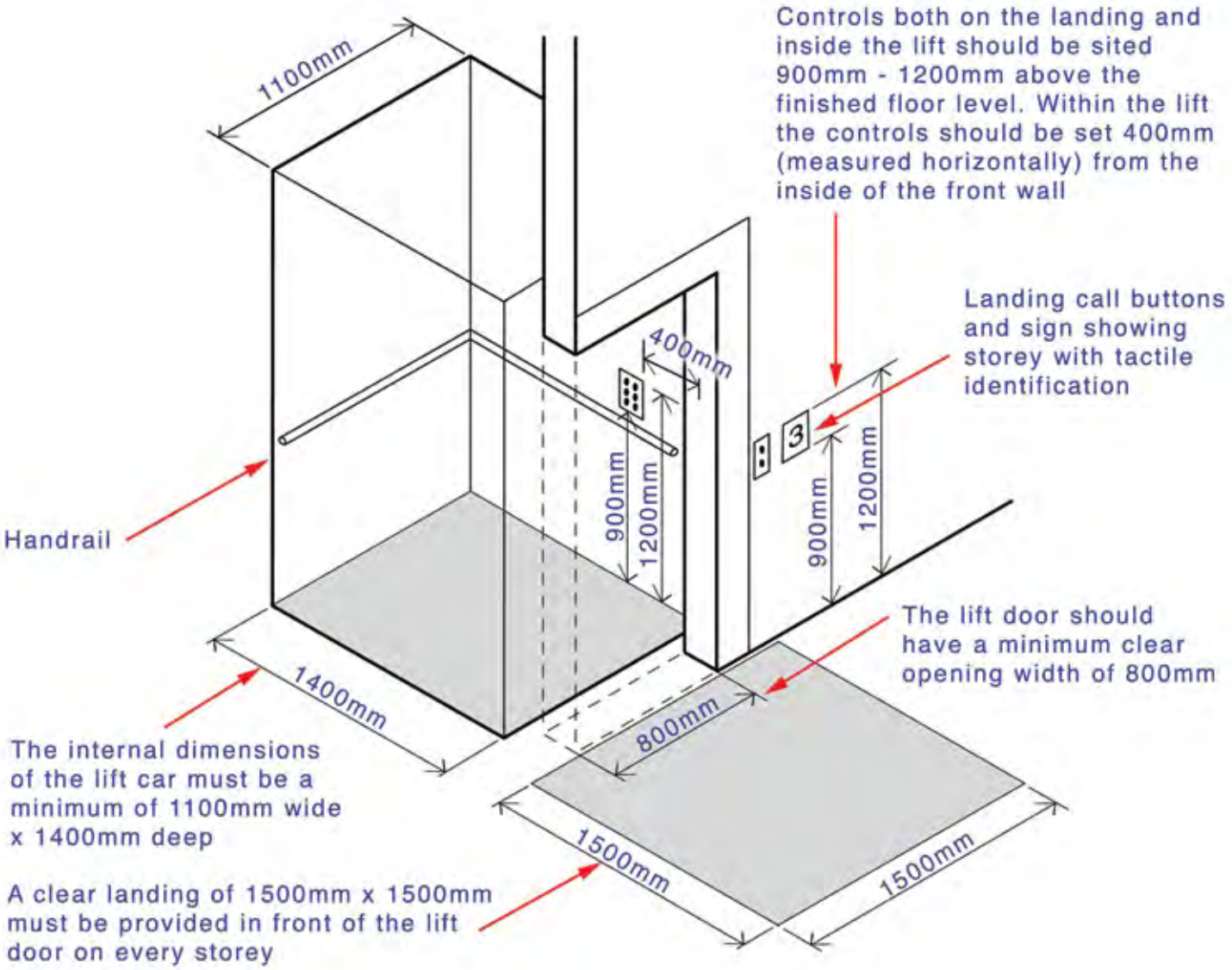

# Communal Stairs

Principle communal stairs that provide access to a dwelling should meet the provisions of Approved Document K to the building regulations for a general access stair.

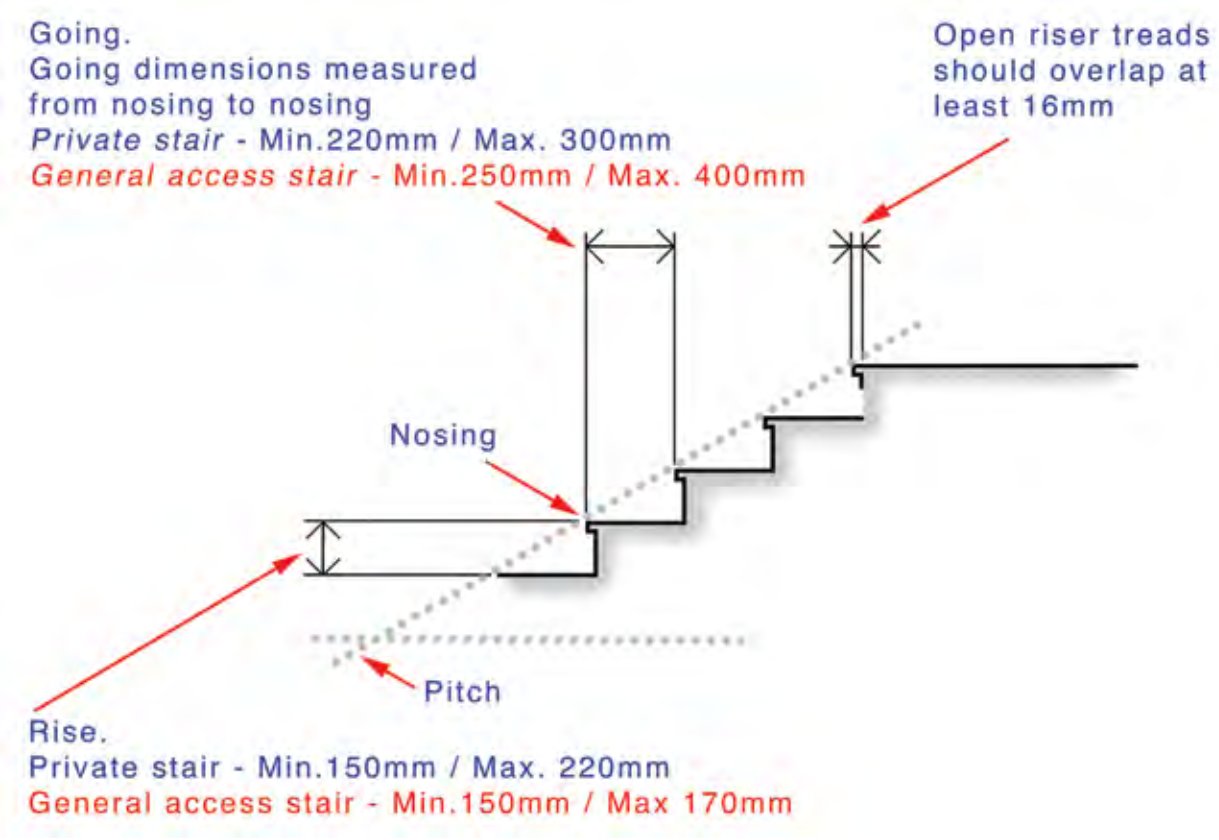

# Private Entrances

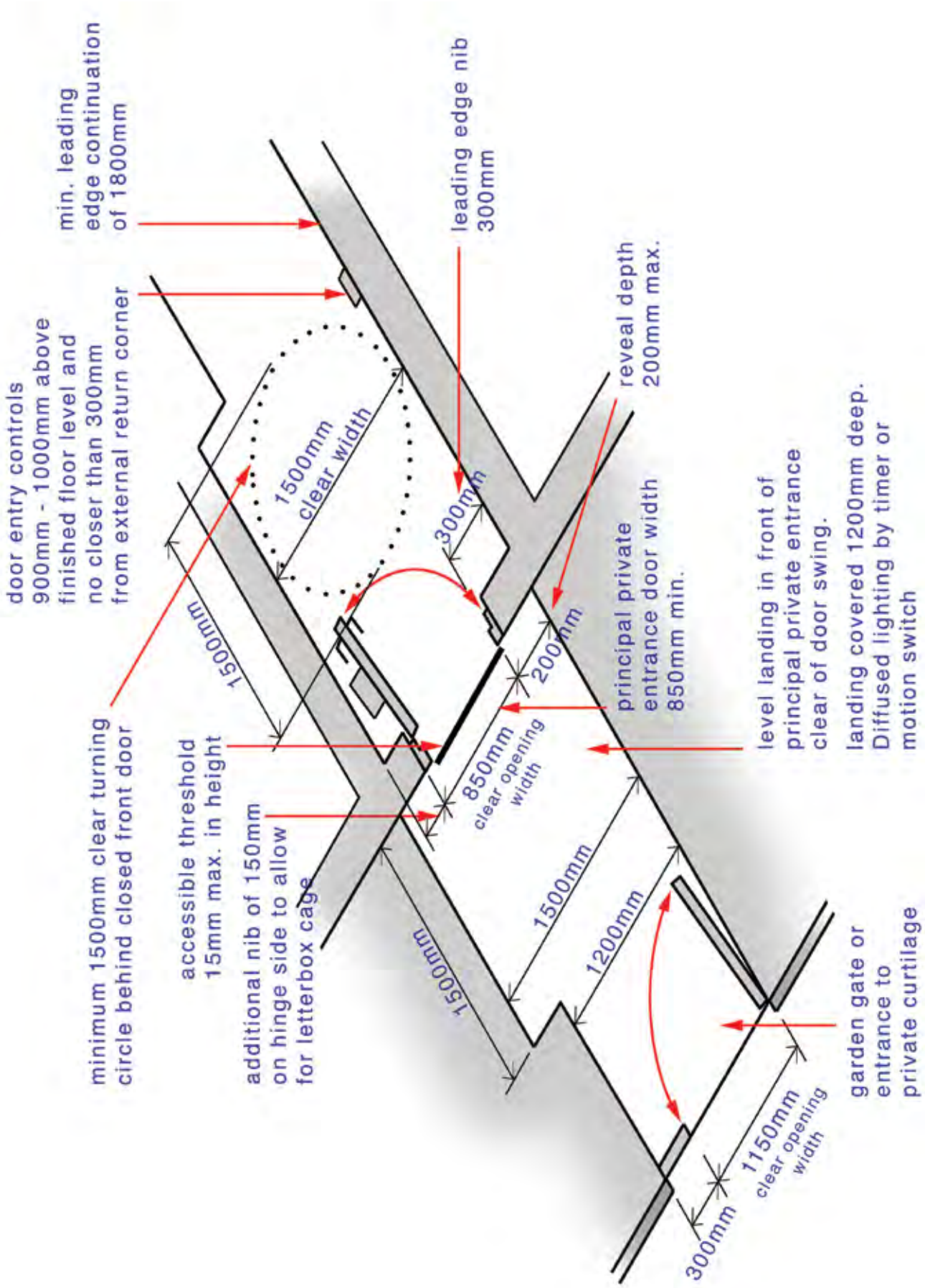

## Other External Doors

All other external doors, including to a garage, carport, amenity space, conservatory, balcony, terrace and any storage area that is integral or connected to a dwelling should:

- feature an accessible threshold with a maximum upstand of 15mm
- have a clear opening width of 850mm
- in the case of double doors, provide a minimum of one door leaf with a clear opening width of 850mm
- have a 200 mm (minimum) nib to the following edge of the door. The extra width created by the nib must be maintained for a minimum of 1500mm beyond it
- be positioned centrally within the thickness of the wall and ensure the reveal depth on the leading face of the door (usually the inside) is a maximum of 200mm
- provide between any lobby or porch doors, a minimum distance of 1500mm between the doors and/or door swings
- be designed with any required door entry controls between 900mm and 1000mm above the finished ground level

## Hall and Door Widths

To achieve good wheelchair manoeuvrability and movement into and between rooms, internal doors should:

- achieve a minimum clear opening width of 850mm irrespective of the direction of entry
- where they open outwards into a circulation area, be a minimum 800mm away from another door positioned on a return wall, unless a 1500mm turning circle is achieved between the two doors
- feature a minimum nib of 300mm to the leading edge, and a minimum nib of 200mm to the following edge

**NB:** These provisions do not apply to cupboards unless they are large enough to be entered. Wheelchair access is similarly not expected into ensuite bathrooms or showers that are an additional facility to the minimum requirements of a wheelchair adaptable, or wheelchair accessible dwelling, as set out in Part M to the Building Regulations.

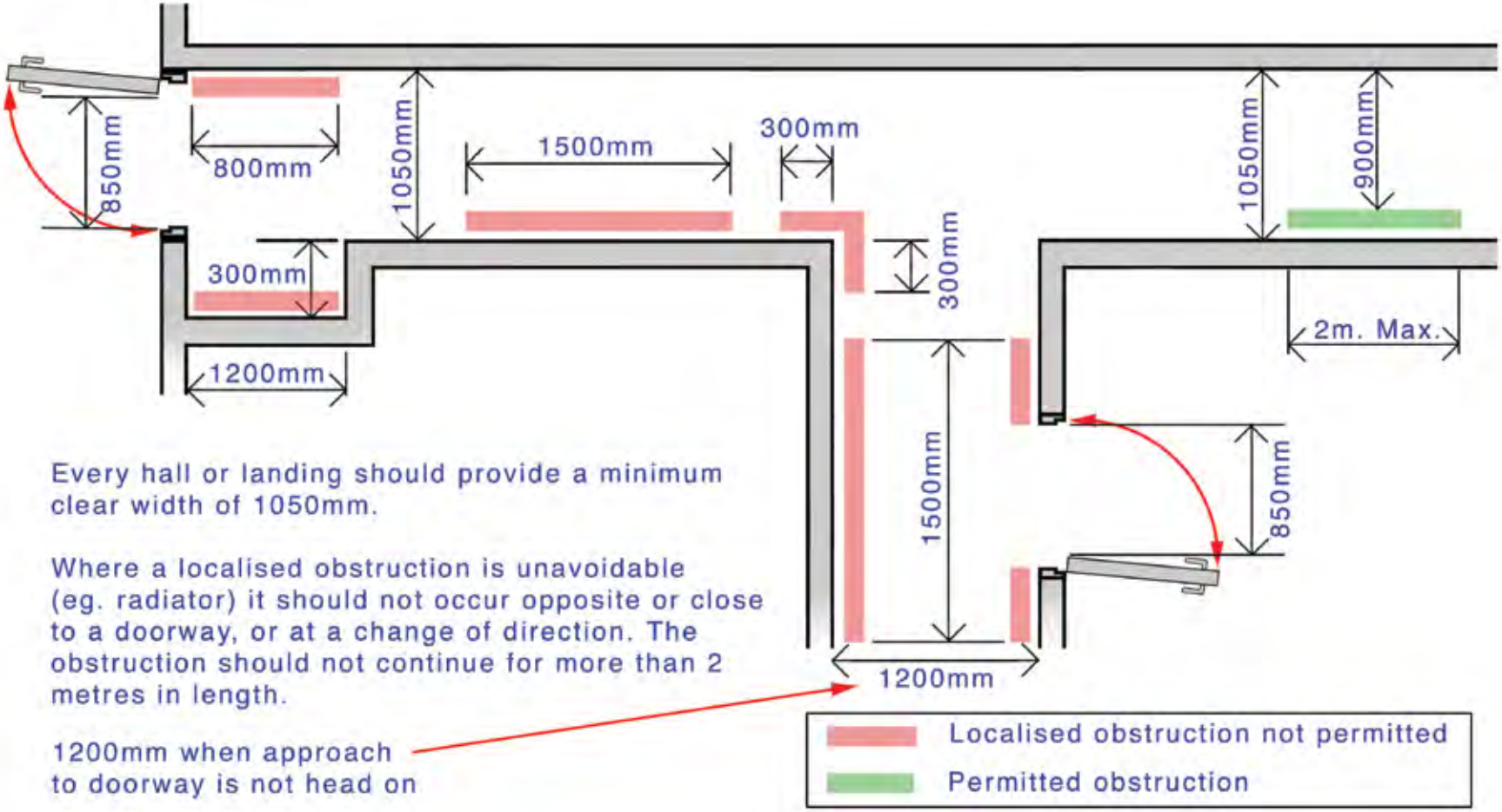
850mm
800mm
1050mm
1500mm
300mm
300mm
300mm
1200mm
1500mm
1200mm
1050mm
900mm
2m. Max.
850mm
Every hall or landing should provide a minimum clear width of 1050mm.
Where a localised obstruction is unavoidable (eg. radiator) it should not occur opposite or close to a doorway, or at a change of direction. The obstruction should not continue for more than 2 metres in length.
1200mm when approach to doorway is not head on
Localised obstruction not permitted
Permitted obstruction

## Wheelchair Storage Transfer Space

Wheelchair users typically require an area to store and charge two wheelchairs. Sufficient space should be provided to allow a person to (for example) transfer between an indoor and an outdoor wheelchair. New dwellings should incorporate a transfer/storage area that is:

- available on the entrance storey and preferably close to the principle private entrance
- 1100mm deep x 1700mm wide
- accessible from an area that has a minimum clear width of 1200 mm adjacent to the transfer area
- fitted with a power socket should be conveniently located within the space to allow both wheelchairs to be charged simultaneously

**NB:** Within a wheelchair adaptable dwelling, the storage and transfer space may be designed for another purpose, e.g. a storage cupboard, provided it can be converted to a wheelchair storage/transfer area without alteration to the structure or services.

This space should not be used as a substitute for the minimum requirements of storage, living spaces and bedrooms as prescribed in Part M to the Building Regulations.

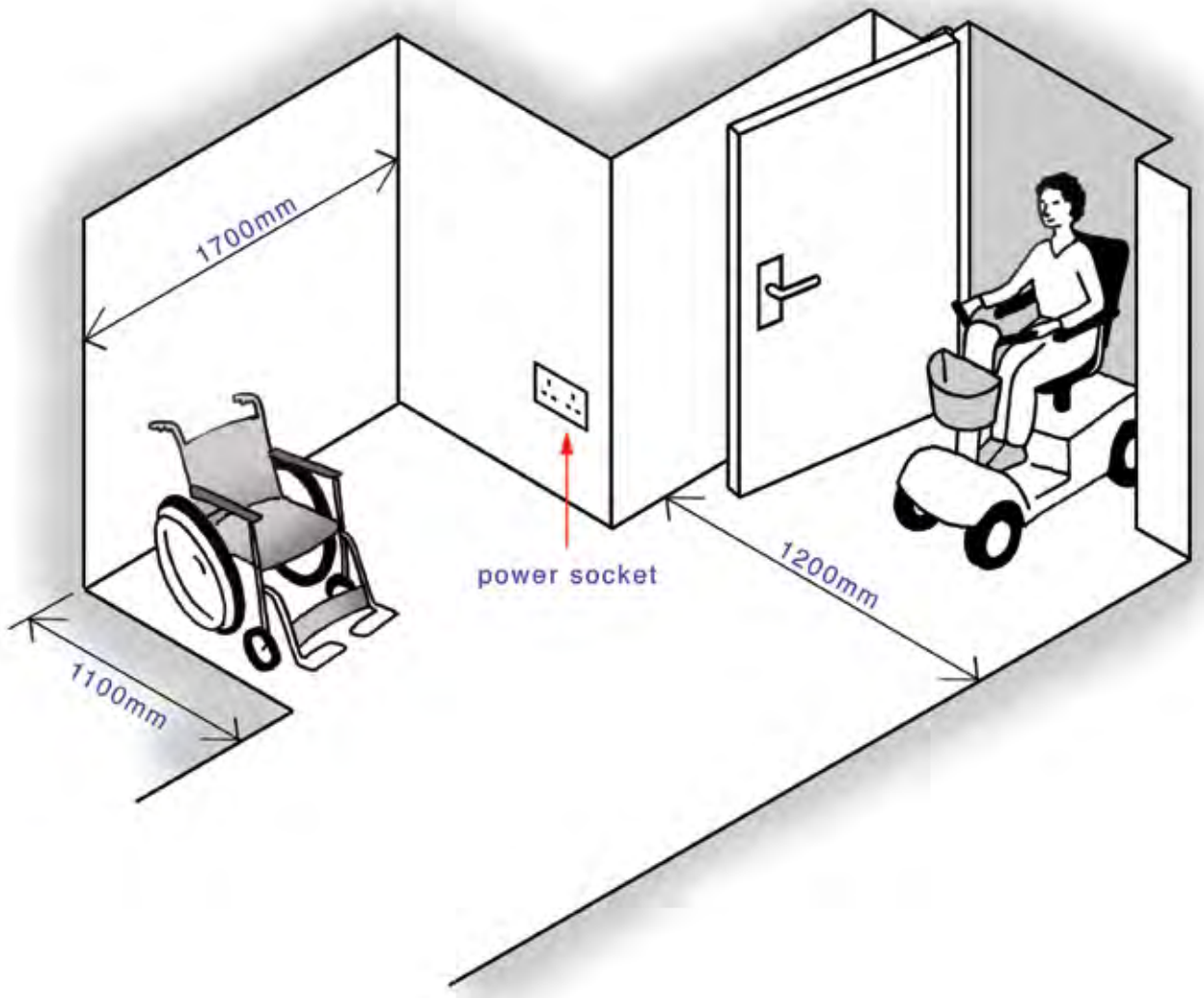

## General Storage Space

To ensure adequate provision for storage of household items, general storage space should comply with the table as set out below:

| General Built-in storage (minimum area) | | | | | | |
|---|---|---|---|---|---|---|
| Number of bedrooms | 1 | 2 | 3 | 4 | 5 | 6 |
| Minimum storage area (M2) | 1.5 | 2.0 | 2.5 | 3.0 | 3.5 | 4.0 |

- Storage space should ensure that 50% of its area (minimum) achieves head room between 900mm and 1500mm
- Spaces that fall below the minimum 900mm head height do not count
- The total area under the staircase that is used for storage should be counted as 1 m2

## Through-Floor-Lift

To facilitate wheelchair access to all storeys of a home, new developments designed to satisfy the requirements of a wheelchair adaptable dwelling should allow for the easy installation of a lift by means of a liftway and a soft pocket (a concealed ceiling opening) to allow for future lift installation. The liftway and soft pocket should allow a lift car and its vertical travel rails to be installed without the need for structural alterations.

In new developments where a percentage of affordable housing is to be defined as wheelchair accessible, a suitable through-floor-lift (or lifting platform) should be installed and commissioned at the build stage. The lift requirements for a two storey dwelling can typically be met by a domestic type lift designed to BS 5900, or, a lifting platform to BS EN 81 – 41.

To satisfy the requirements for a **wheelchair adaptable and wheelchair accessible** dwelling, the design must include a:

- continuous liftway of 1100mm wide x 1650mm long (internally), linking every floor of the dwelling
- liftway that can be entered from its narrowest point on every floor
- 1500mm (minimum) clear turning circle is provided, clear of, and in front of the liftway/lift door when open at 90 degrees
- suitable power socket to supply a lift should be installed close to the liftway - some lifts require a three-phase power supply
- liftway located in the circulation area on every floor, (regardless of the number of storeys), i.e. not travel through or terminate within a bedroom or living space

**NB:**

- the lift door should be opposite the back wall to that of its vertical travel rails
- the lift door(s) should open and close automatically

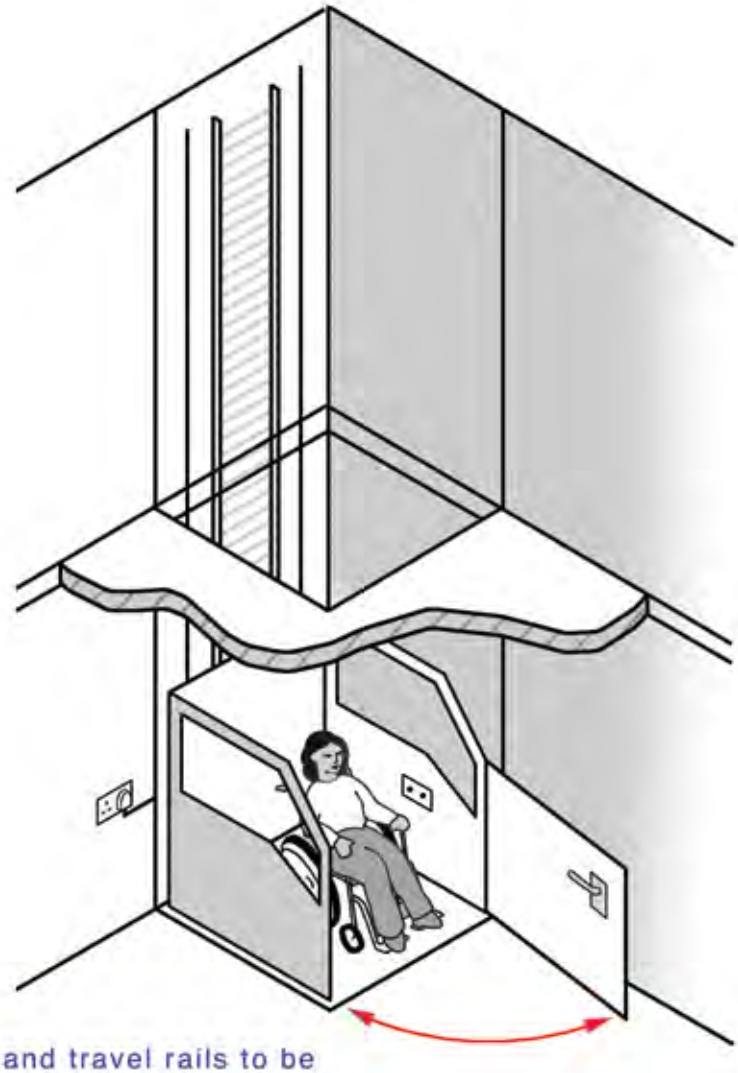

lift car and travel rails to be installed without the need for structural alterations.

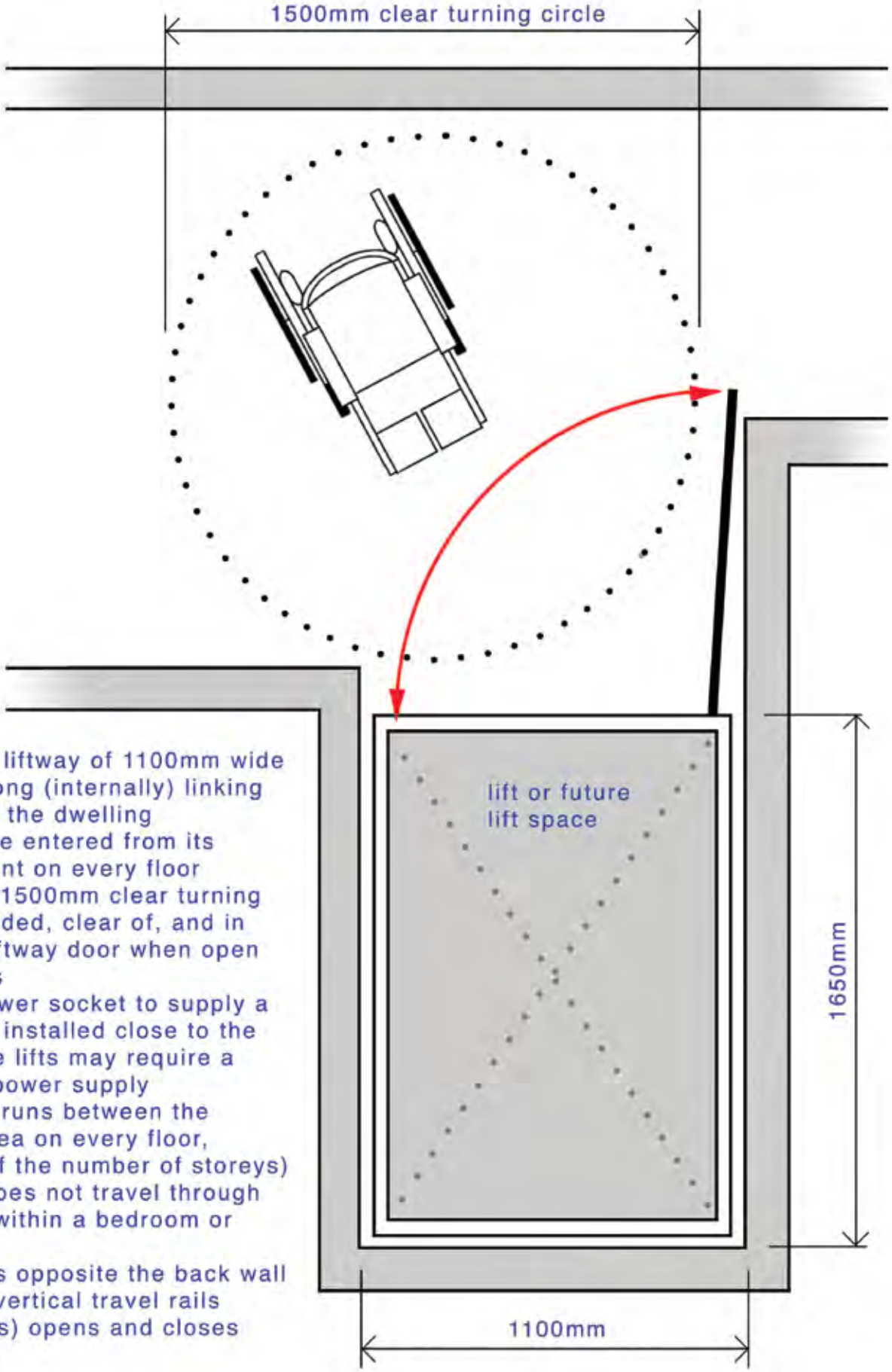


- A continuous liftway of 1100mm wide by 1650mm long (internally) linking every floor of the dwelling
- Liftway can be entered from its narrowest point on every floor
- No less than 1500mm clear turning circle is provided, clear of, and in front of the liftway door when open at 90 degrees
- A suitable power socket to supply a lift should be installed close to the liftway - some lifts may require a three-phase power supply
- The lift shaft runs between the circulation area on every floor, (regardless of the number of storeys)
- The lift car does not travel through or terminate within a bedroom or living space
- The lift door is opposite the back wall to that of its vertical travel rails
- The lift door(s) opens and closes automatically

## Private Stairs and Changes in Level within the Home

An ambulant disabled person should be able to move within and between all storeys. **Wheelchair adaptable** and **wheelchair accessible** dwellings should be designed to allow for a future stair lift from the entrance storey to a storey above or below that features the main bedroom and bathroom (as defined in Approved Document M).

The design of dwellings should ensure:

- all rooms and facilities on the entrance storey are step free
- no change in level on any other storey within the home
- all stairs achieve a minimum clear width of 850 mm when measured 450 mm above the pitch line of the treads (ignoring any newel post)
- stairs are designed to satisfy the requirements of Approved Document K to the Building Regulations.

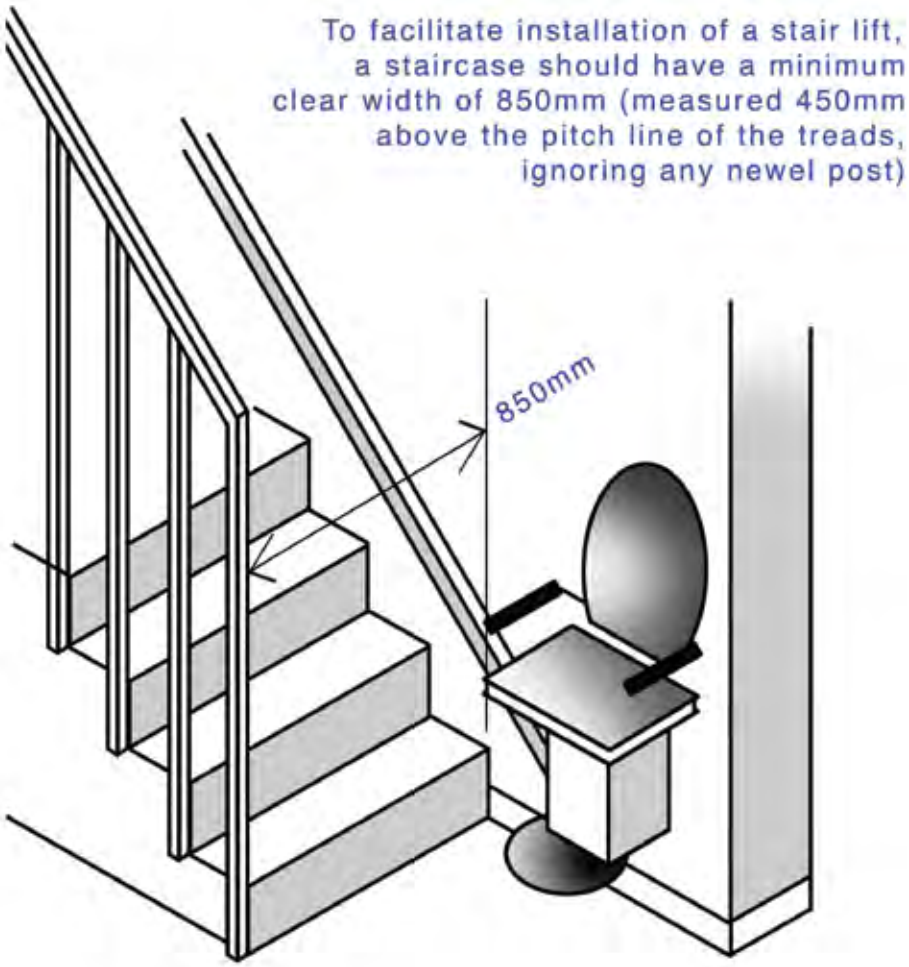

# Habitable Rooms

Living Areas

Living spaces should be convenient and have a step free relationship between the entrance level WC and principle private entrance. A living area or space should:

- be provided on the entrance storey
- achieve a combined internal floor area for the living, dining and kitchen space, as per the table below
- have living area window glazing that begins at a maximum 850mm above the finished floor level, or at the minimum height to satisfy Part K for guarding to windows (whichever is lower)

Living spaces should be convenient and have a step free relationship between the W.C. and principle private entrance. A living area or space should:

- be provided on the entrance storey
- achieve a combined internal floor area for the living, dining and kitchen space, as per the table below:

| Minimum combined floor area for living, dining and kitchen space | | | | | | |
|---|---|---|---|---|---|---|
| Number of bed spaces | 2 | 3 | 4 | 5 | 7 | 8 |
| Minimum floor area (M2) | 25 | 27 | 29 | 31 | 35 | 37 |

- ensure that glazing to the principle window within the living area begins at a maximum 850mm above the finished floor level (or at the maximum height reasonable to satisfy Part K for guarding windows)

## Kitchen and Eating Areas

The relationship between a kitchen, dining and living area should be convenient and step free. Kitchen and eating areas should:

- be within the same room, or connected to each other, and on the entrance storey
- have a minimum clear access zone of 1500mm wide between all kitchen units and appliances
- feature a section of worktop no less than 2200mm long. This section should be height adjustable, (or may be a fixed section capable of being re-fixed at an alternative height)

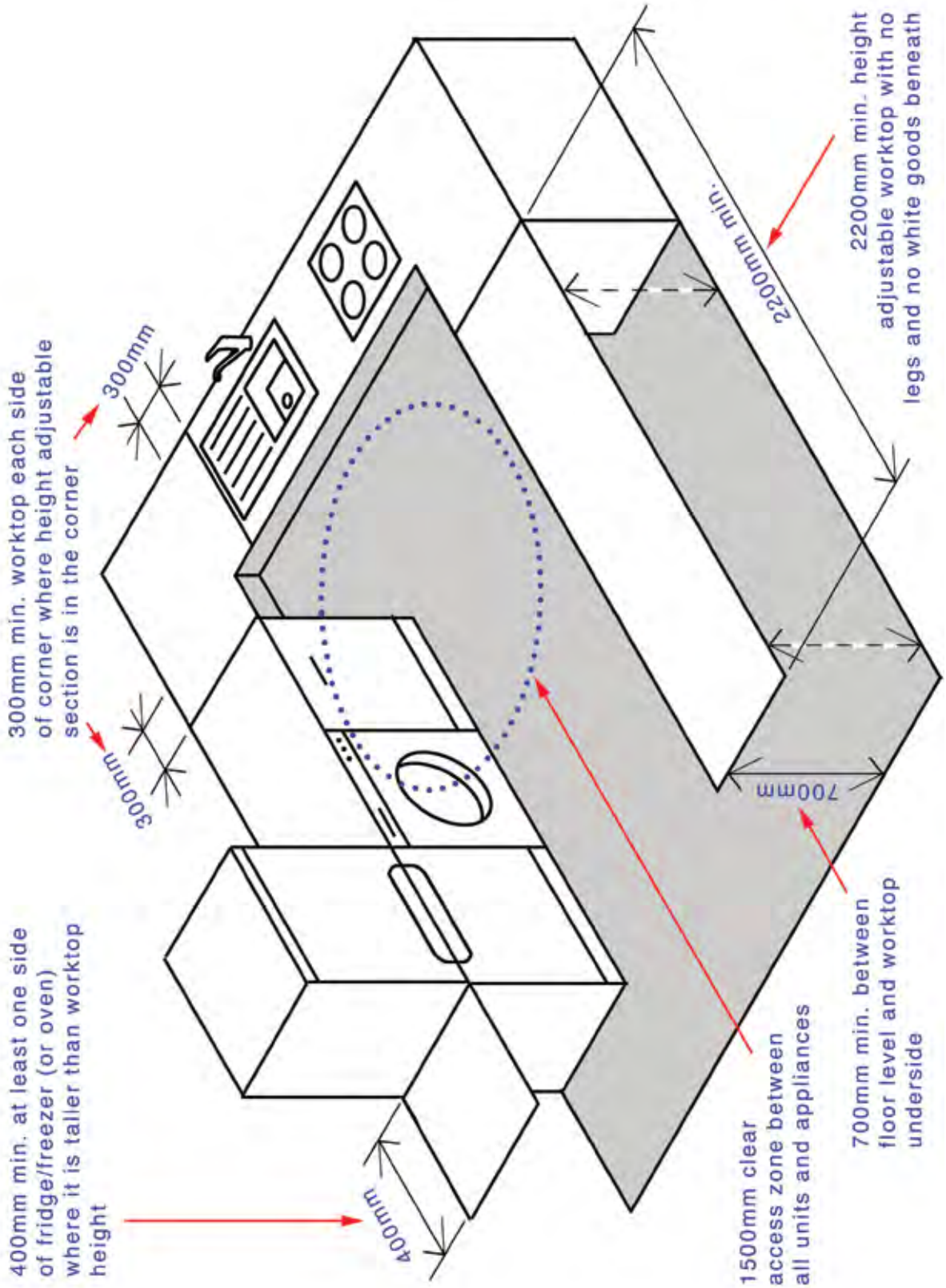

Where a dwelling is defined as **wheelchair adaptable** it should provide kitchen worktops in accordance with the following table:

| Minimum length of kitchen worktop, including fittings and appliances, to be installed prior to occupation of a ***wheelchair adaptable*** dwelling | | | | |
|---|---|---|---|---|
| Number of bed spaces | 2 | 3 & 4 | 5 | 6 - 8 |
| Min. worktop length in mm | 4330 | 4730 | 5630 | 6730 |

Where a new dwelling is required to be **wheelchair accessible,** a kitchen should provide an overall kitchen worktop length in line with the following table:

| Minimum length of kitchen worktop, including fittings and appliances, to be installed prior to occupation of a ***wheelchair accessible*** dwelling | | | | |
|---|---|---|---|---|
| Number of bed spaces | 2 | 3 & 4 | 5 | 6 - 8 |
| Min. worktop length in mm | 6130 | 6530 | 7430 | 8530 |

**NB:** Ensure a minimum worktop run of 400mm to at least one side of the oven and fridge/fridge freezer where they are taller than the worktop height. Refer to Approved Document M to the Building Regulations for full details on all other kitchen fittings.

## Principal Bedroom

**Wheelchair adaptable** and **wheelchair accessible** homes should provide a minimum of one fully accessible bedroom close to a main bathroom.

Provisions are to include:

- a principle double bedroom with a minimum floor area of 13.5 m2 and which is a minimum of 3m wide
- a minimum clear access route, 750mm wide from the bedroom doorway to the window
- no less than 1200mm x 1200mm manoeuvering space on the inside of the bedroom doorway, clear of the bed and door (in the closed position)
- a ceiling structure within every bedroom to be sufficiently strong to allow the fitting of an overhead hoist capable of lifting 200kg
- a 1000mm wide clear access zone in all other double bedrooms to one side and at the foot of the bed, and in front of all furniture

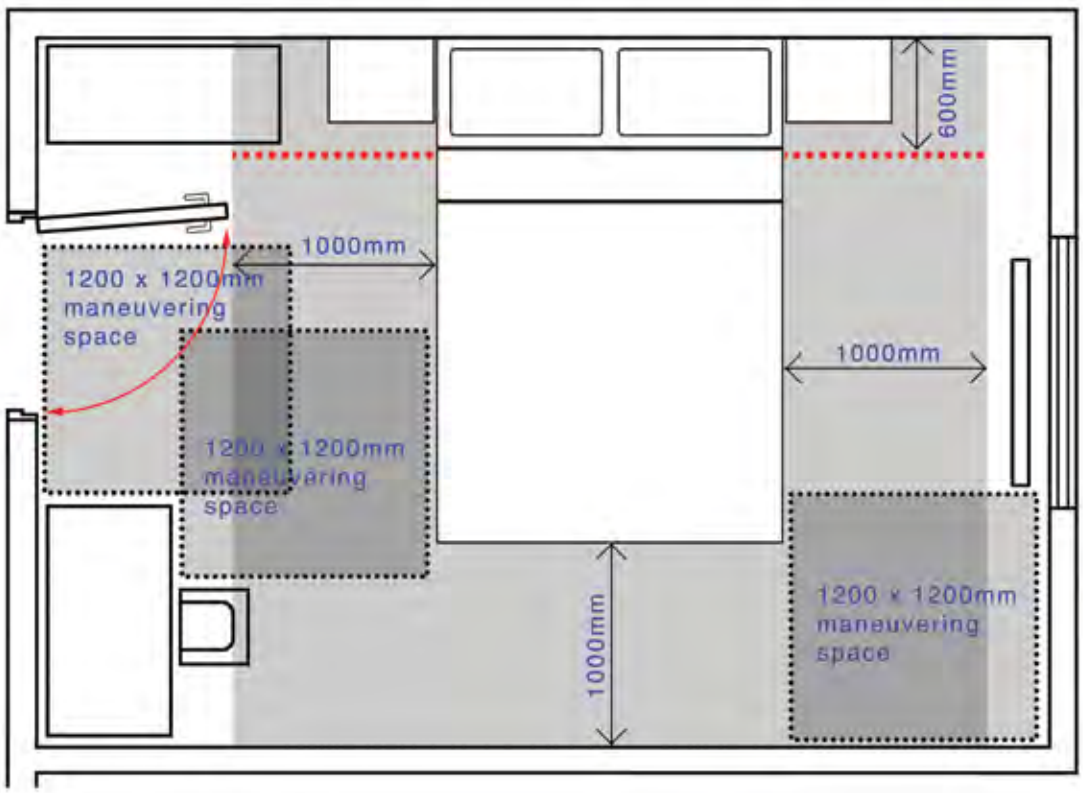


## Single Bedrooms

- in all single and twin bedrooms, a minimum 1000mm clear access zone to one side of each bed and in front of all furniture
- a minimum width of 2.4m and a floor area no less than 8.5 m2 in all single bedrooms

**NB:** Bed and furniture sizes should comply with the furniture schedule prescribed in Part M.

## Sanitary Facilities

All new residential developments required to be **wheelchair adaptable** or **wheelchair accessible** are to provide suitable toilet and washing facilities for wheelchair users.

a) Dwellings with four or more bed spaces should provide two wheelchair accessible toilets in separate bathrooms or WC/cloakrooms.

b) Every room containing an installed level access shower to be constructed as a wet room.

c) All walls, including ducts and boxings, within every bathroom, shower room, and WC/cloakroom to be capable of withstanding a 1.5 kN/m² load to support grab rails, flip down seats and other adaptations.

d) The ceiling structure in every bathroom, shower room and WC should be capable of supporting an overhead track hoist load of 200kg.

e) Stacks or soil and down pipes should be sited away from the toilet pan (except if there is no other practical alternative, in which case they must always be on a sidewall of the cubicle).

**NB:** The detail pertaining to the position and type of fixtures and fittings should accord with Approved Document M.

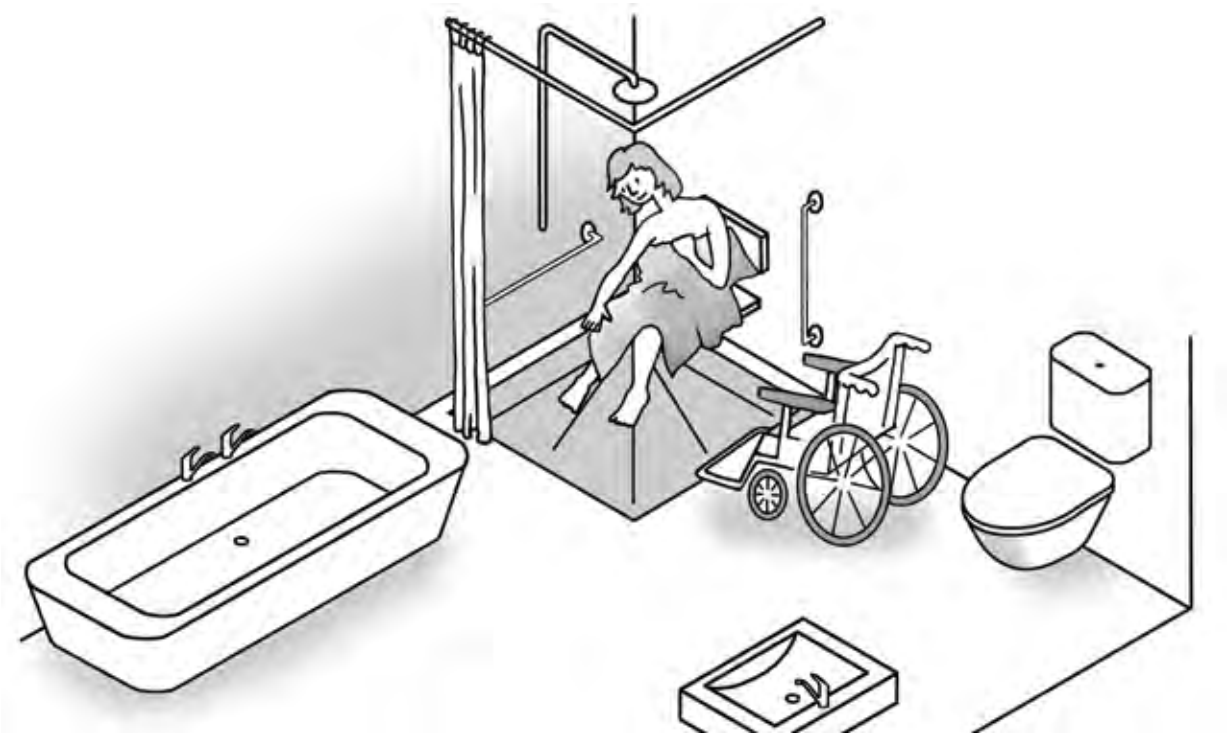

## Summary of minimum requirements for sanitary provision in typical dwelling types

| Single storey dwelling (typically a flat or bungalow) | |
|---|---|
| **Occupancy** | **Typical minimum sanitary provision** |
| 2 or 3 bedspaces | Bathroom with level access shower |
| 4 bedspaces | Bathroom with level access shower and separate WC/cloakroom |
| 5 bedspaces or more | Bathroom with level access shower and separate WC/cloakroom (or second bathroom).<br>**Wheelchair accessible** dwellings must also provide a level access shower and a bath |
| | |
| **Two or three storey dwelling (typically a house or maisonette)** | |
| **Occupancy** | **Typical minimum sanitary provision** |
| 2 or three bedspaces | Bathroom with level access shower on same level as principal bedroom + entrance storey WC/cloakroom or second bathroom.<br>**Wheelchair accessible** dwellings must also provide both a level access shower and a bath |
| 4 bedspaces | Bathroom with level access shower on same level as principal bedroom and entrance storey WC/cloakroom or second bathroom |
| 5 bedspaces or more | Bathroom with level access shower on same level as principal bedroom and entrance storey WC/cloakroom or second bathroom.<br>**Wheelchair accessible** dwellings must also provide both a level access shower and a bath |

## WC Facilities on the Entrance Storey

To ensure that a suitable and convenient WC is available for a wheelchair user to use, all new dwellings should ensure that:

- the entrance storey features a wet room (which may be a WC/cloakroom or a bathroom), that contains a toilet, a basin, and an installed level access shower that complies with the requirements of Approved Document M

- the door to the WC or bathroom opens outwards

**NB:** Where a dwelling provides a bathroom and a WC/cloakroom on the same storey, it need only be sized and fitted as a secondary facility as detailed in Approved Document M.

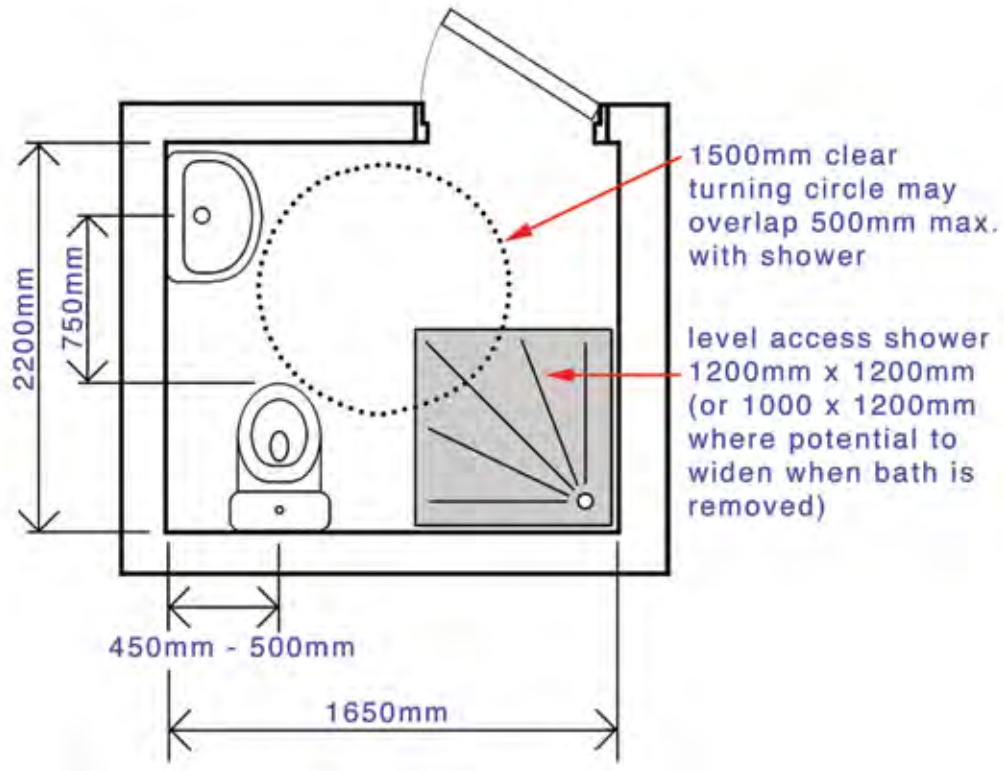

## Bathroom Facilities

A suitable and convenient bathroom is a requirement within a **wheelchair adaptable** or **wheelchair accessible** dwelling.

1. Dwellings with up to four bed spaces are to have a minimum of one bathroom that contains a toilet, basin, and installed level access shower with the potential for a bathtub to be installed above it.

2. The bathroom containing the installed level access shower should be located on the same storey as the principle double bedroom.

3. In dwellings with five bed spaces or more, where a shower room and a bathroom are on the same storey, either room (but not both) may be an ensuite facility.

4. Where a fully accessible shower room is on the same storey as a principle bedroom, a separate room providing the bath need only comply with the requirements for an M4(2) bathroom.

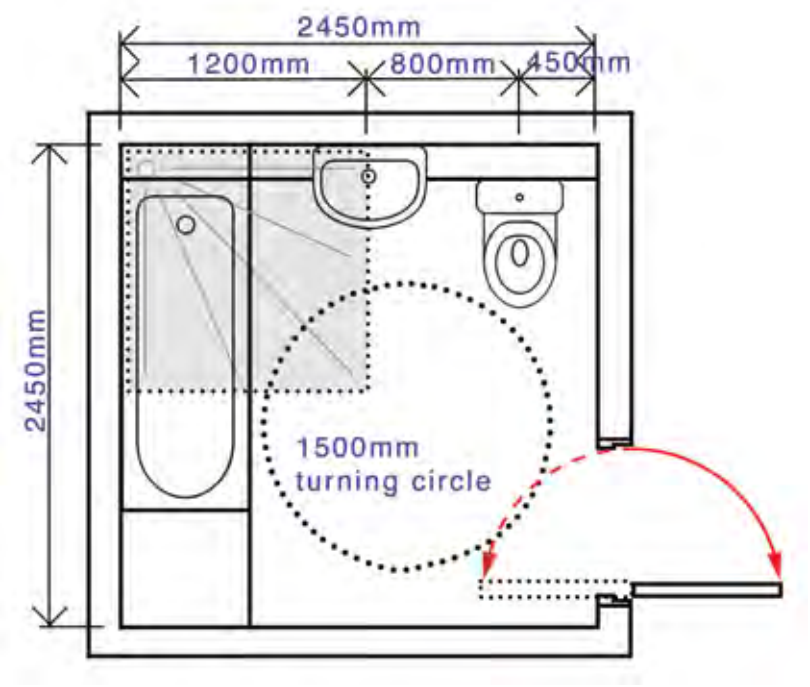


## Bathrooms in Wheelchair Adaptable Dwellings

Where a dwelling is to be defined as **wheelchair adaptable**, it is acceptable, though not a requirement, for a bathtub to be installed over a fully working level access shower area.

Plans submitted with a planning application should illustrate how a bathroom could be easily adapted to meet the provisions for a wheelchair accessible bathroom. (Plans need only show a bath or level access shower).

# Bathrooms in Wheelchair Accessible Dwellings

Where a dwelling is required to be wheelchair accessible, the bathroom should meet the following requirements:

1. The WC, handbasin, level access shower, and bathtub (where provided), and their associated clear access zones, should be designed as per the following example.

2. Dwellings with up to four bed spaces are to specify an installed level access shower by default, but a bathtub can be accommodated as an alternative if required by a known occupier.

3. In dwellings with five bed spaces or more, a working bath and an installed level access shower must be provided (in one or more bathrooms on the same storey as the principle bedroom).

4. The furniture layout of bathrooms and shower rooms should accord with the example opposite.

5. The level access shower should be positioned in a corner to enable a shower seat to be fitted on one wall with shower controls installed on an adjacent wall.

6. The bathroom(s) must provide a 1500 mm turning circle.

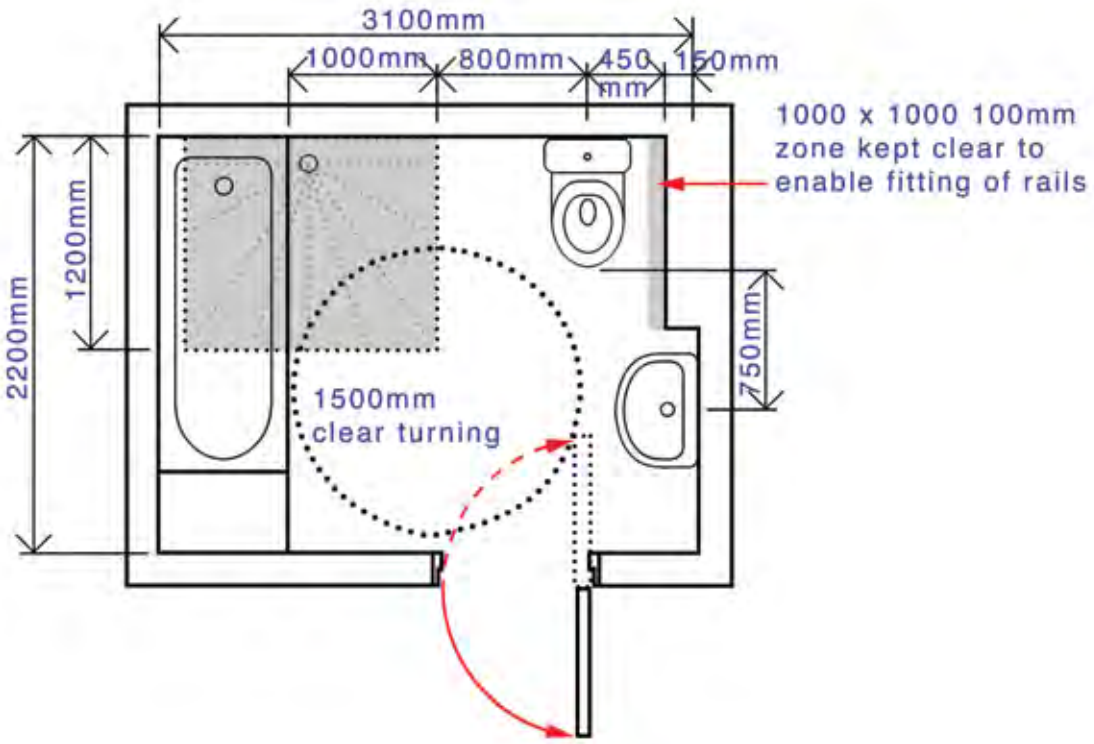

## Services and Controls

To assist a wheelchair user to reach services and controls, including but not limited to, the consumer unit, sockets, switches, stopcocks, and controls, they should be installed and specified in accordance with Approved Document M to the Building Regulations.

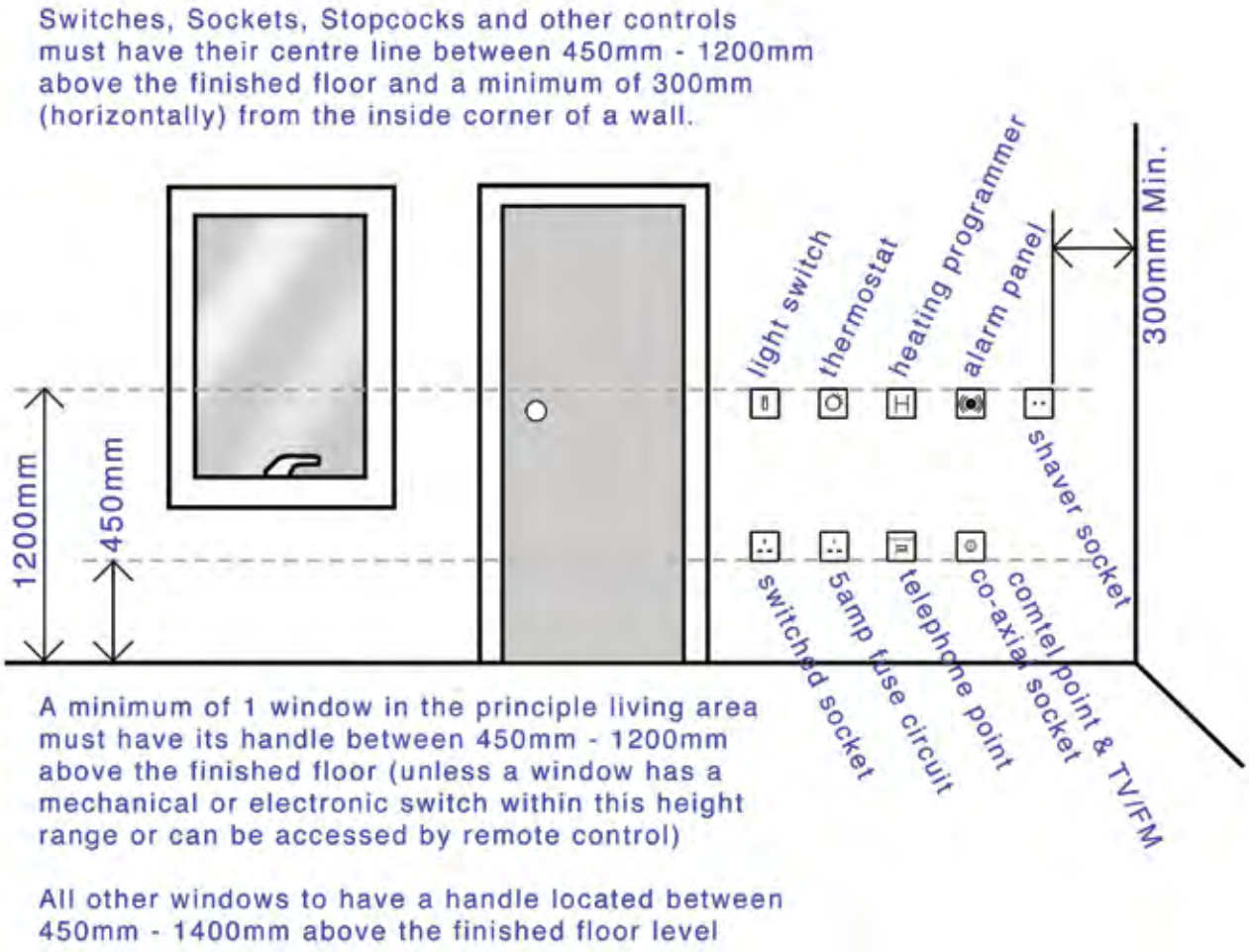


## Private Outdoor Space

A wheelchair user must be able to access and use every private outdoor space, be it a private garden, balcony or roof terrace. To satisfy the requirements of Part M to the Building Regulations, every private outdoor space must provide a:

- minimum clear width of 1500mm
- minimum clear turning circle of 1500mm, which is level and free of any door swing
- level or gently sloping path that achieves a minimum clear width of 1050mm to every private refuse, recycling, cycle, or other external store
- clear turning circle of 1500mm in diameter at each end of every path
- gate (or gateway) that has a minimum clear opening width of 850mm, 300mm nib to the leading edge, and 200mm nib to the following edge
- door with a minimum clear opening width of 850mm to every external store
- ground surface suitable for wheelchair users

## Sheltered housing/Residential developments for over 55s

New homes specifically for the above group in both public and private sectors, must comply with Category M4(2) and M4(3) as specified in Approved Document M to the Building Regulations.

New developments must meet the minimum requirements of Approved Document Q to the Building Regulations, and should endeavour to obtain a Secured by Design, design award. More details of this can be found at: **www.securedbydesign.com**

## Residential Care Homes

To be built in accordance with the Care Quality Commission National Minimum Standards and to have regard to the best practice guidance contained in this document. For all newly built homes and first time registrations, the location and layout of the home should be suitable for its stated purpose.

Paragraphs 3.41 – 3.52 of Part B of the Building Regulations (Fire Safety) as amended 2007 must be met.

A report by the Housing our Ageing Population Panel for Innovation (HAPPI report) identified ten elements that are critical to achieving age-inclusive housing, which Hillingdon Council fully supports.

Housing for older people should ensure:

- generous internal space standards
- plenty of natural light in the home and in circulation spaces
- balconies and outdoor space, avoiding internal corridors and single-aspect flats
- adaptability and 'care aware' design which is ready for emerging telecare and telehealthcare technologies
- circulation spaces that encourage interaction and avoid an 'institutional feel'
- shared facilities and community 'hubs' where these are lacking in the neighbourhood
- plants, trees, and the natural environment
- high levels of energy efficiency, with good ventilation to avoid overheating
- extra storage for belongings and bicycles
- shared external areas such as 'home zones' that give priority to pedestrians

Further information can be obtained from **www.housinglin.org.uk**

# Public, Commercial and Employment Development

## Streetscape

Pavements, footways and other pedestrian routes should:

- be at least 2000mm wide
- in less busy areas, be at least 1500mm in width
- provide a head height of at least 2600mm from the pavement to any overhead protrusion
- highlight potential hazards and edges using a kerb or guardrail, or by introducing a change in surface texture and/or colour or tonal contrast
- be level, with gradient not exceeding 1 in 20, with cross-falls no greater than 1 in 50
- have surfaces that are slip resistant, even, firm and durable
- be direct, well lit and clearly defined
- not feature drainage gratings or gully covers, unless unavoidable. (If essential, drainage gratings should be positioned as far as possible from the main pedestrian flow, set flush with the surrounding surface, with slots no more than 13mm wide and set at right angles to the dominant line of travel)
- ensure gaps in paving do not exceed 10mm
- have any street furniture positioned to maintain a 'clear corridor' and allow unhindered pedestrian flow. Street furniture should be clearly distinguishable from its background
- not permit the display of freestanding advertising boards
- avoid the use of bollards. Where essential, bollards should be at least 1000mm high, feature a contrasting band and not be linked by a chain

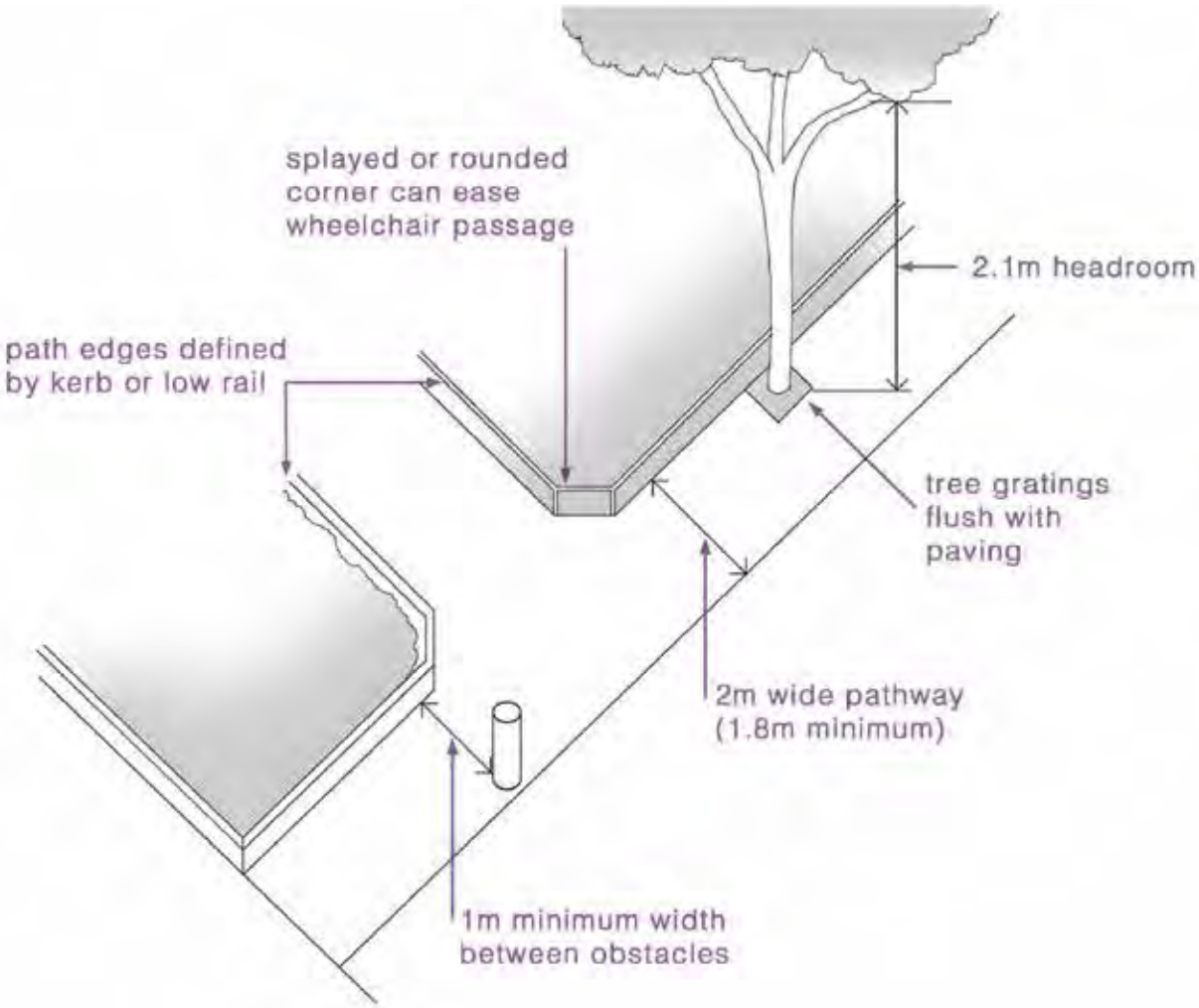
splayed or rounded
corner can ease
wheelchair passage
2.1m headroom
path edges defined
by kerb or low rail
tree gratings
flush with
paving
2m wide pathway
(1.8m minimum)
1m minimum width
between obstacles

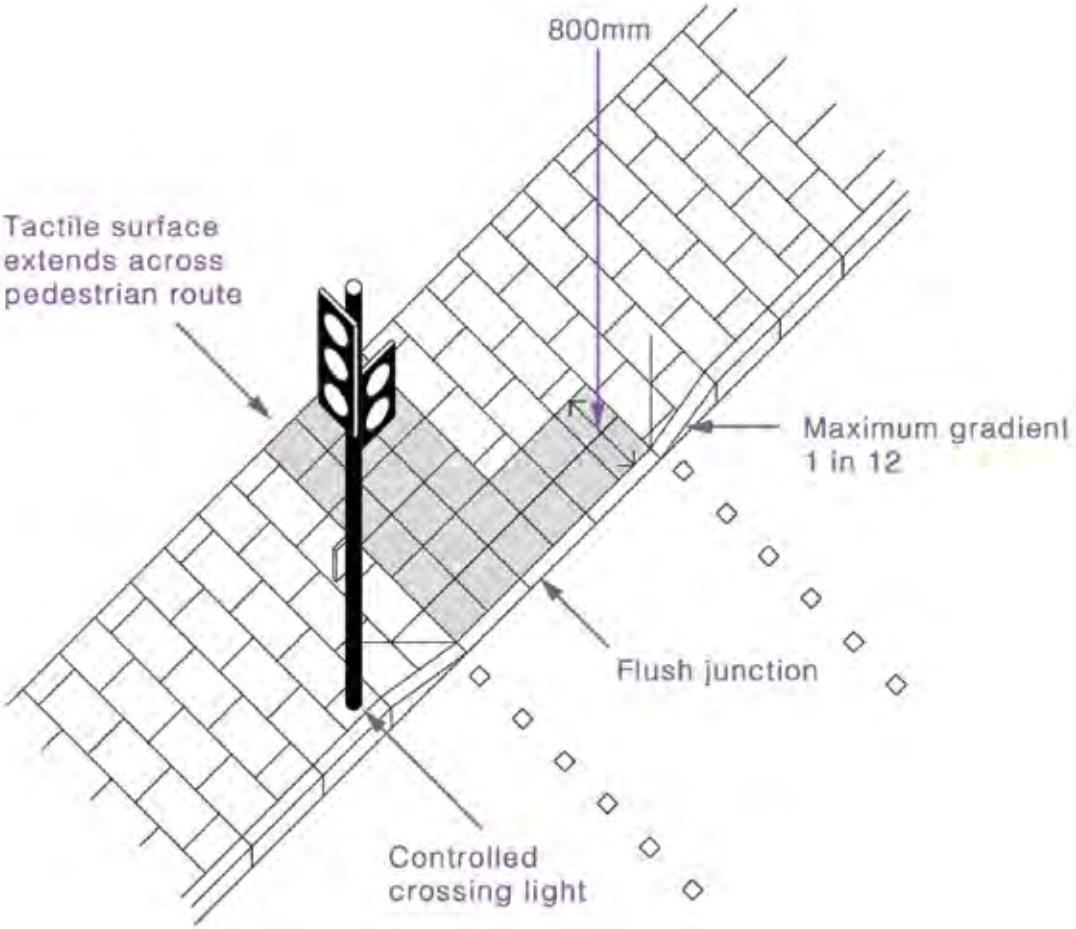
800mm
Tactile surface
extends across
pedestrian route
Maximum gradient
1 in 12
Flush junction
Controlled
crossing light

## Pavements, footways and other pedestrian routes must also:

- feature dropped kerbs at junctions and designated crossing points with appropriate tactile paving. (All tactile paving must be used sparingly and follow the guidance given in Guidance on the use of Tactile Paving Surfaces, DfT 2007)

- ensure that dropped kerbs are flush with the carriageway, however, a 6mm max. level difference is acceptable using a rounded bull nose, if engineering constraints prevent otherwise

- where waiting is likely, provide seating with armrests and a seat height of 450-500mm with space for wheelchairs and pushchairs alongside

- otherwise to conform to the latest BS 8300

## Approach to Buildings and Facilities

The location and orientation of a building within a site influences accessibility generally but particularly the distances people need to travel. Careful design minimises access barriers associated with, for example, gradients, walking distances, as well as potential conflicts with cyclists and motorists.

As far as possible, access to a building must:

- be level from the site entrance and throughout

- be clearly defined and well lit

- where, due to site constraints, a change of level is unavoidable, ensure a gentle gradient no steeper than 1 in 60 across the whole site, or 1 in 20 with level landings for every 500mm rise

- ensure any necessary crossfall is no steeper than 1 in 50

- only be via a ramp where an Access Statement demonstrates what technical or other constraints prevent an approach gradient of 1 in 20 or less. (Ramp design should follow guidance in this document)

**NB:** Where site constraints prevent the installation of a ramp to an existing entrance, it is often possible to adjust the ground level to eliminate steps.

## Ramps

Any necessary ramps should be accompanied by steps that serve a principal entrance.

Ramps must:

- be substituted by an alternative means of access, such as a lift, if the total rise exceeds 2m. (Stepped ramps are not permissible)
- ensure ramp length, gradient and specification adhere to the requirements overleaf
- have the lowest practicable gradient, preferably not exceeding 1 in 15
- have a minimum surface width of 1.5m
- feature a 100m minimum upstand on outer edge(s)
- provide landings at the foot and head of a ramp, at least the width of the ramp and 1.5m minimum length clear of any door swings or other obstruction
- feature intermediate landings 1.5m long that are clear of any door swings or other obstruction, or potential obstruction
- provide a slip-resistant surface
- provide additional artificial lighting at the top and bottom of flights; at least 200 lux (refer to BS 8300 for detailed guidance)
- NOT feature corduroy tactile warning at the top and bottom of ramp flights (corduroy tactile warning to feature on steps only)

| Gradient | Maximum length of ramp between level landings | Maximum Rise |
|---|---|---|
| 1 in 15 | 5m | 333mm |
| 1 in 16 | 6m | 375mm |
| 1 in 17 | 7m | 411mm |
| 1 in 18 | 8m | 444mm |
| 1 in 19 | 9m | 473mm |
| 1 in 20 | 10m | 500mm |

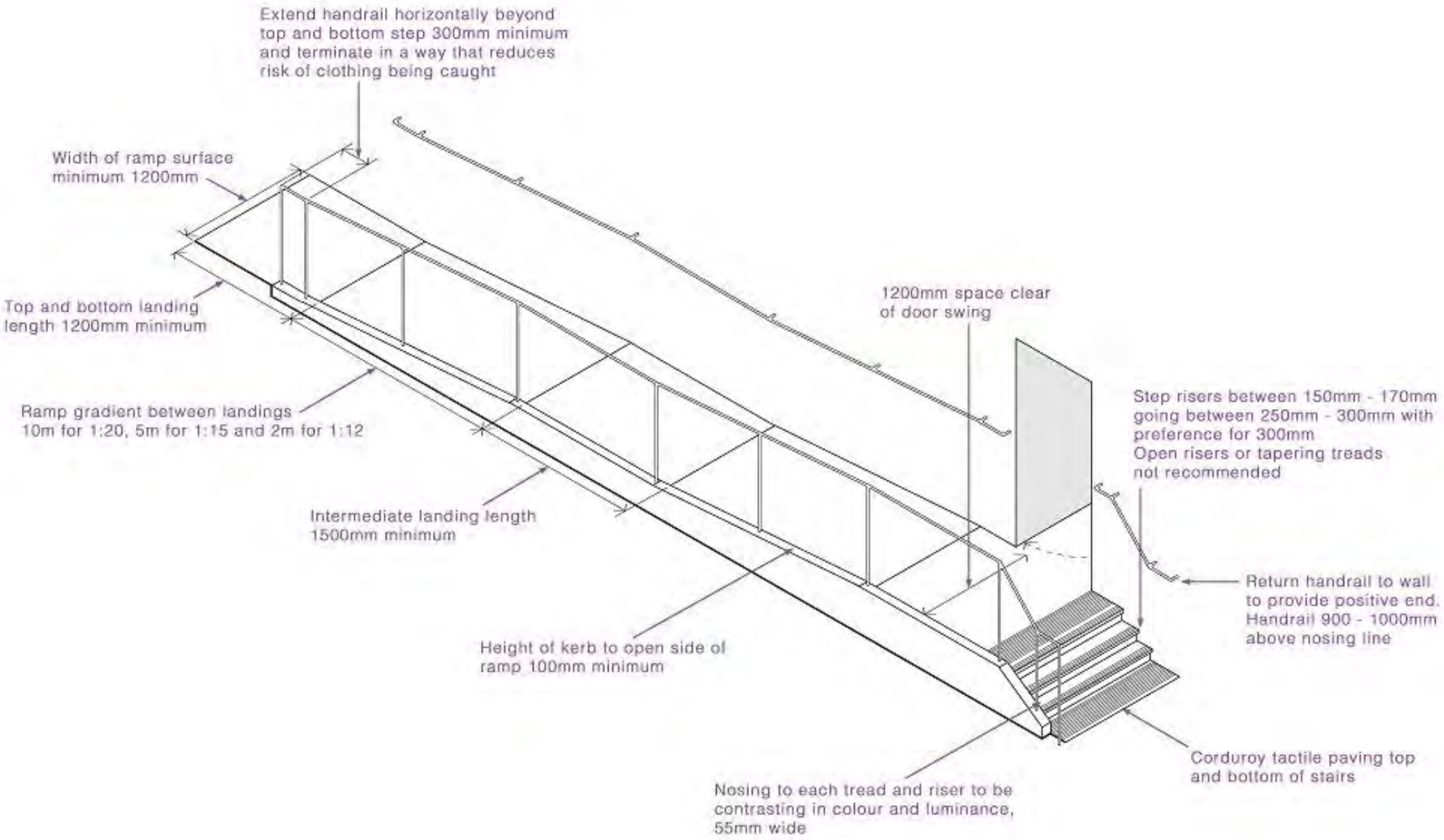
Extend handrail horizontally beyond top and bottom step 300mm minimum and terminate in a way that reduces risk of clothing being caught
Width of ramp surface minimum 1200mm
Top and bottom landing length 1200mm minimum
Ramp gradient between landings 10m for 1:20, 5m for 1:15 and 2m for 1:12
Intermediate landing length 1500mm minimum
Height of kerb to open side of ramp 100mm minimum
Nosing to each tread and riser to be contrasting in colour and luminance, 55mm wide
1200mm space clear of door swing
Step risers between 150mm - 170mm going between 250mm - 300mm with preference for 300mm
Open risers or tapering treads not recommended
Return handrail to wall to provide positive end. Handrail 900 - 1000mm above nosing line
Corduroy tactile paving top and bottom of stairs

## Steps should:

- be 1.2m wide
- however short a flight, provide continuous handrails on both sides that extend 300mm beyond the top and bottom of a flight
- ensure handrails are no more that 1800 mm apart; 40mm – 45mm in diameter, if circular and 50mm if oval; and not cold to the touch
- ensure a handrail height between 900mm and 1000mm from the pitch line, and between 900mm - 1100mm from a landing
- have handrails that end with a 90° turn to the ground or an adjacent wall
- be slip resistant even when wet
- be well lit (200 lux minimum)
- provide corduroy tactile warning surfaces at the top and bottom of flights
- provide a level landing at the top and bottom of each flight, not less than 1200mm²
- ensure no more than 12 risers between landings
- incorporate tread nosings that are flush, 55mm wide, made from a permanent material that contrasts in colour and luminance with the standing and facing surfaces of all risers
- ensure tread nosings do not project more than 25mm, where they cannot be avoided
- otherwise comply with Part M to the Building Regulations, and, Guidance on the use of Tactile Paving Surfaces, Department for Transport 2007

**NB:** Stainless steel handrails must be avoided. They often become too cold to maintain a grip, exacerbate symptoms of arthritis for example, are slippery, particularly when wet, and do not contrast well against glass and other indistinct backgrounds. Alternatives include wood and coated steel handrails.

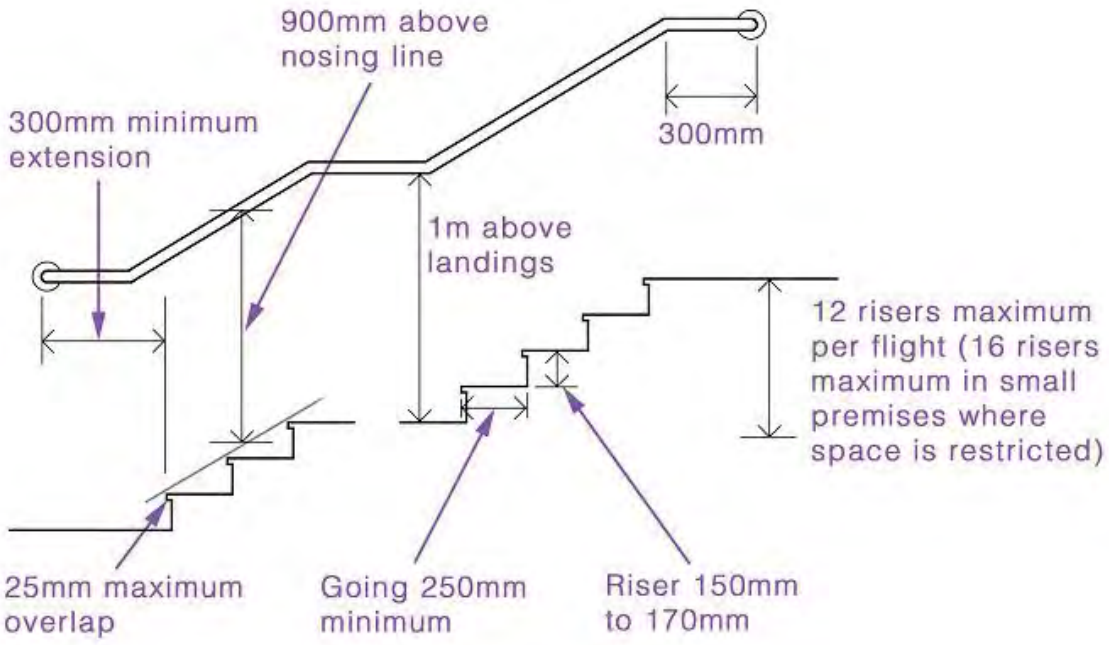


**NB:** A second lower handrail at 600mm above the pitch line, for use by people of short stature, should be considered.

## Accessible Parking

For many older and disabled people, the car remains an essential and irreplaceable means of mobility.

Hillingdon Council operates a Brown Badge scheme for borough residents aged 65 and over who have restricted mobility, but who do not meet the criteria for a Blue Badge.

When considering car parking provision for new developments, developers should take a design-led approach to ensure a suitable layout and number of car parking spaces, including a sufficient quantity for use by older and disabled people.

Parking provision for older and disabled people should be as below:

| **Minimum number of parking bays for use by older and disabled people** | |
|---|---|
| Brown Badge spaces | Blue Badge spaces |
| 5% of the total parking provision | 10% of the total parking provision designed to British Standard 8300: 2009 |

**NB:** Brown Badge parking provision is particularly important on large scale retail developments. On other developments, the Council will invoke its discretion where a Design & Access Statement supporting a development application can demonstrate that the above percentages would amount to over provision and regular under occupation of the accessible parking bays.

When designing new developments, or making alterations to existing buildings, planning applicants must incorporate accessible parking for Blue Badge and Brown Badge holders wherever parking provision is proposed.

Planning applicants must therefore:

- demonstrate where and how many accessible parking spaces will be provided
- identify within an Access Statement where Blue Badge holders might park and easily access the development, if no off-street parking is proposed
- provide a setting down point close to the entrance for door-to-door transport vehicles, as appropriate (under cover seating should be considered at pick up points)

# Blue Badge and Brown Badge Parking

In all off-street non-residential car parks, spaces for Blue Badge and Brown Badge holders should:

1. be visible or signposted from the car park entrance
2. be provided as close as possible, but within 50m of the facilities to which they serve
3. in multi-storey car parks, be on a level(s) close to a wheelchair accessible lift to minimise walking
4. be located to allow access to a ticket machine with easy to use controls, slots and dispensers (further details are given in BS 8300)
5. measure 2400mm x 4800mm with a shared 1200mm shared transfer zone
6. be clearly marked with the international wheelchair symbol on the ground and on a signpost at eye level, and otherwise designed and marked in accordance with BS 8300 (Blue Badge bays only)
7. be close to level and clearly identifiable pedestrian routes
8. be monitored for abuse and display penalty-warning notices for motorists not displaying a Blue Badge or Brown Badge

**NB:** To make the route more manageable by disabled people, if accessible bay(s) cannot be near to facilities served by the car park, a covered pedestrian walkway, seating along the route and good signage should be provided.

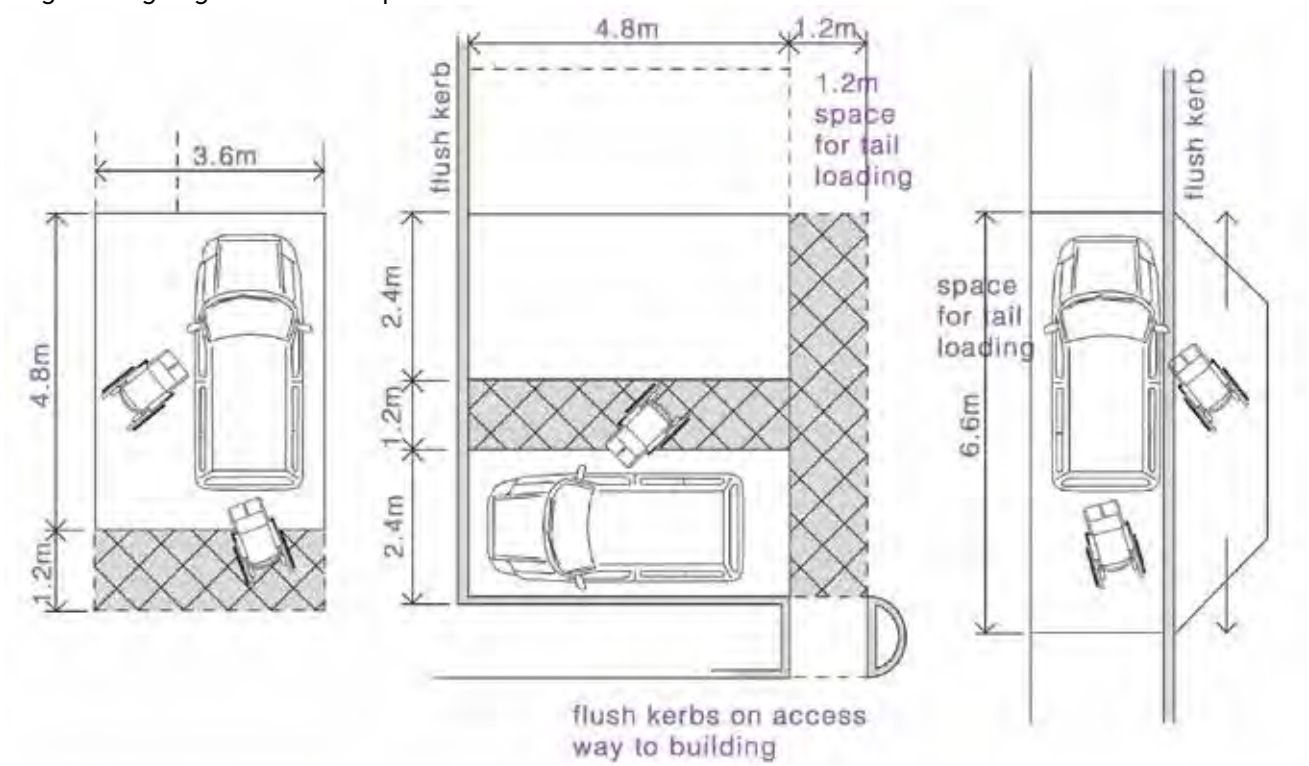

## Entrances

Entrances to new buildings should:

- be easy to identify without excessive signage
- be integral to an approach route that is level at all entrances and exits (maximum threshold upstand 10mm, chamfered or rounded)
- be unobstructed and well lit
- ensure glazed entrances and windows are marked for safety and visibility from 850 - 1000mm and 1400 - 1600mm above the finished floor level. A minimum 10% of glazed areas should be permanently marked (manifestation) with lettering, company logos, etc
- ensure the height of any door entry system is suitable for wheelchair users, and has a camera to facilitate access by people with hearing or speech impairments

## Entrance doors

Doors leading into and out of buildings should be easy to open by people with limited manual dexterity or strength, those with a pram or pushchair, and they should be easy to negotiate by wheelchair users. To ensure a good standard of access:

- automatic sliding doors should be used in preference to other types of opening. To minimise heat loss, two sets of automatic doors within a drum should be considered
- swing doors should have an unobstructed space of at least 300mm adjacent to the latch side of a door (leading edge)
- if automatic swing doors are essential, the swing area should be protected by guard rails to require a head-on approach
- revolving doors should be avoided. If used, an adjacent pass door should be provided and kept unlocked during opening hours
- manually operated doors should require an opening force no greater than 25 Newtons at the leading edge
- door handles should be easy to grip and contrast in colour to the door (minimum Light Reflectance Value)

**NB:** Stainless steel doors and handles provide poor contrast against glass and should be avoided.

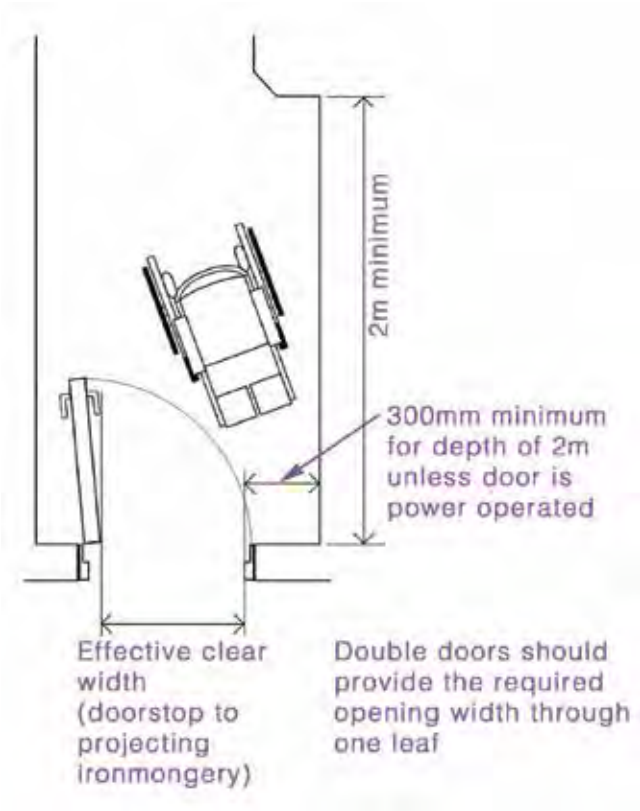

## Lobbies

Lobbies should be sized to allow wheelchair users to move clear of one door before negotiating a second. The minimum length of a lobby is related to the door size and swing direction.

Further detail is given in Approved Document M of the Building Regulations, however, in general 1570 mm of clear space should be provided between door swing areas.

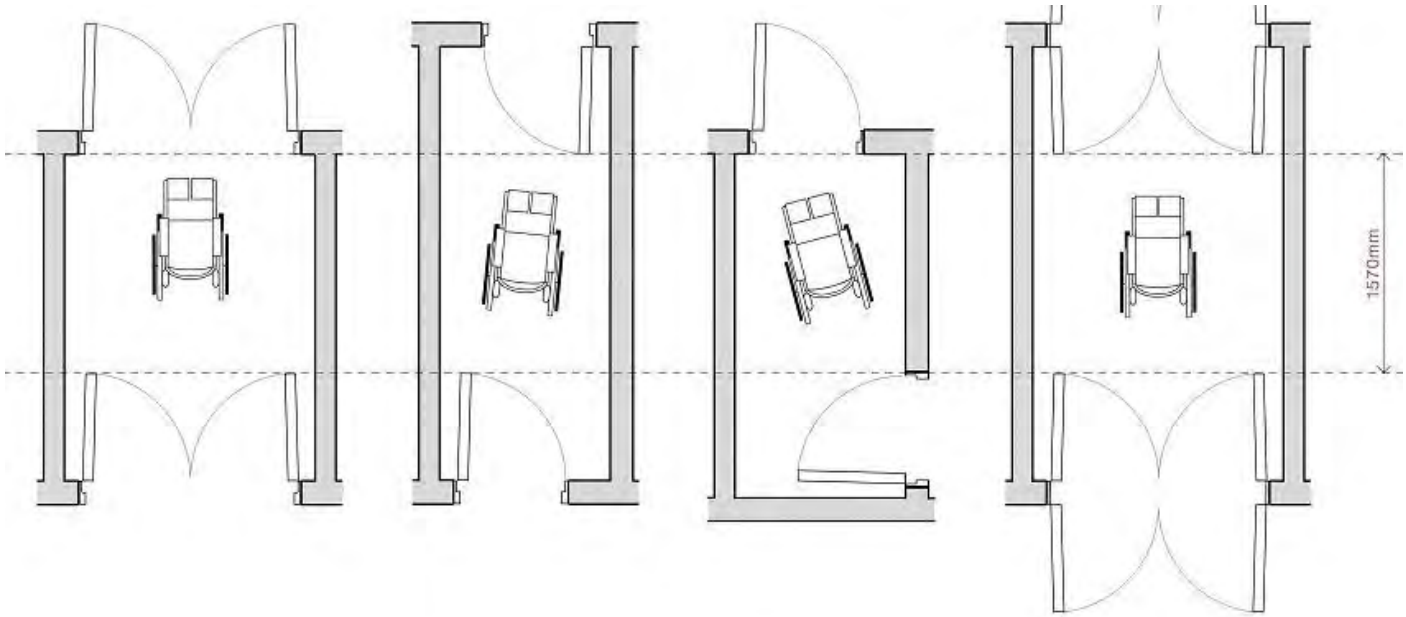


## Reception Areas

Reception areas and entrance halls should be easily accessible and convenient to use, and should ensure:

- counters and reception desks allow wheelchair access to the visitor and staff side, and are designed to make communication easy for those lip reading, using sign language or hearing aids
- an induction loop is provided at all reception desks
- routes from the reception area to stairs, lifts and WCs are clearly defined, unobstructed and well signed

## Internal Doors and Corridors

Internal doors in new buildings should open beyond 90 degrees and have a minimum clear opening width of 800mm in accordance with BS 8300.

Doors should:

- where fitted with self-closing devices accord with BS 8300 (also see page 70)
- have an unobstructed space of at least 300mm adjacent to the leading edge of the door on the pull side
- be held open along circulation routes by electro-magnetic devices linked to the fire alarm system
- feature a vision panel between 500mm and1500mm from the floor level (see BS8300 for detailed guidance) along circulation routes and preferably elsewhere (except where privacy is required)

**NB:** Corridors should have an unobstructed width of 1800mm. Where the width is less than 1800mm, passing places should be provided at reasonable intervals.

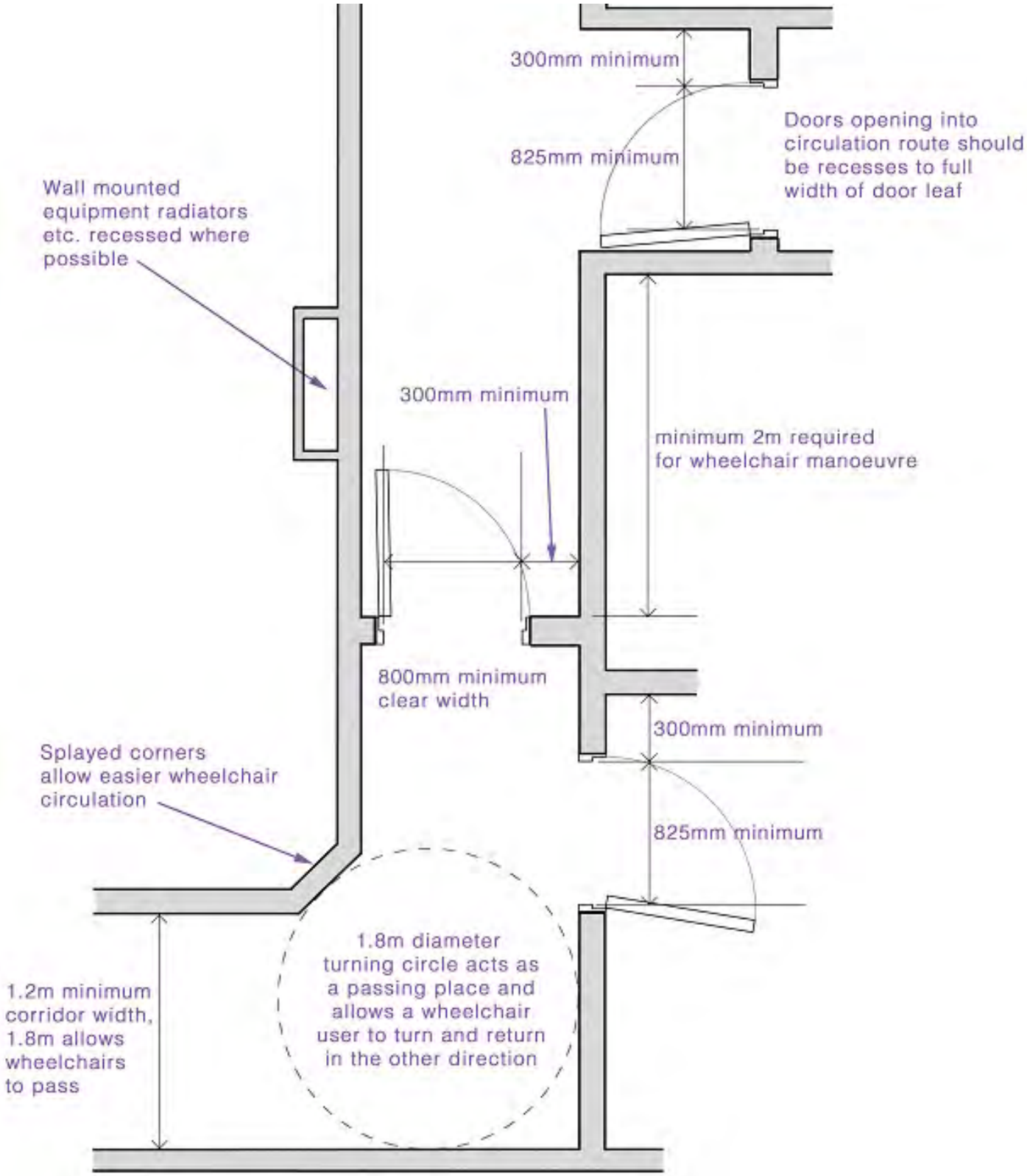
300mm minimum
Doors opening into circulation route should be recesses to full width of door leaf
825mm minimum
Wall mounted equipment radiators etc. recessed where possible
300mm minimum
minimum 2m required for wheelchair manoeuvre
800mm minimum clear width
300mm minimum
Splayed corners allow easier wheelchair circulation
825mm minimum
1.8m diameter turning circle acts as a passing place and allows a wheelchair user to turn and return in the other direction
1.2m minimum corridor width, 1.8m allows wheelchairs to pass

# Vertical Circulation

## Lifts

A passenger lift should be provided in all new multi-storey developments. (See page 75.)

In existing buildings, a platform lift (which must be enclosed where lift travel exceeds 2000mm) may be acceptable.

## Platform Lifts

Platform lifts are an acceptable solution only in existing buildings and environments. They should be designed to allow independent use with clearly visible controls set at a height suitable for wheelchair users. Ideally they should be located adjacent to the stairs with which they are associated.

Platform lifts are restricted to a maximum travel distance of 2m where there is no lift enclosure and no floor penetration.

Where travel distance exceeds 2m there should be a lift enclosure. The platform size should be sufficient to accommodate large wheelchairs.

**NB:** Although a wheelchair stairlift may provide an acceptable solution in some existing buildings, they must not be used in new buildings.

Wheelchair stairlifts should not be used in external environments or as a sole means of access into a building.

## Passenger Lifts

The size and number of lifts should cater for the anticipated number of people likely to use a building. Lifts should provide:

- minimum internal dimensions of 1100mm wide by 1400mm deep
- increased internal dimensions of 2000mm by 1400mm where a high volume of people is anticipated
- a minimum clear opening door width of 800mm
- an area of at least 1500x1500mm in front of the door on every landing, including ground floor level
- clearly distinguishable controls with tactile information, between 900mm and 1100mm above floor level
- all specifications in accordance with Approved Document M of the Building Regulations

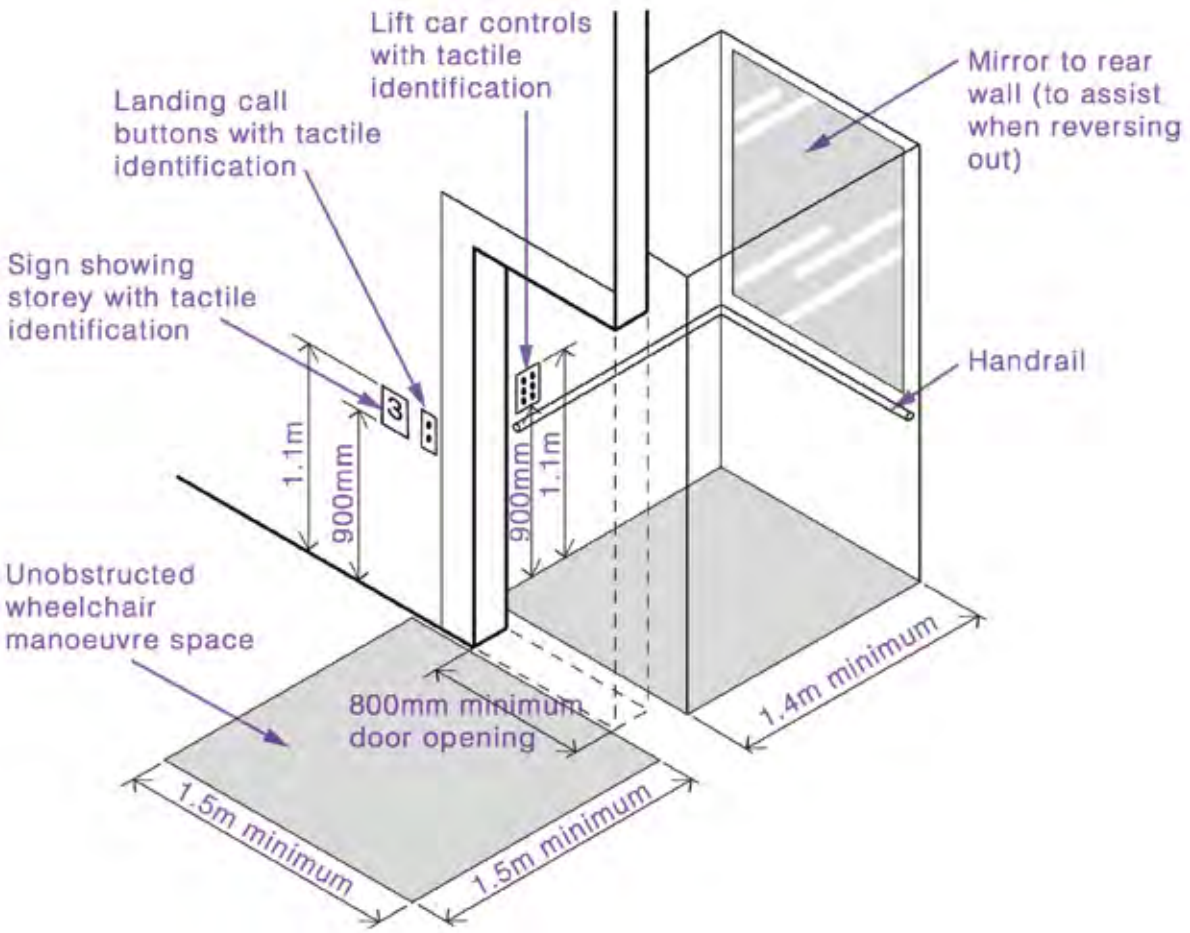

# Internal Stairs

Stairs should have:

- a minimum level surface width of 1200mm, with the width between handrails not less than 1000mm
- a level landing at the top and bottom of each flight across the width of the stair and at least 1200mm long
- no more than 12 risers between landings, but exceptionally no more then 16 risers in a small premises where the floor area is restricted
- risers that are not open, between 150mm and 170mm in height, with a going of at least 250mm, and the same dimensions throughout a flight or series of flights
- a handrail height between 900mm and 1000mm from the pitch line, and between 900mm and 1100mm from a landing
- handrails that end with a 90° turn to the ground or an adjacent wall
- tread nosings that are flush, 55mm wide, made from a permanent material that contrasts in colour and luminance with the standing and facing surfaces of all risers

**NB:** Internal stairs should comply with Part M to the Building Regulations. (See also page 63-64 on steps.)

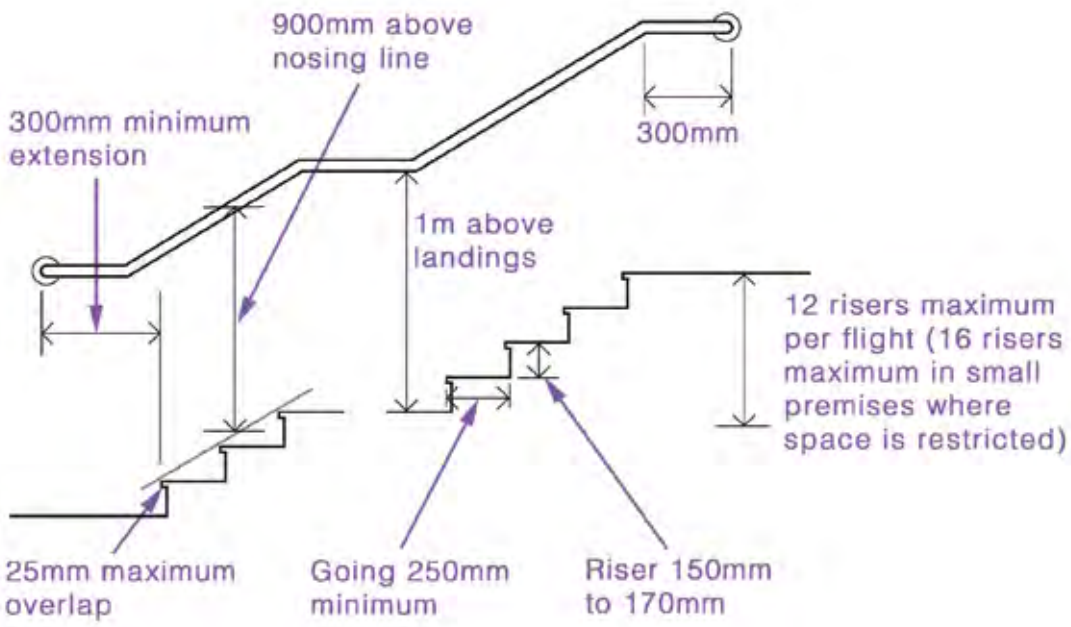

# Toilets and Changing Facilities

Toilet facilities should be easy and convenient to use by everyone. They should:

- be accessible to wheelchair users in accordance with BS 8300 and signed 'Unisex Accessible'
- not feature baby changing facilities within accessible cubicles (baby changing facilities should be provided elsewhere and not in areas kept for disabled people)
- make provision for at least one wheelchair accessible toilet in a building for use by customers, visitors and staff
- where only one toilet is provided in a building, be wheelchair accessible
- have minimum internal dimensions of 2200mm x 1700mm and be otherwise designed and fitted in accordance with BS 8300
- where more than one unisex compartment is proposed, have layouts which allow right and left-hand transfer from a wheelchair
- in separate sex toilet blocks, feature a larger cubicle for ambulant disabled people in accordance with BS 8300
- be no more than 40m away at any given point in a building. Where a platform lift is used vertical travel to toilet accommodation is limited to one storey

Additional good practice guidance:

- automatic sliding or bi-folding doors may be considered where space is limited
- the flushing mechanism should be positioned on the open or transfer side of the WC pan
- coat hooks should be fitted at 1200mm and 1800mm above floor level on back of door
- there should be good use of colour and/or tonal contrast, e.g. fittings, with wall tiles and floor surfaces
- the basin tap should ideally be a mixer tap with a lever handle, located on the side nearest the WC
- it should be possible to reach the basin, tap(s), toilet paper, paper towels whilst seated on the WC

**NB:** Accessible WCs should not feature a baby changing facility. The compartment should be kept free for use by disabled people, with separate baby changing facilities provided in a location that is accessible to male and female carers.

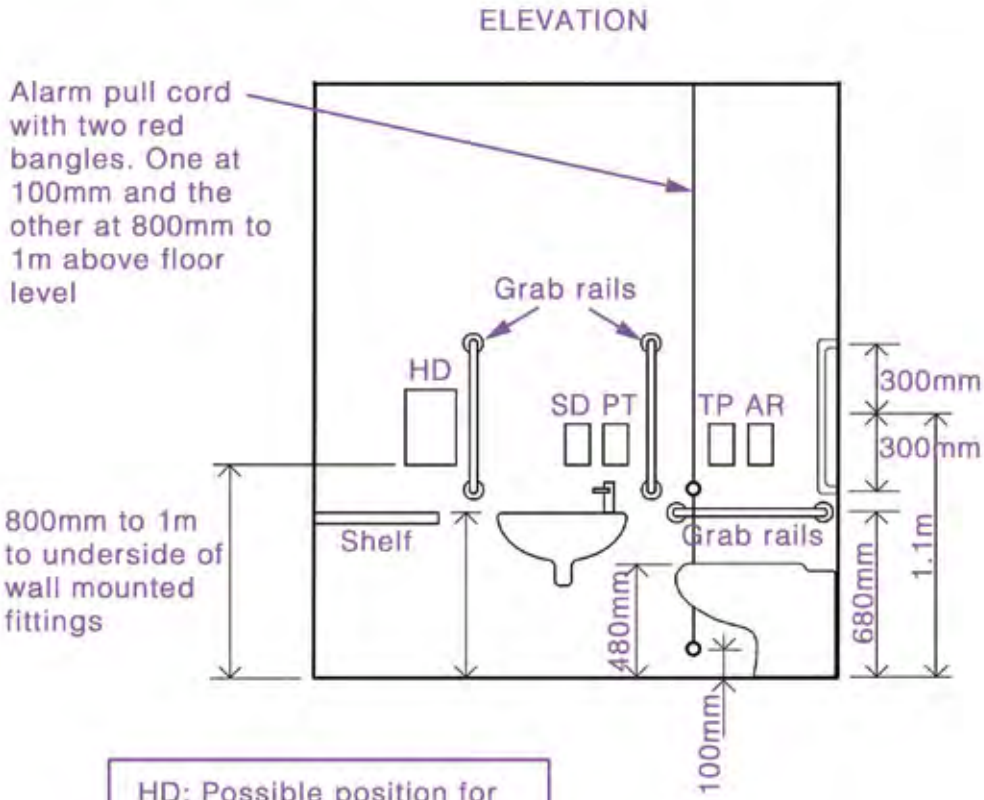


HD: Possible position for automatic hand dryer
SD: Soap dispenser
PT: Paper towel dispenser
AR: Alarm reset button
TP: Toilet paper dispenser

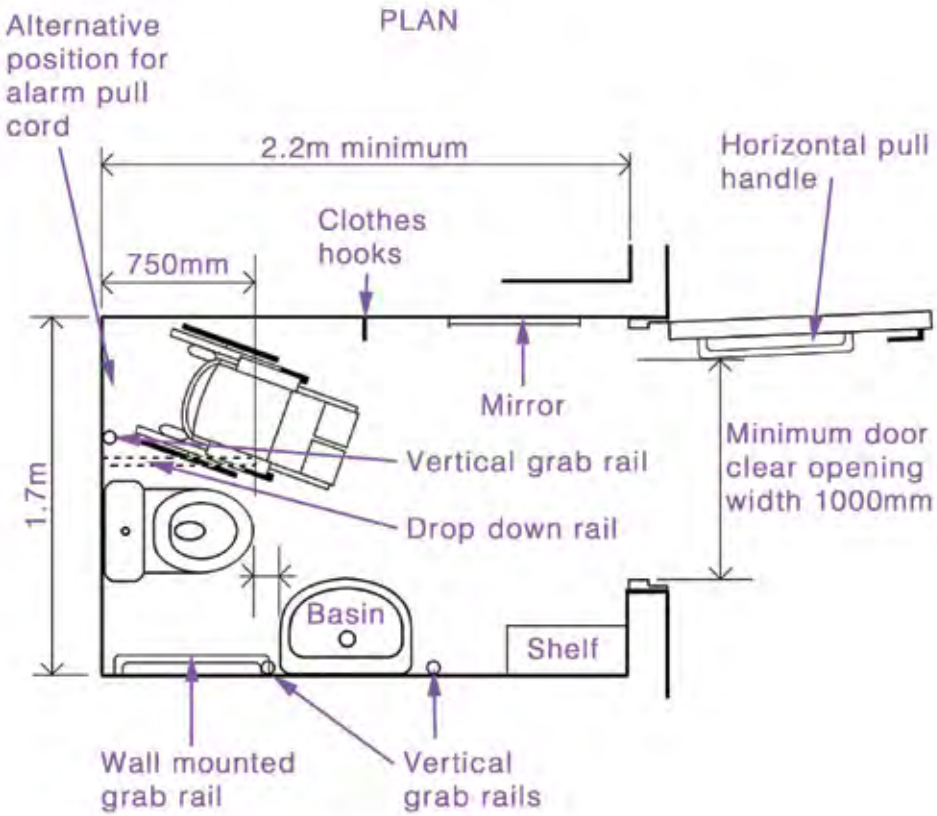

## Changing Facilities

Changing facilities provided for use by customers or visitors or by people working in a building, should be designed to be accessible. It is optional to provide a separate self-contained wheelchair accessible changing room or one that provides full access within a general facility.

## Changing Places Toilets

Standard accessible toilets do not meet the needs of all disabled people. Changing Places toilets provide extra features and more space to meet particular needs.

In line with BS 8300:2009+A1:2010 and the Department for Communities and Local Government (DCLG) strategic guidance 'Improving Public Access to Better Quality Toilets', the Council may require a Changing Places facility in key developments, including:

- major transport termini or interchanges, e.g. large railway stations, airports and motorway services
- sport and leisure facilities, including large hotels
- cultural centres, such as museums, concert halls and art galleries, stadia and large auditoria
- shopping centres and shopmobility centres
- key buildings within town centres, e.g. main public libraries
- educational establishments, Health facilities, such as hospitals, health centres and community practices

Each Changing Places toilet must provide a:

- height adjustable adult-sized changing bench
- tracking hoist system (or mobile hoist if this is not possible)
- space in the changing area adequate for a disabled person and up to two assistants
- screen or curtain to allow the disabled person and assistant(s) some privacy
- wide tear off paper roll to cover the bench
- large waste bin for disposable items
- non-slip floor

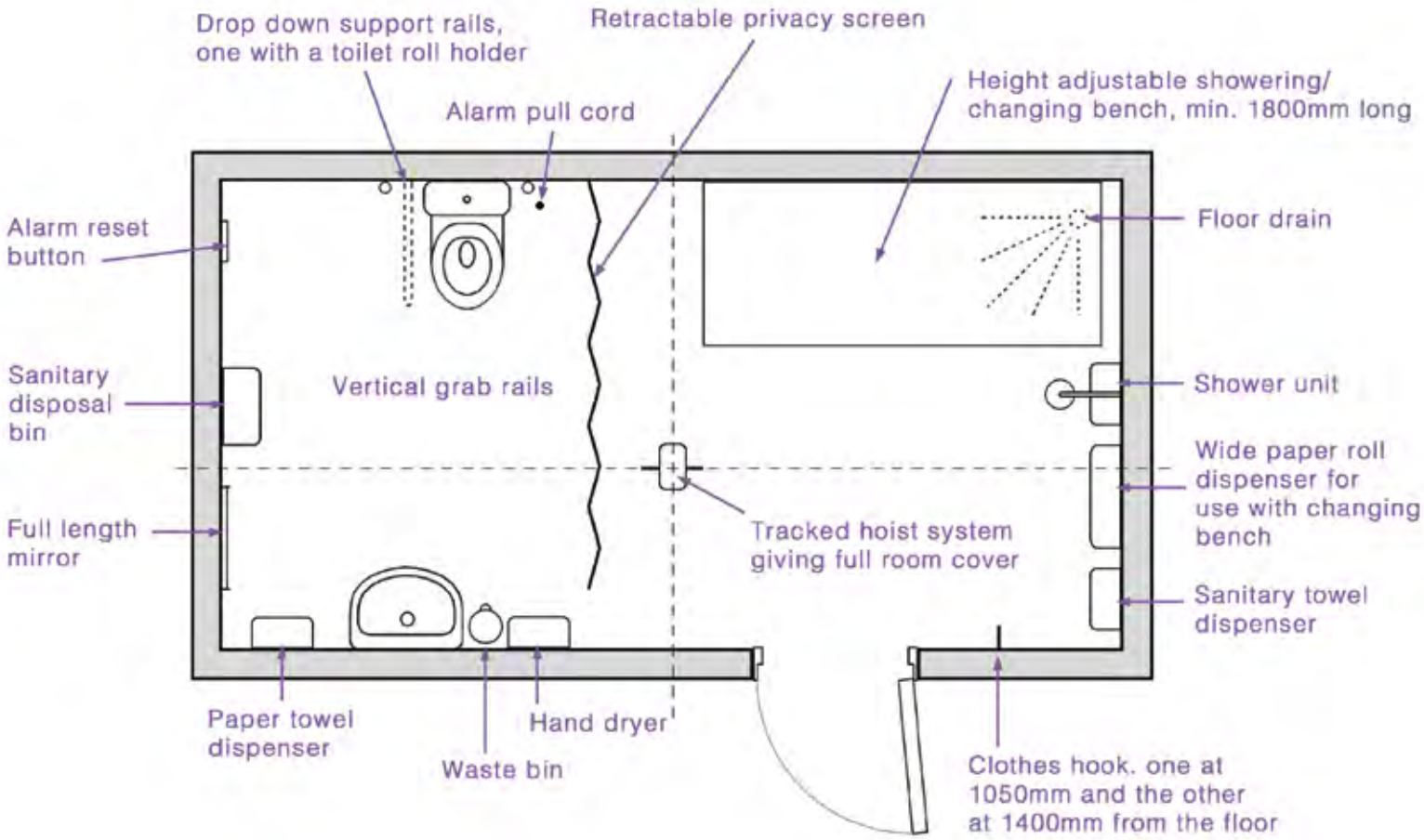
Drop down support rails, one with a toilet roll holder
Retractable privacy screen
Height adjustable showering/ changing bench, min. 1800mm long
Alarm pull cord
Alarm reset button
Floor drain
Sanitary disposal bin
Vertical grab rails
Shower unit
Wide paper roll dispenser for use with changing bench
Full length mirror
Tracked hoist system giving full room cover
Sanitary towel dispenser
Paper towel dispenser
Hand dryer
Waste bin
Clothes hook. one at 1050mm and the other at 1400mm from the floor

## Communication and Wayfinding

Building design should provide a logical and straightforward layout that enables people to move around an environment or building intuitively, without the need for excessive signs. Good use of lighting, colour and tonal contrasting, clear and appropriate signage, hearing enhancement systems and acoustics need careful consideration when designing buildings.

## Signage

The need for signs is minimised if a building is designed in a rational and simple manner. However, where signs are used they should be well placed, well lit and use clear, well contrasted, print. The use of symbols and tactile information will benefit many building users.

For further information, see the Sign Design Guide, a guide to inclusive signage, JMU Access Partnership and the Sign Design Society, 2004.

## Lighting

Good lighting is essential for visibility and strong definition of objects. It allows people to identify potential hazards more easily, e.g. changes of level. Light sources should be positioned to avoid glare, reflection and strong shadows to aid sign language and lip reading.
Other points to consider:

- a lighting strategy should take account of all building users including older, disabled, and visually impaired people
- buildings should be designed to make maximum use of natural light
- lighting should avoid creating glare and reflections, pools of bright light and stark shadows as these can mask hazards
- surfaces should have a non-reflective surface e.g. table tops, handrails
- lighting should be diffused, carefully positioned and not in the line of vision

## Hearing Enhancement Systems

Hearing enhancement systems are used to amplify sounds and eliminate extraneous background noise in rooms and areas for meetings, lectures, performances, film and spectator stadia, as well as service counters.

Induction loops or infrared systems enable a person to receive sound from a microphone directly to their hearing aid.

Infrared systems are virtually immune from florescent lighting and air conditioning interference and are undoubtedly the preferred option for confidential conversations.

**NB:** For further technical advice or guidance contact: Action on Hearing Loss

## Entry Phones

Entry phones should be designed and located to be used by wheelchair users and other people with hearing and visual impairments.

They should:

- feature a camera and video screen to facilitate two-way visual dialogues
- be no higher than 1200mm from the floor

## Alarms

Alarm systems should take into account the needs of people with hearing impairments through flashing beacons, and/or in large or complex environments, linked to a dedicated paging system.

## Storage Facilities

Storage cupboards, shelves and lockers should be designed to allow their easy use by disabled people, including wheelchair users. Consideration should be given to height and keeping the need for fine manual dexterity to a minimum.

## Refreshment Areas

Restaurants and cafeterias should be accessible with split-level areas linked with ramps, adequate circulation space, a choice of wheelchair seating locations and accessible self-service facilities.

## Controls and equipment

All controls, switches, and sockets should be easy to operate, and at a constant height and location throughout a building.

Card and coin operated devices (such as automatic teller machines (ATMs) and vending machines) should be designed and located to allow easy, independent use.

They should:

- positioned so that display screens can be seen from a wheelchair height
- feature buttons that are well spaced, colour contrasted and tactile characters
- be no higher than 1300mm (preferably 1200mm)
- a clear level area of 2000mm x 2000mm in front of a machine

## Means of Escape

Safe, efficient egress depends upon a combination of building design and management procedures. A well-designed, accessible building should allow independent egress for all building users and should:

- feature (in multi-storey buildings) at least one fire rated evacuation lift within a refuge area. The lift(s) should be designed and integrated to support Horizontal Evacuation and:

  i. must be clearly identifiable and have appropriate signage

  ii. should be situated within a protected enclosure

  iii. should consist of lift-well and protected lobby at every level

  iv. should be provided with a switch marked "Evacuation Lift" at Exit level. (This switch should cause the lift to return to the final exit & then become controllable.) Alternatively, the lift could be interfaced to the fire alarm system, returning to ground when the alarm sounds

  v. must feature an exclusive primary electricity supply from a sub-main circuit

  vi. must have alternative back-up power that should start automatically in an emergency to prevent potential interruption to the electricity supply. The cables should be separate from those of the primary supply and routed through an area of low fire risk (one hour minimum fire protection)

  vii. both the main and alternative power supplies must have independent isolators that are clearly identifiable. The isolators should be clearly labelled to include the location of the other power supply

  viii. must connect to any electrical sub-station, distribution board, generator, hydraulic pump or other apparatus that is fire protected for a period not less than that of the lift shaft

  ix. have a minimum load capacity of not less than 400kg

  x. should have doors that have a minimum of 30 minutes fire resistance

- ensure a minimum sized refuge of 900mm x 1400mm on every floor (refuges should be clearly sign posted and their purpose made known)

- provide an Emergency Voice Communication System (EVC), in compliance with BS5839-9 2011 in all refuge areas and in various locations throughout a building

- provide a video surveillance for all refuge areas

- ensure emergency lighting in accordance with BS 5266-1:2016

- ensure exit doors provide a level threshold and open on to a suitable level area

- refer to BS9999:2017, and Approved Document B of the Building Regulations

**NB:** Manual methods of evacuation (e.g. EVAC chairs) should be avoided. They are slow, typically cumbersome, and rely on a non-disabled person prolonging their stay in a building that is potentially dangerous.

# A1 Retail (includes Supermarkets)

**Counters and Checkouts**

- counters should be accessible to wheelchair users as staff and customers
- shop checkouts should allow wheelchair access and at least one in every shop should be 900mm wide
- the maximum height of counters, desks, and shop checkouts should at least in part, be a maximum of 850mm to allow easy use by people in wheelchairs
- till displays should be positioned at a height suitable for wheelchair users and the installations of induction loops may also be appropriate

**Aisles and Shelves**

- there should be sufficient space between display shelves for a wheelchair user to turn. Aisles should have a minimum width of 850mm, or 1200mm in supermarkets
- wherever practicable, shelving should be positioned where disabled people can reach it independently. The most accessible shelf heights to reach from a seated position are between 665mm and 1160mm above floor level
- in retail stores with changing facilities, at least one changing room should be designed to be suitable for an ambulant disabled person or a wheelchair user plus assistant and have a minimum floor area of 1.5m x 1.5m

# Shopfronts

New shopfronts should be accessible to disabled people. Changes of level at entrances should be avoided, but where unavoidable, a ramp should be provided in accordance with the guidance in this document. In the case of existing buildings, particularly where a new shop front is proposed, the following guidance should be followed:

- shops that have a change in level of under 180mm from pavement to shop floor surface can usually incorporate ramped access into or within the shop. Exceptions preventing a ramped area to be created may include the presence of structural beams, floor slabs, socket outlets and basement lights
- entrance doors should be accessible to all particularly wheelchair users and people with limited manual dexterity. A minimum effective clear width of 1000mm in new buildings and 800mm in existing buildings should be achieved where a new shop front or alterations to a shop front are proposed.

**NB:** Further detail and design guidance is given in the 'Entrances' section of this document and in the Hillingdon Design and Accessibility Statement (HDAS) Shop fronts SPD.

## A3 Food and Drink

- restaurants, cafeterias and bars should be designed to be accessible. Any split-level areas should be linked by ramps, with adequate circulation space a choice of wheelchair seating locations and wheelchair accessible self-service facilities provided

- entrances should be designed to allow easy access for wheelchair users and ambulant disabled people, (see guidance on 'Entrances' Pages 59-60)

- bars and self-service facilities should provide continuous counter suitable for wheelchair users, preferably 850mm high

- fixed seating should be avoided

**NB:** All public areas, including WC accommodation, public telephones and external terraces should be accessible and designed in accordance with guidance in this document.

## Sports and Leisure Venues

- facilities should be provided at sports and leisure venues to allow disabled people to participate in all the available activities as spectators, participants and members of staff

- disabled people should have access to the full range of seating options and be able to sit alongside disabled or other companions. Routes should be accessible and handrails always provided to ramps and steps. Where turnstiles are installed, a by-pass gate of 800mm should be provided for wheelchair users and ambulant disabled people

- spectator seating should be in line with the guidance given in 'cinemas, theatres and other places of assembly'. (See page 76)

- toilets, bars and other facilities within the building should also be fully accessible. Changing room facilities should be provided in accordance with the guidance given on pages 66-69

- induction loops, infrared systems or other suitable communication devices should be provided where appropriate

- a 'Changing Places' facility should be provided to allow people with complex personal care requirements to participate equally

- a hoist or ramp should be provided to facilitate access to swimming pools

Detailed guidance on the design of sports facilities is given in Accessible Sports Facilities, Sport England 2010 (download from www.sportengland.org)

## Cinemas, Theatres and Other Places of Assembly

All assembly areas should allow access and use by disabled people as members of an audience, participants and members of staff. Disabled people should have access to the full range of seating options and be able to sit alongside disabled or other companions.

To be accessible, spectator seating should:

- provide a wheelchair space for every fifty seats provided and, in some areas, two wheelchair spaces side by side
- provide clear visibility lines for wheelchair users without obstructing the view of others
- otherwise accord with BS 8300
- accord with Document M of Building Regulations.

Box office counters should be accessible for wheelchair users and other disabled people, (see Page 74 for guidance on counter design).

## Hotels, Motels and Student Accommodation

In all building types, (including hotels, motels, nursing and residential homes, university and college halls of residence, and relatives accommodation in hospitals), a proportion of sleeping accommodation should be designed for use by disabled people.

In accordance with London Plan policy 4.5, an Accessibility Management Plan that demonstrates the highest standards of accessibility and inclusion should accompany development applications proposing visitor accommodation.

Accessible accommodation should:

- be located close to lifts on upper floors and close to reception on the ground floor
- be located along accessible routes
- be situated so that they have equal access to views enjoyed from standard bedrooms
- feature an en-suite bathroom
- cater for a wide range of disabilities
- provide some rooms with a connecting door to an adjoining room for use by someone assisting
- allow manoeuvring space for a mobile hoist (where ceiling hoists are not installed)
- ensure walls are capable of supporting the required fittings, e.g. grab rails and drop down support rails.In line with BS 8300:2009, the total number of accessible rooms as a percentage should be

- 5% without a fixed tracked-hoist system

- 5% with a fixed tacked-hoist system (or similar system giving the same degree of convenience and safety)

- 5% capable of being adapted in the future to accessible rooms

Overnight accommodation should ensure a mixture of bathtub and continental style level access shower (Wet Room) en-suite rooms.

**NB:** The requirements for accessible accommodation applies to new build, conversions and refurbishments. Reference should be made to all relevant sections of this document and compliance with BS 8300:2009 is also required.

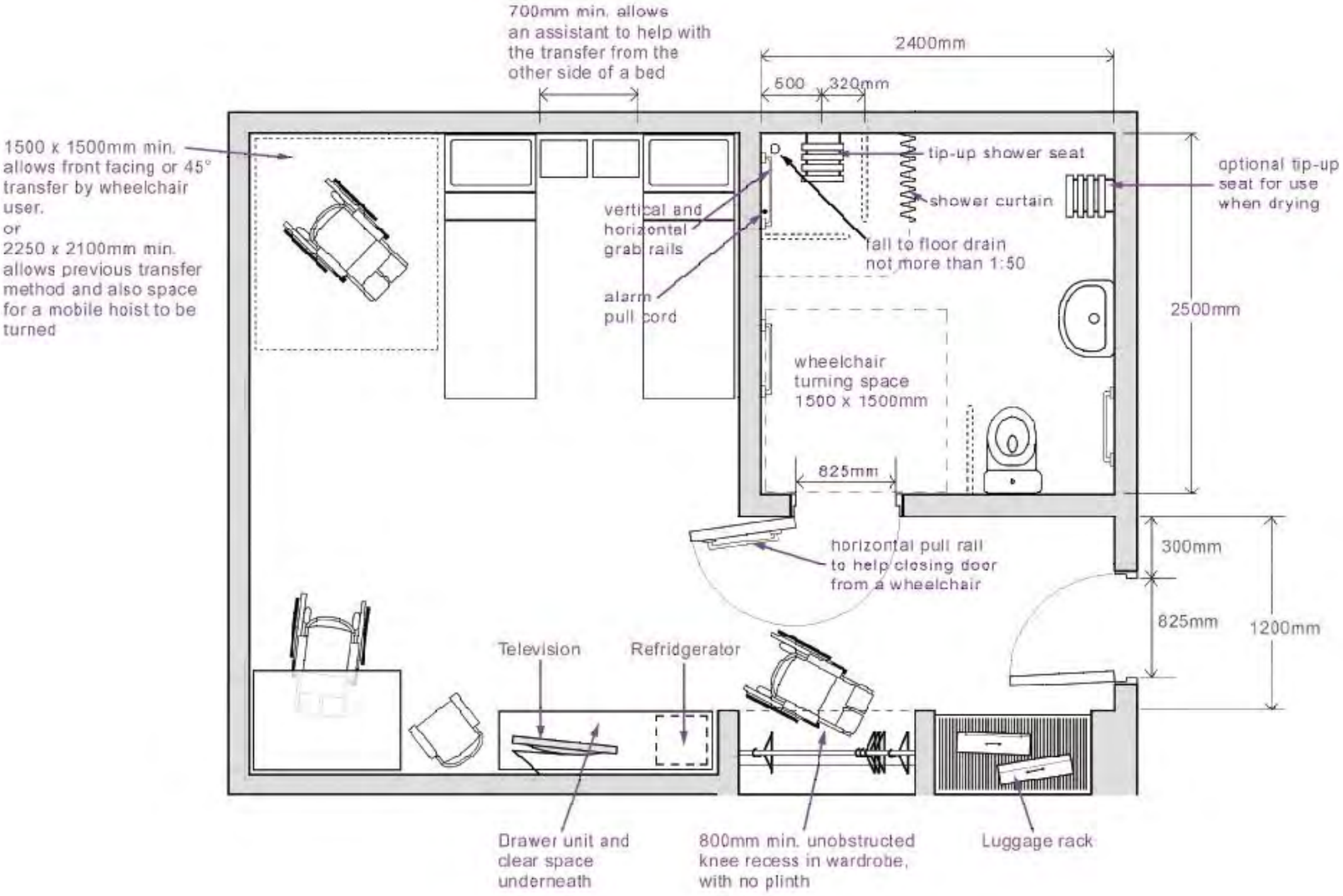
700mm min. allows an assistant to help with the transfer from the other side of a bed
2400mm
500
320mm
1500 x 1500mm min. allows front facing or 45° transfer by wheelchair user.
or
2250 x 2100mm min. allows previous transfer method and also space for a mobile hoist to be turned
tip-up shower seat
shower curtain
optional tip-up seat for use when drying
vertical and horizontal grab rails
fall to floor drain not more than 1:50
alarm pull cord
2500mm
wheelchair turning space 1500 x 1500mm
825mm
horizontal pull rail to help closing door from a wheelchair
300mm
825mm
1200mm
Television
Refridgerator
Drawer unit and clear space underneath
800mm min. unobstructed knee recess in wardrobe, with no plinth
Luggage rack

## Educational and Cultural Buildings

Educational and social interaction is fundamental to the learning and development of everyone. In recent years, disabled people have been empowered to learn and be part of a total education system where the environment is barrier free and discrimination eliminated.

All learning establishments, ranging from nurseries to universities, should follow the guidance of BS 8300 and should:

- provide a level of gently sloping approach and step free access to all buildings via a common entrance
- promote barrier free movement to and around all areas; including all classrooms, lecture theatres, refectory and student accommodation
- allow students to participate inclusively through assistive technology and built-in flexibility to support those with diverse access needs, e.g. height adjustable work-benches, hearing enhancement systems
- ensure a building is designed to encourage social interaction by all students, including refreshment, and quiet study places and recreational areas
- provide soundproof study areas e.g. in the library, to allow people with a visual impairment to work with an assistant reading aloud

**NB:** In accordance with BS 9999, the Council will expect all development proposals to include a comprehensive fire emergency plan that demonstrates how disabled people will be safeguarded from fire and enabled to evacuate independently.

## Conservation and Historic Buildings

There are particular issues that should be considered when applying the guidance in this document to historic buildings, Conservation Areas and in Areas of Special Local Character.

In most cases it is possible to reconcile the interests of conservation and achieve suitable access for disabled people without compromising the special architectural interest of a building or area. Where there is a conflict between conservation and access, the Access Statement can be used to explain why a generic solution is impracticable or undesirable, and propose a bespoke solution or means of substituting physical access. The Access Statement should also detail any consultation taken with local access groups, access and conservation officers, or other bodies such as English Heritage.

**NB:** See also Planning Policy Guidance Note 15 Planning and Historic Environment and Easy Access to Historic Properties. Importantly, heritage assets must not be unduly compromised by access improvements.

## Access to Parks and Open Spaces

Access to parks, open spaces and countryside should ensure:

- physical access for everyone including wheelchair users, free from barriers, e.g. stiles
- appropriate surfaces and gradients where provided
- adequate seating along extended walking routes
- facilities such as toilets, picnic tables and observation hides are accessible
- gates can be used by wheelchair users
- signs are located to be visible, appropriate (not used excessively) and easily understood
- good information using clear print guidelines and as appropriate, available in alternative formats

**NB:** For further information see 'A Good Practice Guide to Disabled People's Access in the Countryside'; 'Easy Access to Historic Landscapes, English Heritage, 2005'' visit: www.english-heritage.org.uk/. Also, see the Mayor of London's SPG on 'Shaping Neighbourhoods Play and Informal Recreation', September 2012.

# Design and Access Statements

## What an Access Statement should include

### For Minor and Major Planning Applications

To include all new dwellings, including conversions to flats (except householder application). The statement should:

- explain how the proposal complies with local development policies
- explain how issues affecting public access to and within the proposed building or space, such as entrances, horizontal/vertical circulation, WC's and emergency escape, etc, are addressed
- demonstrate precisely how the proposal meets the specifications of M4(2) and M4(3) (as relevant) Optional Technical Standards defined in Approved Document M to the Building Regulations

### For Major Planning Applications

The purpose of the Access Statement is to outline how a project has been designed to deliver an inclusive environment for all to use. The statement should:

- explain the philosophy and approach to inclusive design, including how the design has come about and what it hopes to achieve
- list the planning sources of advice and technical guidance used, as well as pre-planning consultations, e.g. with the Council's Access Officer
- provide details of any professional advice such as access audits or design appraisals
- where the design deviates from recognised sources of good practice, demonstrate why and what alternative features are included to achieve access and inclusion
- give details of all management and maintenance practices necessary to ensure the building and/or space remains accessible throughout its lifetime
- in the case of existing buildings, particularly Listed Buildings and those in Conservation Areas, identify the constraints imposed by the existing structure and to propose compensatory measures where full accessibility proves to be impracticable or unreasonable

## What an Access Statement should include

**The statement should demonstrate how the following issues have been addressed in an inclusive manner:**

- approaches to and around the site, including transport links, car parking, setting down points, and the location of dropped kerbs
- all entrances, including visibility
- general horizontal/vertical circulation and layout arrangements
- appropriate use of surface materials
- facilities within the building, including WC provision
- way-finding and signage
- reliable and independent means of escape for those unable to use stairs
- developers of residential schemes will need to include details demonstrating that the development complies with accessible housing standards as set out in Part M to the Building Regulations

More detailed advice on Design & Access Statements can be found on the Council's website: www.hillingdon.gov.uk

The applicant would also be advised at this stage to consider the implications of the Equality Act 2010 when designing the scheme: to ensure the proposal and its management work within the spirit of the Act and mitigate against any challenges. Useful references include:

- BS 8300:2009 'Design of buildings and their approaches to meet the needs of disabled people' – Code of Practice (BSI)
- Inclusive Mobility - A Guide to best practice on Access to Pedestrian and Transport infrastructure, 2002 (Dept for Transport)
- BS 9999:2017 'Code of practice for fire safety in the design, management and use of buildings'
- English Heritage – 'Easy Access to Historic Buildings' June 2015
- Accessible Sports Facilities, Sport England 2010

# Design and Access Statements
# Examples of a Design and Access Statement

The content of an Access Statement will depend upon the size, nature and complexity of the proposed development. The following examples illustrate this.

## 1. Application for an extension to a Restaurant

**Proposal:** This application is for an extension to the side of a restaurant. The proposal includes a new entrance and the re-location and improvement of the existing sub-standard wheelchair accessible WC.

- the additional new entrance will be step-free. (Currently access can only be gained via a flight of three steps at the front of the restaurant). Access to this entrance will be via a slight slope with an approximate 1:30 gradient. This pathway surface will be slip resistant
- the new double entrance doors achieve a total width of 1700mm – as such suitable for wheelchair users. The doors will be fully glazed – as such there will be permanent and visible manifestation to comply with Part M of the Building Regulations
- the new entrance will be well lit and there will be good directional signage from the front main entrance and from the car park
- a new wheelchair accessible WC is proposed – it will comply with Part M of the Building Regulations in terms of size and layout, e.g. 2200mm x 1500mm. Access to it will include a new 1200mm wide corridor

Sources of Reference: HDAS: Accessible Hillingdon; Good Loo Guide, Centre for Accessible Environments and Council's Access Officer

## 2. Application for an extension to a Restaurant in a Public House

This application is for a small extension to a PH. The proposed extension will include a wheelchair accessible WC as well as additional floor space for the PH. Current access to the PH is unaffected (it does provide level access) and the proposed wheelchair accessible WC will comply to the standards in Part M of the Building Regulations.

## 3. Application for a new shopfront and internal alterations

**Proposal and background:** This application is for a new shopfront together with internal alterations to the shop – internally ramping the area around the entrance and the provision of a new lift to the lower ground sales floor

- currently this large chain store can only be accessed via a large step and narrow doorway. In addition, the existing two sales floors only provide stepped access between each floor
- the new shopfront will create a level threshold at the entrance and will comply with planning requirements, as well as the Council's 'Accessible Hillingdon', Supplementary Planning Document
- an automatic sliding door will provide easy entry for everyone
- the area beyond the entrance level landing will gently slope at a gradient of 1:25 up to the ground floor sales area. The 1:25 gradient does not require handrails as the slope is shallower than 1:20
- a new 8 person size lift (1.1m x1.4m) will provide a step free access route to the lower ground sales floor

**Sources of reference:**

- Hillingdon Design and Statement
- Accessible Hillingdon
- Part M of the Building Regulations
- Council Access Officer (Planning & Community Services

Further guidance and advice may be obtained at: www.pas.gov.uk/pas/aio/36888

# Appendix 1 - Relevant Policies

**UNITARY DEVELOPMENT PLAN – SAVED POLICIES (SEPTEMBER 2007)**

A 27th September 2012 Cabinet report on the Local Plan recommended that the Council should adopt Part 1, and agree that the majority of the UDP Saved Policies 2007 should, for the present, serve as Part 2 of the Local Plan – until a new Part 2 (incorporating detailed development management policies) can be prepared and brought forward.

**HILLINGDON LOCAL PLAN: PART 1 – STRATEGIC POLICIES (FORMER CORE STRATEGY) – LONDON BOROUGH OF HILLINGDON, NOVEMBER 2012**

Part 1 has an overarching strategic objective at its beginning:
Strategic Objective SO6: Promote social inclusion through equality of opportunity and equality of access to social, educational, health, employment, recreational, green space and cultural facilities for all in the borough, particularly for residents living in areas of identified need.

Topic sections and policies then follow, in particular regarding accessibility at paragraphs 7.13-7.15:

**7.14** The Council will seek to provide robust neighbourhoods which are attractive and capable of being used for many purposes, by different people and with the potential for change and adaptation. The Borough recognises that 15% of the population have an impairment, mobility or otherwise, and provision should be made to allow equal, easy and dignified access to buildings, places and spaces. Furthermore, the Council recognises that neighbourhoods should ensure adequate accessibility to housing, employment and public amenities to permit equal opportunities for the whole community (see Policy T4).

**7.15** Accessibility for disabled people is legislated under the Disability Discrimination Act (DDA) 1995 (amendment) Regulations 2003, and is included within the London Plan. The requirement is for new and existing buildings to be accessible. New housing should be designed to ensure that it can easily be modified to meet the needs of people with disabilities. It should also incorporate the principles of "Lifetime Homes" so that as people become less mobile it continues to meet their needs. All new housing proposals were required to meet Lifetime Home Standards in 2010/11. 10% of all housing units on major planning applications (10 units or more) were also required to be wheelchair accessible. Records show that out of the approval of a net total 1,353 units in 2010/11, approximately 98.5% were Lifetime Homes and 14% were Wheelchair Homes.

**7.16** The Council will seek to encourage inclusive access at the neighbourhood level ensuring that places of work and leisure, streets, neighbourhoods, parks and open spaces are designed to meet the needs of the community at all stages of people's lives in line with the London Plan (2011).

**Policy BE1:** Built Environment this replaces UDP policy Pt 1.16 and notes at sub-sections 3 and 4 that all new developments should:

**3)** be designed to include "Lifetime Homes" principles so that they can be readily adapted to meet the needs of those with disabilities and the elderly, 10% of these should be wheelchair accessible or easily adaptable to wheelchair accessibility encouraging places of work and leisure, streets, neighbourhoods, parks and open spaces to be designed to meet the needs of the community at all stages of people's lives.

**4)** in the case of 10 dwellings or over, achieve a Building for Life assessment rating of' silver' as a minimum.

**Policy CI1:** Community Infrastructure Provision notes at sub-section 9 that the Council will ensure that community and social infrastructure is provided to cater for the needs of the existing community and future populations by:

**9)** providing facilities and services that are accessible and inclusive to all potential users regardless of age, ability, gender or socio-economic status.

**Hillingdon Local Plan: Part 2**
As explained above, the following existing policies from the UDP Saved Policies 2007 are currently being used as Part 2 of the Local Plan and cover accessibility issues: AM13 / AM15 / AM16 / OL19 / LE1 / R16.

Accessible Hillingdon supplements the UDP policies set out below:

**Policy AM13**
The Local Planning Authority will seek to ensure that proposals for development increase ease and spontaneity of movement for elderly people, the frail and people with disabilities by including where appropriate:

(i) improved Dial-a-Ride and Mobility Bus services together with suitable means for people with disabilities and people dependent on wheelchairs for mobility to use public transport.

(ii) shopmobility schemes.

(iii) adequate and convenient parking spaces for people with disabilities, especially around shopping areas and entertainment and recreation facilities.

(iv) measures to incorporate the needs of people with disabilities into road, footway, parking and pedestrianisation schemes; including benches, public lavatories, footpath surfaces, dropped kerbs and textured crossings, with proper regard to the siting and visibility of street furniture.

**Policy AM15**
All car parks provided for new development shall contain conveniently located reserved spaces for disabled persons in accordance with the council's adopted car parking standards, as set out in Annex 1.

**Policy AM16**
In the context of the Council's adopted parking standards the Local Planning Authority will, where appropriate, seek to make parking spaces (including disabled persons' spaces) provided as part of commercial development schemes in town centres and other areas to be available for use by the public.

**Policy OL19**
The Council will seek to improve access to and use of the countryside by all sections of the community, including improving access for wheelchairs and people with other forms of disability.

**Policy LE1**
All proposals for industry (b 2), warehousing (b8) and business (b1) development will be assessed by taking into account other policies of this plan and, where appropriate, the following considerations:-

(i) whether the proposal conflicts with the local planning authority's overall objective of securing the development or regeneration of an area.

(ii) outstanding, unimplemented planning permissions, development under construction and vacant floor space elsewhere in the plan area.

(iii) the availability and capacity of public transport facilities to serve proposals for employment intensive uses.

(iv) the ability of the road system, as existing or taking due account of committed improvements, to accommodate at normal peak hours the additional traffic generated.

(v) whether any proposal for major development will create unacceptable demands for other land to be developed (for example, to provide for new ho using or community facilities).

(vi) the provision for access by people with disabilities and other accessible facilities both to and within buildings.

**Policy R16**
The local planning authority will only permit proposals for shops, business uses, services, community and other facilities open to the public if they include adequate provision for accessibility, in particular those of elderly people, people with disabilities, women and children. Where appropriate to the scale and nature of the development proposed, new development should include:-

(i) safe and convenient access by public and private transport and on foot.

(ii) safe and convenient means of physical access to all floors.

(iii) facilities for child and baby care accessible for male and female carers; and toilets accessible to people with disabilities; and have regard to the measures set out in policies AM13 (i) - (iv) and R17.

**2016 LONDON PLAN**

**Policy 3.1**
Ensuring Equal Life Chances for All

**Strategic**
**A** The Mayor is committed to ensuring equal life chances for all Londoners. Meeting the needs and expanding opportunities for all Londoners – and where appropriate, addressing the barriers to meeting the needs of particular groups and communities – is key to tackling the huge issue of inequality across London.

**Planning decisions**

**B** Development proposals should protect and enhance facilities and services that meet the needs of particular groups and communities. Proposals involving loss of these facilities without adequate justification or provision for replacement should be resisted.

**Policy 3.5**

Quality and Design of Housing Developments

**Strategic**

**A** Housing developments should be of the highest quality internally, externally and in relation to their context and to the wider environment, taking account of strategic policies in this Plan to protect and enhance London's residential environment and attractiveness as a place to live. Boroughs may in their LDFs introduce a presumption against development on back gardens or other private residential gardens where this can be locally justified.

**Planning decisions and LDF preparation**

**B** The design of all new housing developments should enhance the quality of local places, taking into account physical context; local character; density; tenure and land use mix; and relationships with, and provision of, public, communal and open spaces, taking particular account of the needs of children and older people.

**C** LDFs should incorporate minimum space standards that generally conform with Table 3.3. The Mayor will, and boroughs should, seek to ensure that new development reflects these standards. The design of all new dwellings should also take account of factors relating to 'arrival' at the building and the 'home as a place of retreat'. New homes should have adequately sized rooms and convenient and efficient room layouts which are functional and fit for purpose, meet the changing needs of Londoners over their lifetimes, address climate change adaptation and mitigation and social inclusion objectives and should be conceived and developed through an effective design process.

**D** Development proposals which compromise the delivery of elements of this policy may be permitted if they are demonstrably of exemplary design and contribute to achievement of other objectives of this Plan.

**E** The Mayor will provide guidance on implementation of this policy that is relevant to all tenures.

**Policy 3.8**

**Strategic**

**A** Londoners should have a genuine choice of homes that they can afford and which meet their requirements for different sizes and types of dwellings in the highest quality environments.

**LDF preparation and planning decisions**

**B** To inform local application of Policy 3.3 on housing supply and taking account of housing requirements identified at regional, sub-regional and local levels, boroughs should work with the Mayor and local communities to identify the range of needs likely to arise within their areas and ensure that:

**a** new developments offer a range of housing choices, in terms of the mix of housing sizes and types, taking account of the housing requirements of different groups and the changing roles of different sectors in meeting these.

**a1** the planning system provides positive and practical support to sustain the contribution of the Private Rented Sector (PRS) in addressing housing needs and increasing housing delivery.

**b** provision of affordable family housing is addressed as a strategic priority in LDF policies.

**c** ninety percent of new housing[1]meets Building Regulation requirement M4 (2) 'accessible and adaptable dwellings'.

**d** ten percent of new housing[2] meets Building Regulation requirement M4 (3) 'wheelchair user dwellings', i.e. is designed to be wheelchair accessible, or easily adaptable for residents who are wheelchair users.

**e** account is taken of the changing age structure of London's population and, in particular, the varied needs of older Londoners, including for supported and affordable provision.

**f** account is taken of the needs of particular communities with large families.

**g** other supported housing needs are identified authoritatively and co-ordinated action is taken to address them in LDF and other relevant plans and strategies.

**h** strategic and local requirements for student housing meeting a demonstrable need, are addressed by working closely with stakeholders in higher and further education and without compromising capacity for conventional homes.

**i** the accommodation requirements of gypsies and travellers (including travelling show people) are identified and addressed, with sites identified in line with national policy, in coordination with neighbouring boroughs and districts as appropriate.

**j** appropriate provision is made for the accommodation of service families and custom build, having regard to local need.

**Policy 4.5**
London's visitor infrastructure

**A** The Mayor will, and boroughs and relevant stakeholders should:

**a** support London's visitor economy and stimulate its growth, taking into account the needs of business as well as leisure visitors and seeking to improve the range and quality of provision especially in outer London.

**b** seek to achieve 40,000 net additional hotel bedrooms by 2036, of which at least 10 percent[1] should be wheelchair accessible.

**c** ensure that new visitor accommodation is in appropriate locations:
beyond the Central Activities Zone (CAZ) it should be focussed in town centres and opportunity and intensification areas, where there is good public transport access to central London and international and national transport termini within the CAZ strategically important hotel provision should be focussed on its opportunity areas, with smaller scale provision in CAZ fringe locations with good public transport.

Further intensification of provision in areas of existing concentration should be resisted, except where this will not compromise local amenity or the balance of local land uses.
It may be appropriate to locate visitor accommodation related to major visitor attractions of sub-regional or greater significance in locations other than those set out in this paragraph, but only where it can be shown that no suitable site in one of these locations exists and that there is a clear link in scale, nature and location (particularly demonstrating sufficient proximity to minimise the overall need to travel and maximise walking and cycling) between the accommodation and the attraction being served.

**d** support provision for business visitors, including high quality, large scale convention facilities in or around the CAZ.

**e** recognise the need for apart-hotels in the context of the broader policies of this Plan.

**f** promote, enhance and protect the special characteristics of major clusters of visitor attractions including those identified in Strategic Cultural Areas in Map 4.2.

**Policy 4.6**
Support For And Enhancement Of Arts, Culture, Sport And Entertainment

**Strategic**
**A** The Mayor will and boroughs and other stakeholders should support the continued success of London's diverse range of arts, cultural, professional sporting and entertainment enterprises and the cultural, social and economic benefits that they offer to its residents, workers and visitors.

**Planning decisions**
**B** Developments should:

**a** fulfil the sequential approach and where necessary, complete an impact assessment (see Policy 4.7).

**b** be located on sites where there is good existing or planned access by public transport.

**c** be accessible to all sections of the community, including disabled and older people.

**d** address deficiencies in facilities and provide a cultural focus to foster more sustainable local communities.

**Policy 4.12**
Improving Opportunities For All

**Strategic**

**A** Working with strategic partners, principally the London Enterprise Partnership, the Mayor will provide the spatial context to co-ordinate the range of national and local initiatives necessary to improve employment opportunities for Londoners, to remove barriers to employment and progression and to tackle low participation in the labour market.

**Planning decisions**

**B** Strategic development proposals should support local employment, skills development and training opportunities.

**Policy 7.1**
Lifetime neighbourhoods

**Strategic**

**A** In their neighbourhoods, people should have a good quality environment in an active and supportive local community based on the lifetime neighbourhoods principles set out in paragraph 7.4A.

**Planning decisions**

**B** Development should be designed so that the layout, tenure and mix of uses interface with surrounding land and improve people's access to social and community infrastructure (including green spaces), the Blue Ribbon Network, local shops, employment and training opportunities, commercial services and public transport.

**C** Development should enable people to live healthy, active lives; should maximize the opportunity for community diversity, inclusion and cohesion; and should contribute to people's sense of place, safety and security. Places of work and leisure, streets, neighbourhoods, parks and open spaces should be designed to meet the needs of the community at all stages of people's lives, and should meet the principles of lifetime neighbourhoods.

**D** The design of new buildings and the spaces they create should help reinforce or enhance the character, legibility, permeability, and accessibility of the neighbourhood.

**E** The policies in this chapter provide the context within which the targets set out in other chapters of this Plan should be met.

**LDF preparation**

**F** Boroughs should plan across services to ensure the nature and mix of existing and planned infrastructure and services are complementary and meet the needs of existing and new communities. Cross-borough and/or sub-regional working is encouraged, where appropriate.

**G** Boroughs should work with and support their local communities to set goals or priorities for their neighbourhoods and strategies for achieving them through neighbourhood planning mechanisms.

**Policy 7.2**
An Inclusive Environment

**Strategic**

**A** The Mayor will require all new development in London to achieve the highest standards of accessible and inclusive design and supports the principles of inclusive design which seek to ensure that developments:

**a** can be used safely, easily and with dignity by all regardless of disability, age, gender, ethnicity or economic circumstances.

**b** are convenient and welcoming with no disabling barriers, so everyone can use them independently without undue effort, separation or special treatment.

**c** are flexible and responsive taking account of what different people say they need and want, so people can use them in different ways.

**d** are realistic, offering more than one solution to help balance everyone's needs, recognising that one solution may not work for all.

**B** The Mayor will assist boroughs and other agencies in implementing accessible and inclusive design in all development proposals by updating the advice and guidance in the Supplementary Planning Guidance 'Accessible London: Achieving an inclusive environment'; by continuing to contribute to the development of national technical access standards and by supporting training and professional development programmes.

**Planning decisions**

**C** Design and access statements submitted with development proposals should explain how, following engagement with relevant user groups, the principles of inclusive design, including the specific needs of older and disabled people, have been integrated into the proposed development, whether relevant best practice standards such as British Standard BS 8300:2009 have been complied with, and how inclusion will be maintained and managed.

**LDF preparation**

**D** Boroughs should develop detailed policies and proposals in consultation with user groups that ensure the physical environment can meet the highest standards of accessibility and inclusion and that the principles of inclusive design are adopted at the earliest stages of the development process including when drawing up masterplans, area planning frameworks and development briefs.

**NATIONAL PLANNING POLICY FRAMEWORK (NPPF)**

**50.** To deliver a wide choice of high quality homes, widen opportunities for home ownership and create sustainable, inclusive and mixed communities, local planning authorities should:

(i) plan for a mix of housing based on current and future demographic trends, market trends and the needs of different groups in the community (such as, but not limited to, families with children, older people, people with disabilities, service families and people wishing to build their own homes).

(ii) identify the size, type, tenure and range of housing that is required in particular locations, reflecting local demand; and

(iii) where they have identified that affordable housing is needed, set policies for meeting this need on site, unless off-site provision or a financial contribution of broadly equivalent value can be robustly justified, (for example to improve or make more effective use of the existing housing stock) and the agreed approach contributes to the objective of creating mixed and balanced communities. Such policies should be sufficiently flexible to take account of changing market conditions over time.

**56.** The Government attaches great importance to the design of the built environment. Good design is a key aspect of sustainable development, is indivisible from good planning, and should contribute positively to making places better for people.

**61.** Although visual appearance and the architecture of individual buildings are very important factors, securing high quality and inclusive design goes beyond aesthetic considerations. Therefore, planning policies and decisions should address the connections between people and places and the integration of new development into the natural, built and historic environment.

**69.** The planning system can play an important role in facilitating social interaction and creating healthy, inclusive communities. Local planning authorities should create a shared vision with communities of the residential environment and facilities they wish to see. To support this, local planning authorities should aim to involve all sections of the community in the development of Local Plans and in planning decisions, and should facilitate neighbourhood planning. Planning policies and decisions, in turn, should aim to achieve places which promote:

- opportunities for meetings between members of the community who might not otherwise come into contact with each other, including through mixed-use developments, strong neighbourhood centres and active street frontages which bring together those who work, live and play in the vicinity

- safe and accessible environments where crime and disorder, and the fear of crime, do not undermine quality of life or community cohesion; and

- safe and accessible developments, containing clear and legible pedestrian routes, and high quality public space, which encourage the active and continual use of public areas

# Glossary

**Unitary Development Plan**
The Unitary Development Plan (UDP) is part of the development plan for Hillingdon and contains a series of policies used for the determination of planning applications. Policies in the UDP were 'Saved' by the Sectary of State in 2007 and a number have been replaced by those contained in the Local Plan Part 1: Strategic Policies.

**The Hillingdon Local Plan**
Hillingdon's Local Plan is divided in to two parts: The Local Plan: Part 1- Strategic Policies was adopted by the Council in November 2012 and is the key strategic planning document for the borough. It sets out a long-term vision and objectives for Hillingdon and contains broad policies for steering and shaping development.

The Local Plan Part 2 will comprise:

- A Development Management Policies Document: containing updated detailed development management policies for determining planning applications; and

- A Site Allocations Document and Proposals Map; which will identify particular sites for development and land use designations in the borough Consultation on the Local Plan Part 2 will commence in the first quarter of 2013.

**Supplementary Planning Document**
Supplementary Planning Documents expand on policies set out in Development Plan Documents, or provide additional detail.

**Access Statement**
An Access Statement enables the developer/applicant to explain the constraints of the scheme and the solutions introduced to provide a satisfactory outcome.

**Design Statement**
A Design Statement demonstrates how the principles of Design have been incorporated within proposals, will Illustrate their impacts and explain why the design has been considered.

# Sources & References

**Accessible Facilities, Sport England**
www.sportengland.org/facilities-planning/tools-guidance/design-and-cost-guidance/accessible-facilities

**The Access Manual by Ann Sawyer and Keith Bright, published by Wiley Blackwell**
www.wiley.com//legacy/wileychi/sawyer

**Building Bulletin 94:** inclusive school design:
Accommodating pupils with Special Educational Needs and disabilities in mainstream schools DfEE 2001 www.teachernet.gov.uk

**Designing for Accessibility – Centre for Accessible Environments 2012**
www.cae.org.uk

**English Heritage** – Easy Access to Historic Buildings and Easy Access to Historic Landscapes June 2015 www.english-heritage.org.uk

**Guidance on the Use of Tactile Paving Surfaces**
www.gov.uk/government/publications/guidance-on-the-use-of-tactile-paving-surfaces

**Department for Transport 2007**
www.dft.gov.uk

**Planning and Access for Disabled People: A Good Practice Guide ODPM, March 2000**
www.communities.gov.uk

**National Wheelchair Housing Association Group (HATWHAG) Wheelchair Housing Design Guide Second edition 2006**
www.habinteg.org.uk

**Access Statements** – achieving and inclusive environment by ensuring continuity throughout the planning, design and management of buildings and spaces – Disability Rights Commission 2004 www.equalityhumanrights.com

**Approved Document M (2016 edition) to the Building Regulations.**
www.planningportal.gov.uk

**Building Bulletin 95:** Schools for Future, Designs for Learning Communities 2002
www.teachernet.gov.uk

**Good Loo Design Guide Centre for Environments 2004**
www.cae.org.uk

**English Heritage 1995 2004**
www.english-heritage.org.uk

**Inclusive Mobility:** a guide to best practice on access to pedestrian and transport infrastructure Mobility and inclusion Unit Department for Transport 2002 www.dft.gov.uk

**Living Well Together,** achieving sustainable, flexible homes within high density neighbourhoods Habinteg, London authority, 2003 www.habinteg.org.uk

**Scheme Development Standards:** The Housing Corporation, 2003
www.housingcorop.gov.uk

**Accessible thresholds in new housing** – Guidance for house builders and developers' 1999
www.ribabookshops.com

**British Standard BS 8300: 2009+A1:2010** – Code of Practice for design of buildings and their approaches to meet the needs of disabled people BSI 2009 www.jmuaccess.org.uk

**Developing Accessible Play Space: A Good Practice Guide ODPM 2003**
www.fieldfare.org.uk/public.htm

**Inclusive Projects:** a guide to best practice on preparing and delivering project briefs to secure access DPTAC 2003
www.dptac.gov.uk

**Sign Design Guide:** a guide to inclusive signage JMU and the Sign Design Society 2000
www.jmuaccess.org.uk

**Greater London Authority Housing Supplementary Planning Guidance November 2012**
www.london.gov.uk

Published by Hillingdon Council

May 2018
12900